55-1905-217-34 P

TM 55-1905-217-34P

TECHNICAL MANUAL

DIRECT AND GENERAL SUPPORT MAINTENANCE
REPAIR PARTS AND SPECIAL TOOLS LIST
(INCLUDING DEPOT MAINTENANCE REPAIR PARTS AND SPECIAL TOOLS)
LANDING CRAFT, MECHANIZED, STEEL; DED; OVERALL LENGTH 74 FEET; MOD I MARK VIII, NAVY DESIGN
LCM-8
(GUNDERSON BROS ENGINEERING CORP, MARINETTE MARINE CORP AND ROHR CORP
FSN 1905-935-6057

This copy is a reprint which includes current pages from Changes 1 and 2.

HEADQUARTERS, DEPARTMENT OF THE ARMY
JUNE 1973

D 101.11:

READEX MICRO best copy available

CHANGE
No. 1

HEADQUARTERS
DEPARTMENT OF THE ARMY
WASHINGTON, DC, *5 January 1976*

Direct Support and General Support Maintenance Repair Parts and Special Tools List (Including Depot Maintenance Repair Parts and Special Tools)

LANDING CRAFT, MECHANIZED, STEEL; DED; OVERALL LENGTH 74 FEET; MOD I MARK VIII, NAVY DESIGN LCM-8 (GUNDERSON BROS. ENGINEERING CORP, MARINETTE MARINE CORP AND ROHR CORP) NSN 1905-00-935-6057

Current as of 9 September 1975

TM 55-1905-217-34P, 8 June 1973, is changed as follows:

The title is changed as shown above.

NOTE

All "Federal Stock Numbers" appearing in this publication should be corrected to the new "National Stock Numbers" before using. This can be done by inserting -00- after the Federal Stock Class. For example, Federal Stock Number 6115-937-0929 will be corrected to the following National Stock Number: 6115-00-937-0929. Wherever the words "Federal Stock Number" appear throughout the publication, correct to read "National Stock Number."

Page viii. Paragraph 7 is superseded as follows:

7. Reporting of Errors

You can improve this manual by recommending improvements using DA Form 2028 (Recommended Changes to Publications and Blank Forms) and/or DA Form 2028-2 (TEST) located in the back of the manual and mail the form direct to Commander, US Army Troop Support Command, ATTN: AMSTS-MPP, 4300 Goodfellow Blvd., St. Louis, MO 63120. A reply will be furnished direct to you.

Page 40. Following line item 20, add the following:

PAOZZ — NSN 2815-00-938-5760 —	Cooler, Fuel Oil P/N 5136348, M/C (72582)	C — EA — 4 — 22 — 37

Page 45. Delete line items 4, 5, 6, 7, and 20 in their entirety.

Following line item 3, add the following:

PBOZZ —	— Muffler Assembly: w/baffle, cres 3/16 in., P/N 205-4510947-55, M/C (75301)	C — EA — 4 — 25 — 8

Following line item 19, add the following:

PBOZZ —	— Muffler Assembly: w/baffle, cres 3/16 in., P/N 205-4510947-55, M/C (75301)	C — EA — 4 — 25 — 18

Page 74, line item 9, column 1. Change "PAOZZ" to read "PAOHH".

Column 2. Change "2815-587-3400" to read "NSN 2815-00-587-3400".

Page 76, line item 11, column 1. Change "PAOHH" to read "PAOZZ".

Column 2. Change "4320-689-3037" to read "NSN 4320-00-689-3037".

Page 79, line item 2, column 2. Change "2990-895-3407" to read "NSN 2520-00-406-3260".

Page 229, line item 13, column 2. Change "2010-127-4796" to read "NSN 2010-00-127-4796".

Column 3. For Shaft, Propeller, following P/N MMC42M3 (98042), add "with monel sleeve".

Under Usable on code, add "AB".

Following line item 13, add the following:

PAOHH —	— Shaft, Propeller, Bronze, P/N 245-4510951-M-3 (80064) with monel sleeve	C — EA — 2 — 150 — 13

Page 298, figure 22. Add item number 37 with arrow pointing to piping between item numbers 29 and 30.

RECOMMENDED CHANGES TO EQUIPMENT TECHNICAL MANUALS

SOMETHING WRONG WITH THIS MANUAL?

THEN. . .JOT DOWN THE DOPE ABOUT IT ON THIS FORM, TEAR IT OUT, FOLD IT AND DROP IT IN THE MAIL!

FROM: (YOUR UNIT'S COMPLETE ADDRESS)
PFC JOHN DOE
CoA, 3d ENGINEER BN
FT. LEONARD WOOD MO 63108

DATE: 16 DEC 74

PUBLICATION NUMBER	DATE	TITLE
TM5-6115-200-20 AND P	1 APR 72	GENERATOR SET 10 KW NSN 6115-00-231-7286

BE EXACT. . .PIN-POINT WHERE IT IS				IN THIS SPACE TELL WHAT IS WRONG AND WHAT SHOULD BE DONE ABOUT IT:
PAGE NO.	PARAGRAPH	FIGURE NO.	TABLE NO.	
6	2-1 a			In line 6 of paragraph 2-1a the manual states the engine has 6 cylinders. The engine on my set only has 4 cylinders. Change the manual to show 4 cylinders
81		4-3		Callout 16 on figure 4-3 is pointing at a bolt. In the key to fig. 4-3, item 16 is called a shim. Please correct one or the other.
125	line 20			I ordered a gasket, item 19 on figure B-16 by NSN 2910-00-762-3001. I got a gasket but it doesn't fit. Supply says I got what I ordered so the NSN is wrong. Please give me a good NSN

SAMPLE

TYPED NAME, GRADE OR TITLE, AND TELEPHONE NUMBER	SIGN HERE:
JOHN DOE, PFC (268) 317-7111	John Doe

DA FORM 1 AUG 74 2028-2 (TEST)

P.S.--IF YOUR OUTFIT WANTS TO KNOW ABOUT YOUR MANUAL "FIND," MAKE A CARBON COPY OF THIS AND GIVE IT TO YOUR HEADQUARTERS.

TEAR ALONG DOTTED LINE

FILL IN YOUR UNIT'S ADDRESS

FOLD BACK

DEPARTMENT OF THE ARMY

OFFICIAL BUSINESS

PENALTY FOR PRIVATE USE, $300

POSTAGE AND FEES PAID
DEPARTMENT OF THE ARMY
DOD-314

Commander
U.S. Army Troop Support Command
ATTN: AMSTS-MPP
4300 Goodfellow Boulevard
St. Louis, Missouri 63120

TEAR ALONG DOTTED LINE

FOLD BACK

REVERSE OF DA FORM 2028-2 (TEST)

RECOMMENDED CHANGES TO EQUIPMENT TECHNICAL MANUALS

SOMETHING WRONG WITH THIS MANUAL?

THEN... JOT DOWN THE DOPE ABOUT IT ON THIS FORM, CUT IT OUT, FOLD IT AND DROP IT IN THE MAIL!

FROM: (YOUR UNIT'S COMPLETE ADDRESS)

DATE

PUBLICATION NUMBER	DATE	

BE EXACT. . .PIN-POINT WHERE IT IS

PAGE NO.	PARAGRAPH	FIGURE NO.	TABLE NO.

IN THIS SPACE TELL WHAT IS WRONG AND WHAT SHOULD BE DONE ABOUT IT:

TYPED NAME, GRADE OR TITLE, AND TELEPHONE NUMBER	SIGN HERE:

CUT ALONG DOTTED LINE

DA FORM 1 AUG 74 2028-2 (TEST)

P.S.--IF YOUR OUTFIT WANTS TO KNOW ABOUT YOUR MANUAL "FIND," MAKE A CARBON COPY OF THIS AND GIVE IT TO YOUR HEADQUARTERS.

FILL IN YOUR UNIT'S ADDRESS

FOLD BACK

DEPARTMENT OF THE ARMY

OFFICIAL BUSINESS

PENALTY FOR PRIVATE USE, $300

POSTAGE AND FEES PAID
DEPARTMENT OF THE ARMY
DOD-314

Commander
U.S. Army Troop Support Command
ATTN: AMSTS-MPP
4300 Goodfellow Boulevard
St. Louis, Missouri 63120

TEAR ALONG DOTTED LINE

FOLD BACK

REVERSE OF DA FORM 2028-2 (TEST)

RECOMMENDED CHANGES TO EQUIPMENT TECHNICAL MANUALS

SOMETHING WRONG WITH THIS MANUAL?

THEN... JOT DOWN THE DOPE ABOUT IT ON THIS FORM, CUT IT OUT, FOLD IT AND DROP IT IN THE MAIL!

FROM: (YOUR UNIT'S COMPLETE ADDRESS)

DATE

PUBLICATION NUMBER	DATE	

BE EXACT...PIN-POINT WHERE IT IS

PAGE NO.	PARAGRAPH	FIGURE NO.	TABLE NO.

IN THIS SPACE TELL WHAT IS WRONG AND WHAT SHOULD BE DONE ABOUT IT:

TYPED NAME, GRADE OR TITLE, AND TELEPHONE NUMBER	SIGN HERE:

CUT ALONG DOTTED LINE

DA FORM 1 AUG 74 2028-2 (TEST)

P.S.--IF YOUR OUTFIT WANTS TO KNOW ABOUT YOUR MANUAL "FIND," MAKE A CARBON COPY OF THIS AND GIVE IT TO YOUR HEADQUARTERS.

FILL IN YOUR UNIT'S ADDRESS

FOLD BACK

DEPARTMENT OF THE ARMY

OFFICIAL BUSINESS

PENALTY FOR PRIVATE USE, $300

POSTAGE AND FEES PAID
DEPARTMENT OF THE ARMY
DOD-314

Commander
U.S. Army Troop Support Command
ATTN: AMSTS-MPP
4300 Goodfellow Boulevard
St. Louis, Missouri 63120

TEAR ALONG DOTTED LINE

FOLD BACK

REVERSE OF DA FORM 2028-2 (TEST)

RECOMMENDED CHANGES TO EQUIPMENT TECHNICAL MANUALS

SOMETHING WRONG WITH THIS MANUAL?

THEN... JOT DOWN THE DOPE ABOUT IT ON THIS FORM, CUT IT OUT, FOLD IT AND DROP IT IN THE MAIL!

FROM: (YOUR UNIT'S COMPLETE ADDRESS)

DATE

PUBLICATION NUMBER	DATE	

BE EXACT...PIN-POINT WHERE IT IS

PAGE NO.	PARAGRAPH	FIGURE NO.	TABLE NO.

IN THIS SPACE TELL WHAT IS WRONG AND WHAT SHOULD BE DONE ABOUT IT:

TYPED NAME, GRADE OR TITLE, AND TELEPHONE NUMBER	SIGN HERE:

CUT ALONG DOTTED LINE

DA FORM 1 AUG 74 2028-2 *(TEST)*

P.S.--IF YOUR OUTFIT WANTS TO KNOW ABOUT YOUR MANUAL "FIND," MAKE A CARBON COPY OF THIS AND GIVE IT TO YOUR HEADQUARTERS.

FILL IN YOUR UNIT'S ADDRESS

FOLD BACK

DEPARTMENT OF THE ARMY

OFFICIAL BUSINESS

PENALTY FOR PRIVATE USE, $300

POSTAGE AND FEES PAID
DEPARTMENT OF THE ARMY
DOD-314

Commander
U.S. Army Troop Support Command
ATTN: AMSTS-MPP
4300 Goodfellow Boulevard
St. Louis, Missouri 63120

TEAR ALONG DOTTED LINE

FOLD BACK

REVERSE OF DA FORM 2028-2 (TEST)

By Order of the Secretary of the Army:

FRED C. WEYAND
General, United States Army
Chief of Staff

Official:

PAUL T. SMITH
Major General, United States Army
The Adjutant General

Distribution:

To be distributed in accordance with DA Form 12-25D, (qty rqr block No. 815) Direct and General Support maintenance requirements for Marine Equipment, ALL.

CHANGE
NO. 2

HEADQUARTERS
DEPARTMENT OF THE ARMY
WASHINGTON, D.C., 3 November 1986

Direct Support and General Support Maintenance
Repair Parts and Special Tools List
(Including Depot Maintenance Repair Parts and Special Tools)

LANDING CRAFT, MECHANIZED, STEEL; DED;
OVERALL LENGTH 74 FEET; MOD I MARK VIII,
NAVY DESIGN LCM-8
(GUNDERSON BROS, ENGINEERING CORP,
MARINETTE MARINE CORP AND ROHR CORP)
NSN 1905-00-935-6057

TM 55-1905-217-34P, 8 June 1973, is changed as follows:

Page viii, paragraph 7 is superseded as follows:

7. Reporting Errors and Recommending Improvements.

You can help improve this manual. If you find any mistake or if you know of a way to improve the procedures, please let us know. Mail your letter, DA Form 2028 (Recommended Changes to Publications and Blank Forms), or DA Form 2028-2 located in the back of this manual direct to: Commander, U.S. Army Troop Support Command, ATTN: AMSTR-MCTS, 4300 Goodfellow Boulevard, St. Louis, MO 63120-1798. A reply will be furnished directly to you.

Page 1, figure 1, item no. 1, column 5. Change "24" to "12."

Page 1, add new item no. 9 to figure 1. Column 1 "PAOZZ." Column 2 "5306-00-418-2276." Column 3 "SCREW, CAP, HEXAGON HEAD: INLET AIR SILENCER MTG, 3/8-16 THD SIZE, 6 1/2 IN. LG" P/N "272547 (72582)." Column 4 "EA." Column 5 "12." Column 10a "1." Column 10b "9."

Page 161, figure 95, item no. 4. Column 2, add "6685-00-463-3399." Column 3, change "PATTERNDFMO-5000" to read "2-5DFM1-4CBM5000."

Page 272, figure 1, is superseded as follows.

By Order of the Secretary of the Army:

JOHN A. WICKHAM, JR.
General, United States Army
Chief of Staff

Official:

R. L. DILWORTH
Brigadier General, United States Army
The Adjutant General

DISTRIBUTION:
To be distributed in accordance with DA Form 12-25A, Direct and General Support Maintenance requirements for Landing Craft, Mechanized, Steel Design LCM-8, Model 1, Mark VII, 74 Ft (TM 55-1905-217 Series)

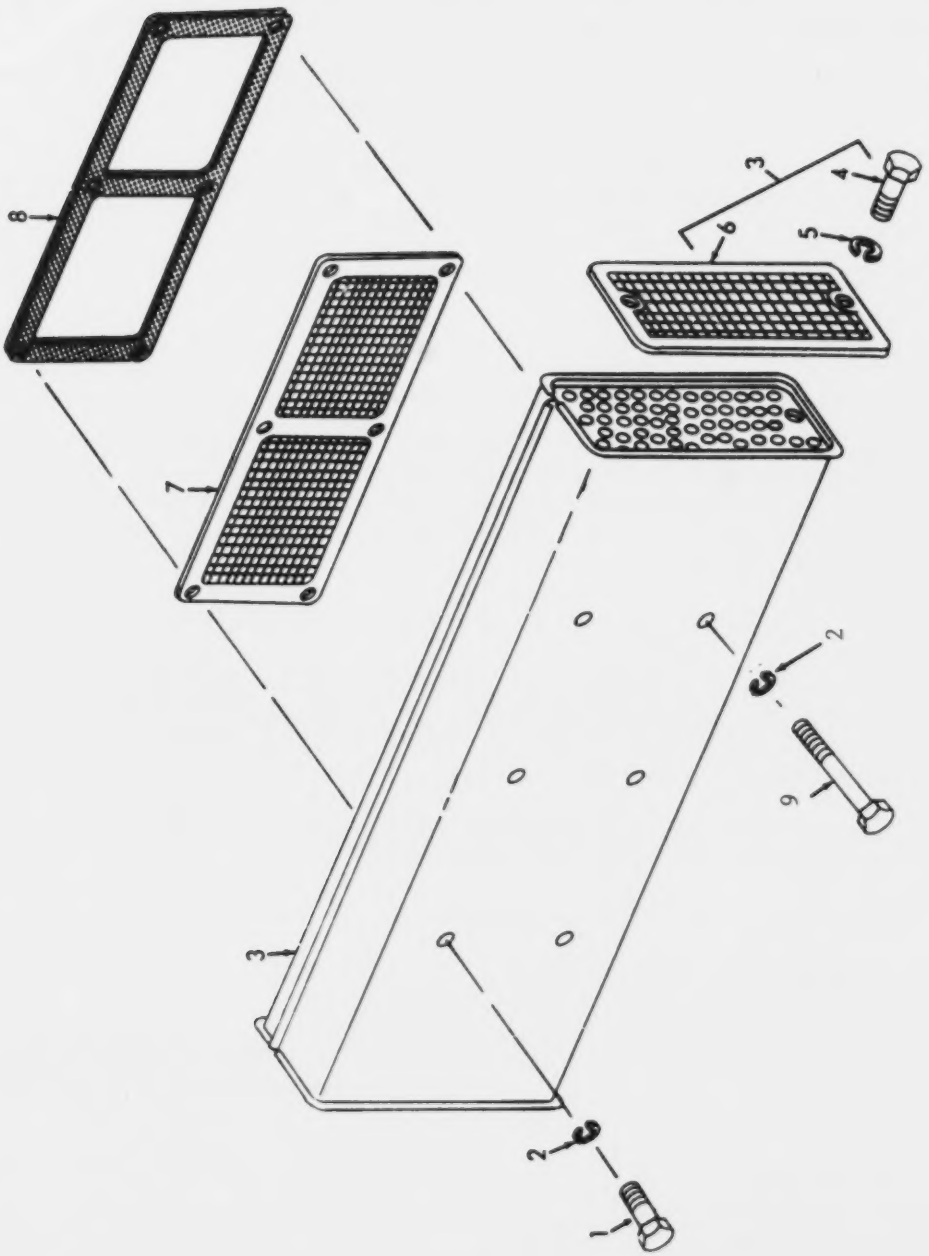

Figure 1. Air Inlet Silencer

Technical Manual
No. 55-1905-217-34P

HEADQUARTERS
DEPARTMENT OF THE ARMY
WASHINGTON, D.C. *8 June 1973*

**DIRECT AND GENERAL SUPPORT MAINTENANCE
REPAIR PARTS AND SPECIAL TOOLS LISTS
(INCLUDING DEPOT MAINTENANCE REPAIR
PARTS AND SPECIAL TOOLS)**

LANDING CRAFT, MECHANIZED, STEEL; DED; OVERALL LENGTH 74 FEET; MOD I MARK VIII, NAVY DESIGN LCM-8 (GUNDERSON BROS ENGINEERING CORP, MARINETTE MARINE CORP AND ROHR CORP) FSN 1905-935-6057

Current as of 30 March 1973

TABLE OF CONTENTS

			Page	Illus Figure
Section	I.	INTRODUCTION	v	
	II.	REPAIR PARTS LIST		
Group	01.	Air Inlet Silencer	1	1
	02.	Exhaust Manifold	3	2
	03.	Filter Assembly Oil	4	3
	04.	Oil Filter, Dipstick and Breather	5	4
	05.	Oil Cooler (Engine)	6	5
	06.	Fuel Filter Assembly	9	6
	07.	Fuel Strainer (Engine Mtg)	10	7
	08.	Fuel Strainer (Line)	11	8,9
	09.	Fuel Piping	13	10,11,12
	10.	Fuel Pump	20	13
	11.	Rocker Arm Cover	22	14
	12.	Fuel Injectors	22	15
	13.	Injector Control Tube	24	16
	14.	Throttle Controls	25	17
	15.	Heat Exchanger (Engine)	27	18
	16.	Engine Cooling Piping	29	19,20
	17.	Sea Water Piping	35	21,22,23
	18.	Muffler and Exhaust Piping	44	24,25
	19.	Fresh Water Pump	47	26
	20.	Raw Water Pump	49	27,28
	21.	Water Manifold, Engine	53	29
	22.	Sea Water Strainer	54	30
	23.	Keel Cooler	54	31,32
	24.	Engine Speed Governor	56	33
	25.	Blower Assembly	64	
		Blower assembly	34	
		Blower drive	35	

*This manual supersedes TM 55-1905-217-34P, 27 October 1970, including all changes.

		Page	Illus Figure
26.	Transmission Oil Filter	68	36
27.	Transmission Oil Strainer	69	37
28.	Transmission Oil Cooler Core and Plate Assembly	69	38
29.	Transmission Control Valve and Tubes	70	39
	Transmission Control Valve		40
30.	Tachometer Drive Cable, Adapter and Shaft	73	41
31.	Transmission Oil Pump	74	42
	Transmission Oil Pump and Lines		43
32.	Power Take-Off Assembly	78	44
	Power Take-Off Cover and Control Lever		45
33.	Alternator, Regulator and Voltage Protector	81	46
34.	Electric Cranking Motor	85	47,48
35.	Hydraulic Starting Piping System	92	49,50,51
36.	Starting Engine, Hydraulic	102	52
37.	Solenoid Valve, Starting Motor	103	53,54
38.	Pump Hydraulic Starter	106	55,56
39.	Accumulator, Hydraulic Starting	110	57
40.	Pump, Hand, Hydraulic Starting	111	58
41.	Filter, Oil, Hydraulic Starting	113	59, 60
42.	Transfer Gear Assembly	114	61
43.	Gear Assembly, Reverse	116	62
44.	Flywheel Housing	119	63
	Flywheel		64
45.	Power Take-Off Coupling and Vibration Damper	121	65
46.	Rocker Arm	123	66
47.	Cylinder Head	124	67
48.	Cam and Balance Sheet Bearing, Gears and Weights	125	68
49.	Idler Gears and Bearings	127	69
50.	Engine Lifting Brackets	128	70
51.	Oil Pan	129	71
52.	Oil Pump Assembly	130	72
53.	Piston and Connecting Rod	134	73
54.	Crankshaft	135	74
55.	Cylinder Block	136	75
56.	Engine Pilot House Controls	139	
	Pilot house levers, sprockets and chain		76
	Pulley terminal block		77
	Engine control levers and brackets		78
	Engine control unit		79
	Pilot house engine controls		80
	Brake, Free Wheeling		81
	Marine Control Elbow		82
	Pilot House Controls		83
	Pilot House Engine Controls		84
	Control Unit, Engine Throttle		85
	Fuel and Air Shutdown Control		86
	Engine Controls		87
57.	Fan Engine Boom	58	88,89
58.	Engine Control and Distribution Panel	59	
	Distribution panel		90,91
	Cables, gages and lights		92
	Indicator and lights		93
	Ether starting aid		94
	Instruments and plate		95
59.	Navigational Lights and Horn		96
	Forward and Main Mast		97
60.	Helm Unit Steering	166	
	Steering column		98
	Steering control		99
61.	Piping Steering	168	100,101,102, 103,104
62.	Pump, Steering	179	105,106
63.	Pump Drive (Coupling)	181	107
64.	Filters, Hydraulic	182	108,109

		Page	Illus Figure
65.	Valves, Steering	183	
	Valve, Check Steering		110
	Valve, by-pass Steering		111
66.	Valve, flow Divider	185	112
67.	Cylinder, Hydraulic Steering	186	113
68.	Tank Hydraulic	188	
	Tank, hydraulic		114,115
	Liquid level gage sightglass		116
	Tank, hydraulic		117
69.	Piping, Hydraulic Ramp Hoist	189	118,119,120, 121,122,123
70.	Pump, Hydraulic (Ramp)	203	124,125
71.	Winch Ramp Hoist (Marco)	206	
	Winch Brake		126
	Winch Gear Reduction		127
	Winch Base		128
	Ramp Brake Valve		129
	Ramp Hydraulic Motor		130
72.	Winch Ramp Hoist (Gearmatic)	211	
	Drum and Winch Base		131
	Hydraulic Motor		132
	Final Planet		133
	Final drive		134
	Primary drive assembly		135
	Primary planet		136
	Brake hub assembly		137
73.	Valve Ramp Control	216	138,139
74.	Filters Strainers	220	
	Filter hydraulic oil		140
	Strainer hydraulic oil		141
75.	Relief Valve	222	142
76.	Check Valve	223	143
77.	Counterbalance Valve	223	144
78.	Hand Pump Hydraulic	225	145,146
79.	Tanks, Hydraulic Oil Winch	226	147
80.	Cylinders Hydraulic (Ramp Latch)	227	
	Ramp Latches		148
	Cylinders, ramp latches		149
81.	Propeller Shaft	228	150
	Stuffing box and brace		151
82.	Indicator, Rudder Angle and Transmitter	230	152,153
83.	Rudder	231	
	Rudder and tiller		154,155
84.	Hull	234	
	Pilot house canopy		156
	Life lines, bitts, and ladders		157
	Miscellaneous hull components		158
85.	Piping, Bilge	252	159,160,161 162,163
86.	Pump, Bilge	261	164,165, 166,167
87.	Pump, Bilge Hand	268	168
88.	Compass System	268	169

Section III. SPECIAL TOOLS LIST (Not applicable)

IV. FEDERAL STOCK NUMBER AND REFERENCE NUMBER INDEX 455

Section I.
INTRODUCTION

1. Scope.

a. This manual lists repair parts, special tools, test and support equipment required for the performance of direct support, general support, and depot maintenance of the landing craft.

b. Repair parts listed represent those authorized for use at indicated maintenance levels and will be requisitioned on an "as required" basis until stockage is justified by demand in accordance with AR 710-2.

2. General.

This repair parts and special tools list is divided into the following sections:

a. Repair Parts List - Section II. A list of repair parts authorized at the direct support, general support, and depot levels for the performance of maintenance. The list also includes parts which must be removed for the replacement of the authorized parts. Parts lists are composed of assembly groups in ascending numerical sequence, with parts in each group listed in figure and item number sequence.

b. Special Tools, Test and Support Equipment - Section III. A list of special tools, test and support equipment authorized for the performance of maintenance at the direct support, general support, and depot level. (Not applicable).

c. Federal Stock Number and Reference Number Index - Section IV. A list, in ascending numerical sequence, of all Federal stock numbers appearing in the listings, followed by a list, in alpha-numeric sequence, of all reference numbers appearing in the listings. Federal stock number and reference numbers are cross-referenced to each illustration figure and/or item number appearance.

3. Explanation of Columns.

The following provides an explanation of columns found in the tabulated listings in Section III.

a. Source, Maintenance, and Recoverability Codes (SMR). The SMR code is a five letter code composed of three parts consisting of a two (2) position source code, a two (2) position maintenance code, and a one (1) position recoverability code. Support items listed in this RPSTL assigned maintenance and recoverability codes and no source code can be requisitioned, with justification, through a normal supply channels by use of the manufacturers code and part number. Such support items are NOT normally stocked.

(1) *Source Code.* Indicates the manner of acquiring support items for maintenance, repair, or overhaul of end items. Source codes are entered in the *first* and *second* positions as follows:

Code	*Definition*
PA	Item procured and stocked for anticipated or known usage.
PB	Item procured and stocked for insurance purposes because essentiality dictates that a minimum quantity be available in the supply system.
PC	Item procured and stocked and which otherwise would be coded PA except that it is deteriora- in nature.
PD	Support item, excluding support equipment, procured for initial issue or outfitting and stocked only for subsequent or additional initial issue or outfittings. NOT subject to automatic replenishment.
PE	Support equipment procured and stocked for initial issue or outfittings to specified maintenance repair activities.
PF	Support equipment which will not be stocked but which will centrally procured on demand.
PG	Item procured and stocked to provide for sustained support for life of the equipment. It is applied to an item peculiar to the equipment which, because of probably discontinuance or shutdown of production facilities, would prove uneconomical to reproduce at a later date.
KD	An item of depot overhaul/repair kit and not purchased separately.
KF	An item of a maintenance kit and not purchased separately.
KB	Item included in both a depot overhaul/repair kit and a maintenance kit.
MO	Item to be manufactured or fabricated at organizational level.
MF	Item to be manufactured or fabricated at direct support maintenance level.
MH	Item to be manufactured or fabricated at general maintenance support level.
MD	Item to be manufactured or fabricated at depot maintenance level.
AO	Item to be assembled at organizational level.

Code	Definition
AF	Item to be assembled at direct support maintenance level.
AH	Item to be assembled at general support maintenance level.
AD	Item to be assembled at depot maintenance level.
XA	Item is NOT procured or stocked because the requirements for the item will result in replacement of the next higher assembly.
XB	Item NOT procured or stocked. If not available through salvage, requisition.
XC	Installation drawing, diagram, instruction sheet, or field service drawing that is identified by manufacturer's part number.
XD	A low mortality item that is not stocked. When required, items will be requested and provided through normal supply channels.

NOTE

Cannibalization or salvage may be used as a source of supply for any items coded above *except* those coded XA and support items restricted by AR 700-42.

(2) *Maintenance Codes.* The maintenance code entered in the *third* position indicates the lowest maintenance level authorized to remove, replace, and use the item. The maintenance code entered in the *fourth* position indicates whether the item is to be repaired and identifies the lowest maintenance level with the capability to perform complete repair (i.e., all authorized maintenance functions). When a maintenance code is not used in the *fourth* position, a dash (-) will be entered.

Code	Application/Explanation
O	Item is removed, replaced, used (third position), or complete repair (fourth position) at the organizational level.
F	Item is removed, replaced, used (third position), or complete repair (fourth position) at the direct support maintenance level.
H	Item is removed, replaced, used (third position) or complete repair (fourth position) at the general support maintenance level.
D	Item is removed, replaced, used (third position) or complete repair (fourth position) at the depot maintenance level.
L	Repair restricted to designated specialized repair activity (fourth position).
Z	Non-repairable. No repairs authorized (fourth position).
B	No repair is authorized. The item may be reconditioned by adjusting, lubricating, etc., at the *user* level. No parts or special tools are procured for maintenance of this item (fourth position).

(3) *Recoverability Code.* The recoverability code entered in the *fifth* position indicates the disposition action on unserviceable items.

Code	Definition
Z	Non-repairable item. When unserviceable, condemn and dispose at the level indicated in position three (3).
C	Repairable item. When uneconomically repairable, condemn and dispose at organizational level.
F	Repairable item. When uneconomically repairable, condemn and dispose at direct support level.
H	Repairable item. When uneconomically repairable, condemn and dispose at general support level.
D	Repairable item. When beyond lower level repair capability, return to depot. Condemnation and disposal not authorized below depot level.
L	Repairable item. Repair, condemnation, and disposal not authorized below depot/specialized repair activity level.
A	Item requires special handling or condemnation procedures because of specific reasons (i.e., precious metal content, high dollar value, critical material, or hazardous material).

b. Federal Stock Number. Indicates the Federal stock number assigned to the item and will be used for requisitioning purposes.

c. Description. Indicates the Federal item name and a minimum description required to identify the item. The last line indicates the reference number followed by the applicable Federal Supply Code for Manufacturer (FSCM) in parenthesis. The FSCM is used as an element in item identification to designate manufacturer or distributor or Government agency, etc., and is identified in SB 708-42. Items that are included in kits and sets are listed below the name of the kit or set with quantity of each item in the kit or set indicated in front of the item name.

d. Unit of Measure (U/M). Indicates the standard or basic quantity by which the listed item is used in performing the actual maintenance function. This measure is expressed by a two-character alphabetical abbreviation, e.g., ea, in, pr, etc., and is the basis used to indicate quantities and allowances in subsequent columns.

e. Quantity Furnished with Equipment (Basic Issue Items Only). Indicates the quantity of the item furnished with the equipment.

f. 30-Day DS/GS Maintenance Allowances.

(1) Items authorized for use as required but not for initial stockage are identified with an asterisk in the allowance column.

(2) The allowance columns are divided into three subcolumns. The quantitative

allowance of special tools for DS/GS levels of maintenance will represent initial stockage for a 30-day period for the number of equipments supported. (Not applicable).

g. 1-Year Allowance Per 100 Equipments/Contingency Planning Purposes.

(1) Items authorized for use as required but not for initial stockage are identified with an asterisk in the allowance column.

(2) This column indicates the total quantity of special tools required for distribution and contingency planning purposes. (Not applicable).

h. Depot Maintenance Allowance per 100 Equipments.

(1) Items authorized for use as required but not for initial stockage are identified with an asterisk in the allowance column.

(2) This column indicates the total quantity of special tools authorized for depot maintenance of 100 equipments. (Not applicable).

i. Illustration. This column is divided as follows:

(1) *Figure number.* Indicates the figure number of the illustration on which the item is shown.

(2) *Item number.* Indicates the callout number used to reference the item in the illustration.

4. Special Information.

a. Usable on codes are included in Column 3. *Uncoded items are applicable to all models and/or serial number range.* Identifications of the usable on codes used in this publication are:

Code	Used On
A	Marinette Marine Corp LCM 8500 thru 8519
B	Gunderson Bros Engineering Corp LCM 8520 thru 8539
C	Rohr Corp LCM 8540 thru 8560 and 8580 thru 8619

b. The basis of issue for authorized special tools, test, and support equipment is the number of end items of equipment supported and the number of maintenance personnel allocated to perform the required maintenance operations.

c. Parts which require manufacture or assembly at a level higher than that authorized for installation will indicate in the source column the higher level.

d. Repair parts kits and gasket sets appear as the last entries in the repair parts listing for the group or assembly to which they apply.

e. Action change codes indicated in the left-hand margin of the listing page denote the following:

N - Indicates an added item.
C - Indicates a change in data.
R - Indicates a change in FSN only.

f. The following publications pertain to the landing craft and its components:

TM 55-1905-217-12	Operator and Organizational Maintenance Manual
TM 55-1905-217-20P	Organizational Maintenance Repair Parts and Special Tools Lists
TM 55-1905-217-34	Direct Support and General Support Maintenance Manual

5. How to Locate Repair Parts.

a. When Federal stock number or reference number is unknown:

(1) Using the table of contents determine the assembly group within which the repair part belongs. This is necessary since illustrations are prepared for assembly groups, and listings are divided into the same groups.

(2) Find the illustration covering the assembly group to which the repair part belongs.

(3) Identify the repair part on the illustration and note the illustration figure number and item number of the repair part.

(4) Using the repair parts listing, find the assembly group to which the repair part belongs and locate the illustration figure and item number noted on the illustration.

b. When the Federal stock number or reference number is known:

(1) Using the Index of Federal Stock Numbers and Reference Numbers find the pertinent Federal stock number and reference number. This index is in ascending FSN sequence followed by a list of reference numbers in ascending alpha-numeric sequence, cross-referenced to the illustration figure number and item number.

(2) Using the Repair Parts Listing, find

the assembly group of the repair part and the illustration figure number and item number referenced in the Index of Federal Stock Numbers and Reference Numbers.

6. Abbreviations.

amp ..... ampere(s)
cont ..... continuous
deg ..... degree(s)
ea ..... each
ft ..... foot (feet)
hex ..... hexagon
id ..... inside diameter
in ..... inch(es)
lb ..... pound
lg ..... length (long)
lh ..... left hand
mtg ..... mounting(s)
no ..... number
od ..... outside diameter
rh ..... right hand
sh ..... sheet
sq ..... square
thd ..... thread(s) (ed)
v ..... volt(s)
yd ..... yard(s)

7. Recommendations for Maintenance Publications Improvements.

You can improve this manual by calling attention to errors and by recommending improvements, using DA Form 2028 (Recommended Changes to Publications) or by a letter, and mailing direct to Commander, U. S. Army Troop Support Command, ATTN: AMSTS-MPP, St. Louis, Missouri 63120. A reply will be furnished directly to you.

(1) SMR CODE	(2) FEDERAL STOCK NUMBER	(3) DESCRIPTION REF NUMBER & MFR CODE / USABLE ON CODE	(4) UNIT OF MEAS	(5) QTY INC IN UNIT	(6) 30-DAY DS MAINT ALLOWANCE (a) 1-20	(b) 21-50	(c) 51-100	(7) 30-DAY GS MAINT ALLOWANCE (a) 1-20	(b) 21-50	(c) 51-100	(8) 1-YR ALW PER 100 EQUIP CNTGY	(9) DEPOT MAINT ALW PER 100 EQUIP	(10) ILLUSTRATION (a) FIG. NO.	(b) ITEM NO.
		SECTION II - REPAIR PARTS FOR DS, GS AND DEPOT MAINTENANCE												
		GROUP 01 - AIR INLET SILENCER												
PAOZZ	5305-206-6786	SCREW, CAP, HEXAGON HEAD: INLET AIR SILENCER MTG, 3/8-16 THD SIZE, 3 3/4 IN. LG 191249 (72582)	EA	24	•	•	•	•	•	•	•	•	1	1
PAOZZ	5310-637-9541	WASHER, LOCK: INLET AIR SILENCER MTG, 3/8 IN. SCREW SIZE MS35338-46 (96906)	EA	24	•	•	•	•	•	•	•	•	1	2
PAOZZ	2990-363-7395	SILENCER ASSEMBLY, AIR INLET 5189847 (72582)	EA	4	•	•	•	•	•	•	•	•	1	3
PAOZZ	5306-225-8494	BOLT, MACHINE: SCREEN MTG, 5/16-18 THD SIZE, 1/2 IN. LG 106973 (72582)	EA	16	•	•	•	•	•	•	•	•	1	4
PAOZZ	5310-407-9566	WASHER, LOCK: SCREEN MTG, 5/16 IN. SCREW SIZE MS35338-45 (96906)	EA	4	•	•	•	•	•	•	•	•	1	5
PAOZZ	2815-898-4228	SCREEN: AIR SILENCER 153776 (72582)	EA	8	•	•	•	•	•	•	•	•	1	6
KFOZZ		ELEMENT, STRAINER: BLOWER SCREEN 5111881 (72582) (PART OF GASKET SET, FSN 5330-379-4301)	EA	4									1	7
KFOZZ		GASKET: INLET AIR SILENCER MTG 3290572 (72582) (PART OF GASKET SET, FSN 5330-379-4301)	EA	4									1	8
PAFZZ	2815-511-2639	BLOWER, KIT INSTALLATION 5192754 (24617) (CONSISTS OF)	EA	1	•	•	•	•	•	•	•	•	1	
		1-SCREEN											1	7
		1-GASKET											1	8
		1-GASKET											13	2
		1-GASKET											33	3
		1-GASKET											33	6
		1-GASKET											33	22
		2-GASKET											33	69
		1-GASKET											35	3
		2-WASHER											35	5
		1-GASKET												
		1-SEAL												
		1-SEAL												
		1-CLAMP												
		1-PACKING												
		1-SEAL												
		1-CLAMP												
PCOZZ	5330-379-4301	GASKET SET, ENGINE OVERHAUL 5193115 (72582) (CONSISTS OF)	EA	4	•	•	•	•	•	•	•	•		
		1-ELEMENT											1	7
		1-GASKET											1	8

(1)	(2)	(3) DESCRIPTION		(4)	(5)	(6) 30-DAY DS MAINT ALLOWANCE			(7) 30-DAY GS MAINT ALLOWANCE			(8)	(9)	(10) ILLUSTRATION	
						(a)	(b)	(c)	(a)	(b)	(c)			(a)	(b)
SMR CODE	FEDERAL STOCK NUMBER	REF NUMBER & MFR CODE	USABLE ON CODE	UNIT OF MEAS	QTY INC IN UNIT	1-20	21-50	51-100	1-20	21-50	51-100	1-YR ALW PER 100 EQUIP CNTGY	DEPOT MAINT ALW PER 100 EQUIP	FIG. NO.	ITEM NO.
		2-GASKET												2	25
		1-GASKET												2	26
		1-GASKET												4	20
		1-PACKING												5	9
		1-GASKET												5	18
		1-GASKET												5	20
		2-GASKET												5	25
		1-WASHER												5	26
		1-WASHER												5	28
		2-GASKET												13	2
		4-WASHER												13	19
		2-GASKET												14	2
		2-GASKET												26	2
		1-PACKING												26	6
		1-GASKET												26	11
		1-PACKING												29	9
		6-GASKET												29	14
		4-GASKET												33	3
		2-GASKET												33	6
		1-GASKET												33	22
		1-GASKET												33	31
		2-GASKET												33	69
		2-GASKET												34	4
		1-GASKET												35	3
		1-WASHER												35	5
		1-BLOWER												35	8
		2-GASKET												38	12
		2-GASKET												38	14
		2-GASKET												41	4
		2-GASKET												55	5
		2-GASKET												63	12
		1-GASKET												63	26
		4-GASKET												67	14
		1-GASKET												67	16
		1-GASKET												67	17
		2-WASHER												67	18
		6-GASKET												67	19
		2-GASKET												67	20
		1-GASKET												68	11
		2-GASKET												70	4
		1-GASKET												71	11

(1) SMR CODE	(2) FEDERAL STOCK NUMBER	(3) DESCRIPTION REF NUMBER & MFR CODE / USABLE ON CODE	(4) UNIT OF MEAS	(5) QTY INC IN UNIT	(6) 30-DAY DS MAINT ALLOWANCE (a) 1-20	(b) 21-50	(c) 51-100	(7) 30-DAY GS MAINT ALLOWANCE (a) 1-20	(b) 21-50	(c) 51-100	(8) 1-YR ALW PER 100 EQUIP CNTGY	(9) DEPOT MAINT ALW PER 100 EQUIP	(10) ILLUSTRATION (a) FIG. NO.	(b) ITEM NO
		1-GASKET											72	3
		4-GASKET											72	20
		3-GASKET											72	71
		3-GASKET											72	24
		1-GASKET											72	56
		2-GASKET											72	58
		2-GASKET											75	32
		1-GASKET											75	41
		8-GASKET											75	44
		8-GASKET											75	46
		GROUP 02 - EXHAUST MANIFOLD												
C	PAFZZ	5305-269-3217 SCREW, CAP, HEXAGON HEAD: FLANGE MTG, 3/8-16 THD SIZE, 2 1/4 IN. LG MS90725-67 (96906)	EA	16	•	•	•	•	•	•	•	•	2	1
	PAFZZ	5310-637-9541 WASHER, LOCK: EXHAUST FLANGE TO ELBOW, 3/8 IN. SCREW SIZE MS35338-46 (96906)	EA	32	•	•	•	•	•	•	•	•	2	2
	PAFZZ	4730-499-3556 FLANGE, PIPE: EXHAUST 5164146 (72582)	EA	4	•	•	•	•	•	•	•	•	2	3
	PCFZZ	5330-297-6746 GASKET: EXHAUST OUTLET 5163811 (72582)	EA	8	•	•	•	•	•	•	•	•	2	4
	PAFZZ	5306-637-9623 BOLT, MACHINE: EXHAUST ELBOW TO MANIFOLD, 3/8-16 THD SIZE, 4 IN. LG 186285 (72582)	EA	16	•	•	•	•	•	•	•	•	2	5
	PAFZZ	4730-592-0429 ELBOW, EXHAUST 5171724 (72582)	EA	4	•	•	•	•	•	•	•	•	2	6
	PAFZZ	5305-269-3210 SCREW, CAP, HEXAGON HEAD: MANIFOLD DRAIN TUBE CLIP, 3/8-16 THD SIZE, 7/8 IN. LG MS90725-59 (96906)	EA	4	•	•	•	•	•	•	•	•	2	7
	PAOZZ	4730-499-3597 CLIP, TUBE 5171509 (72582)	EA	4	•	•	•	•	•	•	•	•	2	8
	PCOZZ	4720-189-9730 TUBE, RUBBER: 3/8 IN. DIA, 26 IN. LG 5166750 (72582)	EA	4	•	•	•	•	•	•	•	•	2	9
	PAOZZ	4820-845-1096 COCK, DRAIN: MANIFOLD MS35783-2 (96906)	EA	4	•	•	•	•	•	•	•	•	2	10
	PAOZZ	5310-012-3197 NUT, PLAIN, HEXAGON: PLATE AND CLIP MTG, 5/16-18 THD SIZE 123197 (72582)	EA	44	•	•	•	•	•	•	•	•	2	11
	PAOZZ	5310-407-9566 WASHER, LOCK: MANIFOLD DRAIN, TUBE CLIP AND PLATE, 5/16 IN. SCREW SIZE MS35338-45 (96906)	EA	44	•	•	•	•	•	•	•	•	2	12
C	PAOZZ	2815-981-1529 PLATE: EXHAUST, PLAIN 5119921 (72582)	EA	8	•	•	•	•	•	•	•	•	2	13
	PCOZZ	5330-298-5706 GASKET: EXHAUST MANIFOLD BY-PASS 5156319 (72582)	EA	2	•	•	•	•	•	•	•	•	2	14
	PAOZZ	5307-886-3438 STUD, PLAIN: PLATE MTG 5123282 (72582)	EA	40	•	•	•	•	•	•	•	•	2	15
	PAOZZ	4730-044-4867 PLUG, PIPE: MANIFOLD DRAIN 5182580 (72582)	EA	4	•	•	•	•	•	•	•	•	2	16
C	PAOZZ	2815-019-4682 PLATE: EXHAUST, TAPPED 5119926 (72582)	EA	4	•	•	•	•	•	•	•	•	2	17

(1)	(2)	(3)	(4)	(5)	(6)			(7)			(8)	(9)	(10)	
					30-DAY DS MAINT ALLOWANCE			30-DAY GS MAINT ALLOWANCE					ILLUSTRATION	
MAR CODE	FEDERAL STOCK NUMBER	DESCRIPTION REF NUMBER & MFR CODE USABLE ON CODE	UNIT OF MEAS	QTY INC IN UNIT	(a) 1-20	(b) 21-50	(c) 51-100	(a) 1-20	(b) 21-50	(c) 51-100	1-YR ALW PER 100 EQUIP CNTGY	DEPOT MAINT ALW PER 100 EQUIP	(a) FIG. NO.	(b) ITEM NO.
C	PAOZZ	2930-363-8226 PLATE, COVER: EXHAUST, PLAIN TAPPED 5119923 (72582)	EA	4	•	•	•	•	•	•	•	•	2	18
R	PAFZZ	5310-880-7745 NUT, PLAIN, HEXAGON: EXHAUST MANIFOLD, 7/16-20 THD SIZE MS51968-11 (96906)	EA	28	•	•	•	•	•	•	•	•	2	19
	PAFZZ	5310-595-8121 WASHER, LOCK: MANIFOLD MTG 5188273 (72582)	EA	20	•	•	•	•	•	•	•	•	2	20
C	PAFZZ	5310-209-1827 WASHER, FLAT: MANIFOLD MTG FFW92TYPEAGRADE1 (81348)	EA	28	•	•	•	•	•	•	•	•	2	21
	PAFZZ	2815-735-4283 BRACKET: CRAB EXHAUST MANIFOLD 5111369 (72582)	EA	8	•	•	•	•	•	•	•	•	2	22
	PAFZZ	2815-363-8228 MANIFOLD, EXHAUST 5188773 (72582)	EA	4	•	•	•	•	•	•	•	•	2	23
	PAFZZ	4730-604-7953 PLUG, PIPE: MANIFOLD, 1 IN. 5111798 (72582)	EA	1	•	•	•	•	•	•	•	•	2	24
R	KFFZZ	GASKET: EXHAUST MANIFOLD, END 5150195 (72582) (PART OF GASKET SET, FSN 5330-379-4301)	EA	8									2	25
C	KFFZZ	GASKET: EXHAUST MANIFOLD, INTERMEDIATE 5150196 (72582) (PART OF SET, FSN 5330-379-4301)	EA	4									2	26
	PAFZZ	4730-011-3175 PLUG, PIPE: 1/8 IN. 113175 (72582)	EA	4	•	•	•	•	•	•	•	•	2	
	PAOZZ	5310-141-3669 NUT, PLAIN, HEXAGON: EXHAUST MANIFOLD, BY-PASS TUBE, 5/16-18 THD SIZE 123197 (72582)	EA	4	•	•	•	•	•	•	•	•	2	
	PAOZZ	5310-407-9566 WASHER, LOCK: 5/16 IN. EXHAUST MANIFOLD BY-PASS TUBE, 5/16 IN. SCREW SIZE MS35338-45 (96906)	EA	4	•	•	•	•	•	•	•	•	2	
	PAOZZ	4730-908-3194 CLAMP, HOSE: EXHAUST MANIFOLD, BY-PASS HOSE MS35842-11 (96906)	EA	4	•	•	•	•	•	•	•	•	2	
	PCOZZ	4720-288-9770 HOSE, PREFORMED: EXHAUST MANIFOLD, BY-PASS 5177217 (72582)	EA	2	•	•	•	•	•	•	•	•	2	
		GROUP 03 - FILTER ASSEMBLY, OIL												
R	PAOZZ	2940-836-8263 FILTER ASSEMBLY, OIL: ENGINE 5196393 (72582)	EA	4	•	•	•	•	•	•	•	•	3	1
	PACZZ	5306-870-6222 BOLT, LUBE FILTER, CENTER 5120740 (72582)	EA	4	•	•	•	•	•	•	•	•	3	2
R	PACZZ	5365-579-5983 RING, RETAINER SNAP: FILTER SPRING 5120602 (72582)	EA	4	•	•	•	•	•	•	•	•	3	3
	PACZZ	5330-629-6340 RETAINER, LUBE: OIL FILTER SPRING 5187309 (72582)	EA	4	•	•	•	•	•	•	•	•	3	4
	PCCZZ	5330-604-8094 PACKING, PREFORMED: COVER NUT 5187310 (72582)	EA	4	•	•	•	•	•	•	•	•	3	5
C	PACZZ	5340-262-4701 SPACER, RING: SEAT 5154538 (72582)	EA	4	•	•	•	•	•	•	•	•	3	6
	PACZZ	5340-801-8731 SPRING, HELICAL, COMPRESSION: OIL FILTER 5187308 (72582)	EA	4	•	•	•	•	•	•	•	•	3	7
R	PCCZZ	5330-657-7636 GASKET: COVER STUD 5572799 (72582)	EA	4	•	•	•	•	•	•	•	•	3	8

	(1) SMR CODE	(2) FEDERAL STOCK NUMBER	(3) DESCRIPTION REF NUMBER & MFR CODE	USABLE ON CODE	(4) UNIT OF MEAS	(5) QTY INC IN UNIT	(6) 30-DAY DS MAINT ALLOWANCE (a) 1-20	(b) 21-50	(c) 51-100	(7) 30-DAY GS MAINT ALLOWANCE (a) 1-20	(b) 21-50	(c) 51-100	(8) 1-YR ALW PER 100 EQUIP CNTGY	(9) DEPOT MAINT ALW PER 100 EQUIP	(10) ILLUSTRATION (a) FIG. NO.	(b) ITEM NO.
	XDOZZ		SHELL OIL FILTER: INCLUDES PLUG 5574008 (72582)		EA	4									3	9
R	PAOZZ	4820-360-8299	PLUG, PIPE: OIL FILTER SHELL 5570480 (72582)		EA	4	•	•	•	•	•	•	•	•	3	10
C	PACZZ	2940-580-6238	ELEMENT, FILTER: OIL FILTER PF132 (70040)		EA	4	•	•	•	•	•	•	•	•	3	11
	PCCZZ	5330-290-7860	WASHER, NONMETALLIC: OIL SHELL 5571024 (72582)		EA	4	•	•	•	•	•	•	•	•	3	12
	XAOZZ		ADAPTER, COVER, OIL FILTER 5123382 (72582)		EA	4									3	13
	PAOZZ	4730-886-5967	PLUG, MACHINE: OIL FILTER BY-PASS VALVE 5126686 (72582)		EA	4	•	•	•	•	•	•	•	•	3	14
	PAOZZ	5330-736-3508	WASHER, NONMETALLIC: BY-PASS PLUG 5575086 (72582)		EA	4	•	•	•	•	•	•	•	•	3	15
	XAOZZ		SPRING, HELICAL: BY-PASS VALVE 5133594 (72582)		EA	4									3	16
	PAOZZ	2940-944-6249	VALVE: OIL FILTER BY-PASS 5133431 (72582)		EA	4	•	•	•	•	•	•	•	•	3	17
	PAOZZ	4730-187-4207	PLUG, PIPE: 1/4 IN. 5145010 (72582)		EA	4	•	•	•	•	•	•	•	•	3	18
R	PAOZZ	5305-225-8510	SCREW, CAP, HEXAGON HEAD: BRACKET MTG MS90725-46 (96906)		EA	12	•	•	•	•	•	•	•	•	3	19
R	PAOZZ	5310-407-9566	WASHER, LOCK: BRACKET MTG, 5/16 IN. SCREW SIZE MS35338-45 (96906)		EA	12	•	•	•	•	•	•	•	•	3	20
	XDOZZ		BRACKET, OIL FILTER MOUNTING 5112134 (72582)		EA	4									3	21
	XDOZZ		SPACER, OIL FILTER MOUNTING 5111462 (72582)		EA	12									3	22
	PAOZZ	5305-269-3210	SCREW, CAP, HEXAGON HEAD: OIL FILTER MTG, 3/8-16 THD SIZE, 7/8 IN. LG MS90725-59 (96906)		EA	16	•	•	•	•	•	•	•	•	3	23
	PAOZZ	5310-637-9541	WASHER, LOCK: OIL FILTER MTG, 3/8 IN. SCREW SIZE MS35338-46 (96906)		EA	16	•	•	•	•	•	•	•	•	3	24
	PCOZZ	4720-788-5956	HOSE ASSEMBLY, OIL FILTER INLET 5182894 (72582)	AB	EA	2	•	•	•	•	•	•	•	•	3	
	PAOZZ	4730-273-6041	ADAPTER, STRAIGHT: OIL FILTER INLET AND OUTLET HOSE 5177664 (72582)	AB	EA	2	•	•	•	•	•	•	•	•	3	
	PCOZZ	2815-421-1473	HOSE, OIL FILTER OUTLET 5112421 (72582)	AB	EA	2	•	•	•	•	•	•	•	•	3	
N	PCOZZ	4720-494-1741	HOSE ASSEMBLY, OIL FILTER INLET 5144542 (72582)	C	EA	2	•	•	•	•	•	•	•	•	3	
N	PCOZZ	4720-494-1744	HOSE, OIL FILTER OUTLET 5144188 (72582)	C	EA	2	•	•	•	•	•	•	•	•	3	
N	PAOZZ	4730-334-7839	CONNECTOR, OIL FILTER HOSE 9402711 (72582)	C	EA	4	•	•	•	•	•	•	•	•	3	
			GROUP 04 - OIL FILLER, DIP STICK AND BREATHER													
	PAOZZ	2815-288-3642	CAP, OIL FILLER TUBE 5156498 (72582)		EA	4	•	•	•	•	•	•	•	•	4	1
R	PAOZZ	5330-530-2527	GASKET: OIL FILLER CAP 1543857 (72582)		EA	4	•	•	•	•	•	•	•	•	4	2

(1)	(2)	(3)	(4)	(5)	(6)			(7)			(8)	(9)	(10)	
					30-DAY DS MAINT ALLOWANCE			30-DAY GS MAINT ALLOWANCE					ILLUSTRATION	
SMR CODE	FEDERAL STOCK NUMBER	DESCRIPTION REF NUMBER & MFR CODE USABLE ON CODE	UNIT OF MEAS	QTY INC IN UNIT	(a) 1-20	(b) 21-50	(c) 51-100	(a) 1-20	(b) 21-50	(c) 51-100	1-YR ALW PER 100 EQUIP CNTGY	DEPOT MAINT ALW PER 100 EQUIP	(a) FIG. NO.	(b) ITEM NO.
C PAOZZ	4010-812-0529	CHAIN, CAP 5167502 (72582)	EA	4	•	•	•	•	•	•	•	•	4	3
PAOZZ	2910-988-8440	TUBE: OIL FILLER 5167485 (72582)	EA	4	•	•	•	•	•	•	•	•	4	4
PAOZZ	4730-595-0792	STRAINER, ELEMENT: OIL FILLER TUBE 5150147 (72582)	EA	4	•	•	•	•	•	•	•	•	4	5
C PAOZZ		GAGE, OIL LEVEL 5109292 (72582)	EA	4	•	•	•	•	•	•	•	•	4	6
C PAOZZ	5305-269-3223	SCREW, CAP, HEXAGON HEAD: DIP STICK ADAPTER CLIP, 3/8-16 THD SIZE, 3 3/4 IN. LG MS90725-73 (96906)	EA	4	•	•	•	•	•	•	•	•	4	7
PAOZZ	5310-637-9541	WASHER, LOCK: DIP STICK ADAPTER CLIP, 3/8 IN. SCREW SIZE MS35338-46 (96906)	EA	4	•	•	•	•	•	•	•	•	4	8
C XDOZZ		CLIP, DIP STICK 5126478 (72582)	EA	4									4	9
C PAOZZ	2815-922-2027	SPACER, OIL LEVEL GAGE CLIP: 13-32 THD SIZE, 3/4 X 1 13/16 IN. LG 5173144 (72582)	EA	4	•	•	•	•	•	•	•	•	4	10
C PAOZZ	2815-947-4290	ADAPTER, GUIDE DIP STICK 5151430 (72582)	EA	4	•	•	•	•	•	•	•	•	4	11
C PAOZZ		ADAPTER: DIP STICK 5109777 (72582)	EA	4	•	•	•	•	•	•	•	•	4	12
C PAOZZ	5305-225-8501	SCREW, CAP, HEXAGON HEAD: BREATHER TUBE CLIP, 5/16-18 THD SIZE, 1 3/8 IN. LG MS90725-37 (96906)	EA	4	•	•	•	•	•	•	•	•	4	13
PAOZZ	5310-407-9566	WASHER, LOCK: BREATHER TUBE CLIP, 5/16 IN. SCREW SIZE MS35338-45 (96906)	EA	4	•	•	•	•	•	•	•	•	4	14
PAOZZ	5310-081-4219	WASHER, FLAT: BREATHER TUBE CLIP, 5/16 IN. SCREW SIZE 120393 (72582)	EA	8	•	•	•	•	•	•	•	•	4	15
C PAOZZ	5340-719-7774	CLIP: BREATHER TUBE 5128751 (72582)	EA	4	•	•	•	•	•	•	•	•	4	16
C PAOZZ		SPACER: BREATHER TUBE, 1/4 PIPE, 7/8 IN. LG 5182645 (72582)	EA	4	•	•	•	•	•	•	•	•	4	17
PAOZZ	5305-614-0274	SCREW, CAP, FILLISTER HEAD: BREATHER TUBE MTG, NO. 10-24 THD SIZE, 1/2 IN. LG MS35265-63 (96906)	EA	8	•	•	•	•	•	•	•	•	4	18
C PAOZZ	4710-689-3506	TUBE ASSEMBLY, BREATHER: GOVERNOR 5128798 (72582)	EA	4	•	•	•	•	•	•	•	•	4	19
R KFOZZ		GASKET: BREATHER TUBE 5150900 (72582) (PART OF GASKET SET, FSN 5330-379-4301)	EA	4									4	20
		GROUP 05 - OIL COOLER, ENGINE												
PAOZZ	4730-908-6292	CLAMP, HOSE: OIL COOLER MS35842-14 (96906)	EA	8	•	•	•	•	•	•	•	•	5	1
MOOZZ		HOSE: OIL COOLER WATER OUTLET ZZ4428 (81348) MANUFACTURE FROM:	EA	8									5	2
PCOZZ	4720-277-5026	HOSE, 2 1/4 IN. ID X 4 1/4 IN., REQUIRED FOR EACH HOSE	FT		•	•	•	•	•	•			5	
PAOZZ	2930-015-3071	TUBE, WATER INLET: OIL COOLER WATER INLET CONNECTION 5186429 (72582)	EA	2	•	•	•	•	•	•	•	•	5	3

	(1) SMR CODE	(2) FEDERAL STOCK NUMBER	(3) DESCRIPTION REF NUMBER & MFR CODE	USABLE ON CODE	(4) UNIT OF MEAS	(5) QTY INC IN UNIT	(6) 30-DAY DS MAINT ALLOWANCE (a) 1-20	(b) 21-50	(c) 51-100	(7) 30-DAY GS MAINT ALLOWANCE (a) 1-20	(b) 21-50	(c) 51-100	(8) 1-YR ALW PER 100 EQUIP CNTGY	(9) DEPOT MAINT ALW PER 100 EQUIP	(10) ILLUSTRATION (a) FIG. NO.	(b) ITEM NO.
C	PAOZZ	5305-269-3211	SCREW, CAP, HEXAGON HEAD: ELBOW MTG, 3/8-16 THD SIZE, 1 IN. LG MS90725-60 (96906)		EA	4	•	•	•	•	•	•	•	•	5	4
	PAOZZ	5310-637-9541	WASHER, LOCK: ELBOW MTG, 3/8 IN. SCREW SIZE MS35338-46 (96906)		EA	4	•	•	•	•	•	•	•	•	5	5
C	PAOZZ	2815-902-1882	ELBOW: OIL COOLER WATER INLET CONNECTION 5186316 (72582)		EA	4	•	•	•	•	•	•	•	•	5	6
	KFOZZ		GASKET: OIL COOLER WATER INLET 5167762 (72582) (PART OF KIT, FSN 2930-379-4295)		EA	2									5	7
	PAOZZ	4730-908-6292	CLAMP: COOLER TO WATER PUMP HOSE MS35842-14 (96906)		EA	4	•	•	•	•	•	•	•	•	5	8
	KFOZZ		PACKING, PREFORMED: FRESH WATER PUMP 5156770 (72582) (PART OF GASKET SET, FSN 5330-379-4301)		EA	8									5	9
R	PAOZZ	5305-269-3216	SCREW, CAP, HEXAGON HEAD: COOLER MTG MS35295-66 (96906)		EA	8	•	•	•	•	•	•	•	•	5	10
	PAOZZ	5310-637-9541	WASHER, LOCK: COOLER MTG, 3/8 IN. SCREW SIZE MS35338-46 (96906)		EA	4	•	•	•	•	•	•	•	•	5	11
R	PCOZZ	5330-842-1900	GASKET: OIL COOLER WATER INLET 5163760 (72582)		EA	2	•	•	•	•	•	•	•	•	5	12
	PAOZZ	4730-785-3863	ELBOW, TUBE: OIL COOLER OUTLET 5186460 (72582)		EA	2	•	•	•	•	•	•	•	•	5	13
	PAOZZ	4820-849-1220	COCK, DRAIN: 1/4 IN. OIL COOLER MS35782-5 (96906)		EA	4	•	•	•	•	•	•	•	•	5	14
C	PAOZZ	5306-226-4844	BOLT, MACHINE, OIL COOLER HOUSING: 5/16-18 THD SIZE, 4 3/4 IN. LG MS90728-51 (96906)		EA	64	•	•	•	•	•	•	•	•	5	15
C	PAOZZ	5310-407-9566	WASHER, LOCK, OIL COOLER HOUSING: 5/16 IN. SCREW SIZE MS35338-45 (96906)		EA	64	•	•	•	•	•	•	•	•	5	16
C	XDOZZ		HOUSING, OIL COOLER, D ENGINE 5186459 (72582)		EA	2									5	17
C	XDOZZ		HOUSING, OIL COOLER, B ENGINE 5186318 (72582)		EA	2									5	17
	KFOZZ		GASKET: OIL COOLER CORE TO HOUSING 5150155 (72582) (PART OF GASKET SET, FSN 5330-379-4301)		EA	12									5	18
	PAOZZ	2930-377-2472	CORE ASSEMBLY: 12 PLATE 8502833 (72582)		EA	8	•	•	•	•	•	•	•	•	5	19
R	KFOZZ		GASKET: OIL COOLER, OUTER 5154215 (72582) (PART OF GASKET SET, FSN 5330-379-4301)		EA	12									5	20
R	PAOZZ	5305-269-3217	SCREW, CAP, HEXAGON HEAD: ADAPTER MTG, 3/8-16 THD SIZE, 2 1/4 IN. LG MS35295-67 (96906)		EA	4	•	•	•	•	•	•	•	•	5	21
	PAOZZ	5310-637-9541	WASHER, LOCK: ADAPTER MTG, 3/8 IN. SCREW SIZE MS35338-46 (96906)		EA	16	•	•	•	•	•	•	•	•	5	22
	PAOZZ	5310-193-9753	WASHER, FLAT: ADAPTER MTG, 3/8 IN. SCREW SIZE 5226029 (72582)		EA	2	•	•	•	•	•	•	•	•	5	23
C	XDOZZ		ADAPTER, OIL COOLER, B ENGINE 5112991 (72582)		EA	1									5	24
C	XDOZZ		ADAPTER, OIL COOLER, D ENGINE 5111901 (72582)		EA	1									5	24

(1)	(2)	(3)	(4)	(5)	(6)			(7)			(8)	(9)	(10)	
					30-DAY DS MAINT ALLOWANCE			30-DAY GS MAINT ALLOWANCE					ILLUSTRATION	
SMR CODE	FEDERAL STOCK NUMBER	DESCRIPTION REF NUMBER & MFR CODE / USABLE ON CODE	UNIT OF MEAS	QTY INC IN UNIT	(a) 1-20	(b) 21-50	(c) 51-100	(a) 1-20	(b) 21-50	(c) 51-100	1-YR ALW PER 100 EQUIP CNTGY	DEPOT MAINT ALW PER 100 EQUIP	(a) FIG. NO.	(b) ITEM NO.
KFOZZ		GASKET: OIL COOLER ADAPTER TO BLOCK 5150154 (72582) (PART OF GASKET SET, FSN 5330-379-4301)	EA	4									5	25
C KFOZZ		WASHER, FLAT: OIL COOLER ADAPTER 5152904 (72582) (PART OF GASKET SET, FSN 5330-379-4301)	EA	4									5	26
R PAOZZ	5365-289-1578	PLUG, MACHINE, THREAD: OIL COOLER VALVE 5177772 (72582)	EA	2	•	•	•	•	•	•	•	•	5	27
C KFOZZ		WASHER, FLAT: OIL COOLER PLUG 5202897 (72582) (PART OF GASKET SET, FSN 5330-379-4301)	EA	2									5	28
PAOZZ	2815-527-2312	SPRING, HELICAL COMPRESSION: OIL COOLER BY-PASS VALVE 5177778 (72582)	EA	2	•	•	•	•	•	•	•	•	5	29
PAOZZ	2930-565-5758	VALVE, OIL COOLER BY-PASS 5177777 (72582)	EA	2	•	•	•	•	•	•	•	•	5	30
XDOZZ		ELBOW: OIL COOLER TUBE 5123043 (72582)	EA	2									5	
XDOZZ		ELBOW, PIPE TO TUBE: OIL COOLER WATER OUTLET 5175683 (72582)	EA	2									5	
PAOZZ	4730-187-4241	PLUG, PIPE: OIL COOLER WATER OUTLET 9409961 (72582)	EA	2	•	•	•	•	•	•	•	•	5	
PAOZZ	5305-068-0511	SCREW, CAP, HEXAGON HEAD: OIL COOLER WATER OUTLET ELBOW, 3/8-16 THD SIZE, 1 1/4 IN. LG MS90728-62 (96906)	EA	4	•	•	•	•	•	•	•	•	5	
PAOZZ	5310-732-0559	NUT, PLAIN, HEXAGON: OIL COOLER WATER OUTLET ELBOW, 3/8-24 THD SIZE MS51968-8 (96906)	EA	8	•	•	•	•	•	•	•	•	5	
PCOZZ	5330-097-3248	GASKET: OIL COOLER WATER OUTLET 5186428 (72582)	EA	2	•	•	•	•	•	•	•	•	5	
FCOZZ	2930-379-4295	GASKET KIT, HEAT EXCHANGER 5192637 (72582) (CONSISTS OF)	EA	2	•	•	•	•	•	•	•	•	5	
		1-GASKET											5	7
		2-GASKET											5	18
		2-GASKET											5	20
		1-GASKET											5	28
		2-GASKET												
		1-GASKET												
		2-SEAL												
		1-GLAND												
R PAOZZ	4730-277-5683	ELBOW: OIL COOLER HOUSING COVER, 45 DEG 444052 (72582)	EA	1	•	•	•	•	•	•	•	•		
PAFZZ	5307-371-5345	STUD, PLAIN: OIL COOLER 5176182 (72582)	EA	16	•	•	•	•	•	•	•	•		
PAFZZ	5305-543-2419	SCREW, CAP, HEXAGON HEAD: OIL COOLER ADAPTER, 3/8-16 THD SIZE, 1 1/8 IN. LG MS90728-61 (96906)	EA	4	•	•	•	•	•	•	•	•		
PAFZZ	5305-725-2317	SCREW, CAP, HEXAGON HEAD: OIL COOLER ADAPTER, 3/8-16 THD SIZE, 1 1/2 IN. LG MS90728-64 (96906)	EA	4	•	•	•	•	•	•	•	•		

	(1) SMR CODE	(2) FEDERAL STOCK NUMBER	(3) DESCRIPTION REF NUMBER & MFR CODE	USABLE ON CODE	(4) UNIT OF MEAS	(5) QTY INC IN UNIT	(6) 30-DAY DS MAINT ALLOWANCE (a) 1-20	(b) 21-30	(c) 31-100	(7) 30-DAY GS MAINT ALLOWANCE (a) 1-20	(b) 21-30	(c) 31-100	(8) 1-YR ALW PER 100 EQUIP CNTGY	(9) DEPOT MAINT ALW PER 100 EQUIP	(10) ILLUSTRATION (a) FIG. NO.	(b) ITEM NO.
	PAFZZ	5305-354-1227	SCREW, CAP, HEXAGON: OIL COOLER ADAPTER, 3/8-16 THD SIZE, 1 3/4 IN. LG 5157244 (72582)		EA	2	•	•	•	•	•	•	•	•		
	PAFZZ	5306-269-2802	BOLT, MACHINE: ADAPTER MTG MS90726-59 (96906)		EA	2	•	•	•	•	•	•	•	•		
	PAFZZ	5310-732-0559	NUT, PLAIN, HEXAGON: OIL COOLER ADAPTER, 3/8-24 THD SIZE MS51968-8 (96906)		EA	2	•	•	•	•	•	•	•	•		
	PAOZZ	4730-193-7080	ELBOW, STREET: OIL COOLER ADAPTER, 3/4 IN., 45 DEG 119099 (72582)		EA	2	•	•	•	•	•	•	•	•		
	PAOZZ	4730-246-9188	ELBOW, PIPE: OIL COOLER ADAPTER, 3/4 IN., 90 DEG 119095 (72582)		EA	2	•	•	•	•	•	•	•	•		
	PAOZZ	4730-188-1893	NIPPLE: OIL COOLER ADAPTER, 3/4 X 2 IN. LG 190717 (72582)		EA	2	•	•	•	•	•	•	•	•		
	PAOZZ		NIPPLE: OIL COOLER ADAPTER, 3/4 X 2 1/2 IN. LG 190723 (72582)		EA	2	•	•	•	•	•	•	•	•		
	PAHZZ	2815-421-1471	TUBE, OIL RETAINER, BALANCE SHAFT 5122299 (72582)		EA	1				•	•	•	•	•		
	PAHZZ		BOLT, OIL RETAINER TUBE 5185564 (72582)		EA	1				•	•	•	•	•		
	PAHZZ	2815-363-8141	TUBE ASSEMBLY, BLOWER DRIVE BEARING 5150433 (72582)		EA	2				•	•	•	•	•		
	PAFZZ	4730-709-2788	TEE, PIPE TO TUBE: BLOWER DRIVE, 1/4 IN. 5167220 (72582)		EA	2	•	•	•	•	•	•	•	•		
	PAFZZ	4730-277-8273	ELBOW, PIPE TO TUBE: BLOWER DRIVE 137421 (72582)		EA	2	•	•	•	•	•	•	•	•		
	PAOZZ	4730-011-2578	PLUG, PIPE: HEAT EXCHANGER, WATER INLET TUBE, 1/4 IN. LG 112578 (72582)		EA	2	•	•	•	•	•	•	•	•		
			GROUP 06 - FUEL FILTER ASSEMBLY													
	PA000	4330-534-2401	FILTER ASSEMBLY, FUEL SECONDARY 5186380 (72582)		EA	4	•	•	•	•	•	•	•	•	6	
	PAOZZ	4820-849-1220	COCK, DRAIN, FUEL FILTER: 1/4 IN. MS35782-5 (96906)		EA	8	•	•	•	•	•	•	•	•	6	1
R	PACZZ	5305-988-1721	SCREW, MACHINE: VENT 131375 (72582)		EA	8	•	•	•	•	•	•	•	•	6	2
	PCCZZ	5330-491-1498	GASKET: FUEL FILTER VENT SCREW 5193710 (72582)		EA	8	•	•	•	•	•	•	•	•	6	3
	PACZZ	5310-588-8490	NUT, FILTER COVER 5193694 (72582)		EA	8	•	•	•	•	•	•	•	•	6	4
	PCCZZ	5330-285-3825	GASKET: FUEL FILTER COVER NUT 2243465 (72582)		EA	8	•	•	•	•	•	•	•	•	6	5
	XAFZZ		SHELL ASSEMBLY 5193852 (72582)		EA	8									6	6
	PCCZZ	5330-627-4085	GASKET: FUEL FILTER SHELL 5192801 (72582)		EA	8	•	•	•	•	•	•	•	•	6	7
C	PACZZ	2910-287-1912	ELEMENT, FUEL FILTER MILF20627 (81349)		EA	8	•	•	•	•	•	•	•	•	6	8
	XDCZZ		GUIDE, ELEMENT 22126 (13800)		EA	8									6	9

(1) SMR CODE	(2) FEDERAL STOCK NUMBER	(3) DESCRIPTION REF NUMBER & MFR CODE	USABLE ON CODE	(4) UNIT OF MEAS	(5) QTY INC IN UNIT	(6) 30-DAY DS MAINT ALLOWANCE (a) 1-20	(b) 21-50	(c) 51-100	(7) 30-DAY GS MAINT ALLOWANCE (a) 1-20	(b) 21-50	(c) 51-100	(8) 1-YR ALW PER 100 EQUIP CNTGY	(9) DEPOT MAINT ALW PER 100 EQUIP	(10) ILLUSTRATION (a) FIG. NO.	(b) ITEM NO.
XAOZZ		SEAT, ELEMENT 5186380-1 (72582)		EA	8									6	10
PCCZZ		GASKET: ELEMENT TO CASE 492619 (72582)		EA	8	•	•	•	•	•	•	•	•	6	11
PACZZ	5330-285-3825	WASHER, FLAT: ELEMENT TO CASE		EA	8	•	•	•	•	•	•	•	•	6	12
XDCZZ		SPRING, ELEMENT 5186380-2 (72582)		EA	8									6	13
PACZZ	5305-225-3843	SCREW, CAP, HEXAGON: HANDLE MTG, 1/4-20 THD SIZE, 1 IN. LG MS90728-8 (96906)		EA	4	•	•	•	•	•	•	•	•	6	14
PAOZZ	5310-929-6395	WASHER, LOCK: HANDLE MTG, 1/4 IN. SCREW SIZE MS35338-136 (96906)		EA	4	•	•	•	•	•	•	•	•	6	15
C PAOZZ	5330-837-4010	WASHER, NONMETALLIC: HANDLE MTG, 1/4 IN. SCREW SIZE		EA	4	•	•	•	•	•	•	•	•	6	16
C XDOZZ		HANDLE, FILTER COVER 5193708 (72582)		EA	4									6	17
XDOZZ		NUT, PLAIN, HEXAGON: FUEL FILTER VALVE 5193709 (72582)		EA	4									6	18
XAOZZ		VALVE, FLOW CONTROL 5186380-3 (72582)		EA	4									6	19
PCOZZ	5330-420-9635	PACKING, PREFORMED: RING SEAL 5194048 (72582)		EA	8	•	•	•	•	•	•	•	•	6	20
PCOZZ	2910-590-1709	PACKING, PREFORMED: FUEL FILTER VALVE 5193695 (72582)		EA	8	•	•	•	•	•	•	•	•	6	21
PAOZZ	4730-278-2962	PLUG, PIPE, COVER: 3/8 IN. AN932UA (88044)		EA	4	•	•	•	•	•	•	•	•	6	22
XAOZZ		COVER, FILTER 05166 (13800)		EA	1									6	23
PAOZZ	5310-732-0559	NUT, PLAIN, HEXAGON: FUEL FILTER MTG, 3/8-24 THD SIZE MS51968-8 (96906)		EA	16	•	•	•	•	•	•	•	•	6	24
PACZZ	5310-637-9541	WASHER, LOCK: FUEL FILTER MTG, 3/8 IN. SCREW SIZE MS35338-46 (96906)		EA	16	•	•	•	•	•	•	•	•	6	25
PAOZZ	5305-269-2805	SCREW, CAP, HEXAGON HEAD: FUEL FILTER MTG, 3/8-24 THD SIZE, 1 1/2 IN. LG MS90726-62 (96906)		EA	16	•	•	•	•	•	•	•	•	6	26
		GROUP 07 - FUEL STRAINER ASSEMBLY													
PAOOO	2910-421-1539	STRAINER ASSEMBLY, FUEL PRIMARY 5113928 (72582)		EA	2	•	•	•	•	•	•	•	•	7	
XDOZZ		HANDLE, KNIFE CONTROL 5196639 (72582)		EA	2									7	1
R PAOZZ	5310-660-2649	NUT, JAM: HANDLE MS35690-424 (96906)		EA	4	•	•	•	•	•	•	•	•	7	2
XDOZZ		NUT, PACKING 17771 (81321)		EA	4									7	3
XDOZZ		GLAND, PACKING 11069 (81321)		EA	4									7	4
R PCOZZ	5330-285-7384	PACKING 17433 (81321)		EA	4	•	•	•	•	•	•	•	•	7	5
XDOZZ		ADAPTER, PACKING GLAND 17783 (81321)		EA	4									7	6

(1) SMR CODE	(2) FEDERAL STOCK NUMBER	(3) DESCRIPTION REF NUMBER & MFR CODE / USABLE ON CODE	(4) UNIT OF MEAS	(5) QTY INC IN UNIT	(6) 30-DAY DS MAINT ALLOWANCE (a) 1-20	(b) 21-50	(c) 51-100	(7) 30-DAY GS MAINT ALLOWANCE (a) 1-20	(b) 21-50	(c) 51-100	(8) 1-YR ALW PER 100 EQUIP CNTGY	(9) DEPOT MAINT ALW PER 100 EQUIP	(10) ILLUSTRATION (a) FIG. NO.	(b) ITEM NO.
PAOZZ	2910-424-7431	VALVE, VENT 15002 (81321)	EA	1	•	•	•	•	•	•	•	•	7	7
PACZZ	4730-187-4191	PLUG, PIPE: 1/2 IN. 103868 (72582)	EA	2	•	•	•	•	•	•	•	•	7	8
PACZZ		PLUG, PIPE: COVER 21296 (81321)	EA	4	•	•	•	•	•	•	•	•	7	9
PACZZ		PLUG, DRAIN 5196640 (72582)	EA	4	•	•	•	•	•	•	•	•	7	10
PCCZZ	5330-364-2674	GASKET: PLUG 694203 (72582)	EA	4	•	•	•	•	•	•	•	•	7	11
PACZZ	2910-421-1540	RING, CLAMPING 5193698 (72582)	EA	4	•	•	•	•	•	•	•	•	7	12
XAOZZ		SHELL 5193697 (72582)	EA	4									7	13
PCCZZ	5330-599-4823	WASHER, NONMETALLIC: COVER 5193704 (72582)	EA	4	•	•	•	•	•	•	•	•	7	14
PACZZ	2910-420-8919	ELEMENT AND KNIFE ASSEMBLY 5196634 (72582)	EA	4	•	•	•	•	•	•	•	•	7	15
XDCZZ		HANDLE, FLOW CONTROL 5193707 (72582)	EA	2									7	16
R PAOZZ	5310-853-9335	NUT, PLAIN, HEXAGON: FLOW CONTROL VALVE MS35691-525 (96906)	EA	4	•	•	•	•	•	•	•	•	7	17
XBOZZ		RETAINER, PACKING REGULATOR VALVE 5153705 (72582)	EA	2									7	18
PCOZZ	5330-323-9156	PACKING, PREFORMED: REGULATOR VALVE 3230393 (72582)	EA	2	•	•	•	•	•	•	•	•	7	19
PAOZZ	4330-786-1741	VALVE, REGULATOR 5193702 (72582)	EA	2	•	•	•	•	•	•	•	•	7	20
XAOZZ		COVER 5196638 (72582)	EA	2									7	21
PAOZZ	5305-071-1767	SCREW, CAP, HEXAGON HEAD: BRACKET MTG, 1/2-13 THD SIZE, 1 1/8 IN. LG MS90725-110 (96906)	EA	8	•	•	•	•	•	•	•	•	7	22
PAOZZ	5310-584-5272	WASHER, LOCK: BRACKET MTG, 1/2 IN. SCREW SIZE MS35338-48 (96906)	EA	16	•	•	•	•	•	•	•	•	7	23
XDOZZ		BRACKET, FUEL STRAINER MOUNTING 5186396 (72582)	EA	2									7	24
PAOZZ	5310-637-9541	WASHER, LOCK: STRAINER TO BRACKET, 3/8 IN. SCREW SIZE MS35338-46 (96906)	EA	8	•	•	•	•	•	•	•	•	7	
PAOZZ	5305-269-2804	SCREW, CAP, HEXAGON HEAD: STRAINER TO BRACKET, 3/8-24 THD SIZE, 1 1/8 IN. LG 181365 (72582)	EA	4	•	•	•	•	•	•	•	•	7	
PACZZ	5310-732-0559	NUT, PLAIN, HEXAGON: STRAINER TO BRACKET, 3/8-24 THD SIZE MS51968-8 (96906)	EA	4	•	•	•	•	•	•	•	•	7	
PAOZZ	5305-269-3211	SCREW, CAP, HEXAGON HEAD: 3/8-16 THD SIZE, 1 IN. LG MS90725-60 (96906)	EA	4	•	•	•	•	•	•	•	•	7	
		GROUP 08 - FUEL STRAINER, LINE												
PAOOO	2910-235-4313	STRAINER, FUEL: TYPE D-15J A 18143 (81321)	EA	2	•	•	•	•	•	•	•	•	8	

	(1) SMR CODE	(2) FEDERAL STOCK NUMBER	(3) DESCRIPTION REF NUMBER & MFR CODE	USABLE ON CODE	(4) UNIT OF MEAS	(5) QTY INC IN UNIT	(6) 30-DAY DS MAINT ALLOWANCE (a) 1-20	(b) 21-50	(c) 51-100	(7) 30-DAY GS MAINT ALLOWANCE (a) 1-20	(b) 21-50	(c) 51-100	(8) 1-YR ALW PER 100 EQUIP CNTGY	(9) DEPOT MAINT ALW PER 100 EQUIP	(10) ILLUSTRATION (a) FIG. NO.	(b) ITEM NO.
R	XDOZZ		HANDLE ASSEMBLY 14113-1 (81321)	A	EA	1									8	1
C	PAOZZ	5310-660-2649	NUT, JAM: 1/4-28 THD SIZE MS35690-424 (96906)	A	EA	1	•	•	•	•	•	•	•	•	8	2
	PAOZZ	4730-028-3890	NUT, STUFFING BOX 17771 (81321)	A	EA	1	•	•	•	•	•	•	•	•	8	3
R	XDOZZ		GLAND, PACKING, STUFFING BOX 11069 (81321)	A	EA	1									8	4
	PCOZZ	5330-285-7384	PACKING, STUFFING BOX 17433 (81321)	A	EA	1	•	•	•	•	•	•	•	•	8	5
C	XDOZZ		ADAPTER 17783 (81321)	A	EA	1									8	6
	PAOZZ	2910-424-7431	VALVE, VENT 15002 (81321)	A	EA	2	•	•	•	•	•	•	•	•	8	7
	PCOZZ	5330-141-7675	GASKET: VENT CHAMBER 20989 (81321)	A	EA	1	•	•	•	•	•	•	•	•	8	8
R	PACZZ	5365-202-8946	PLUG, FILLER 7335 (81321)	A	EA	1	•	•	•	•	•	•	•	•	8	9
	PCCZZ	5330-599-5433	GASKET: FILLER PLUG 7494 (81321)	A	EA	1	•	•	•	•	•	•	•	•	8	10
	PACZZ	4330-415-1622	PLUG ASSEMBLY, DRAIN 13566 (81321)	A	EA	1	•	•	•	•	•	•	•	•	8	11
R	PCCZZ	5330-522-5340	GASKET: DRAIN PLUG 11217 (81321)	A	EA	1	•	•	•	•	•	•	•	•	8	12
	PACZZ	4330-706-9544	RING ASSEMBLY, CLAMPING 14797 (81321)	A	EA	1	•	•	•	•	•	•	•	•	8	13
	XAOZZ		CASE ASSEMBLY 14614 (81321)	A	EA	1									8	14
R	PCCZZ	5330-328-9857	GASKET: CASE 13291 (81321)	A	EA	1	•	•	•	•	•	•	•	•	8	15
	PACZZ	2940-328-8458	ELEMENT AND KNIFE ASSEMBLY 16622 (81321)	A	EA	1	•	•	•	•	•	•	•	•	8	16
	XAOZZ		HEAD 18142 (81321)	A	EA	1									8	17
N	PAOOO		FILTER PRIMARY: MODEL G190J-39-3 63108-3 (81321)	C	EA	2	•	•	•	•	•	•	•	•	9	
N	PACZZ		PLUG, PIPE 8901 (81321)	C	EA	1	•	•	•	•	•	•	•	•	9	1
N	XDOZZ		HANDLE ASSEMBLY 14113-1 (81321)	C	EA	1									9	2
N	PAOZZ	5310-660-2649	NUT, JAM: 1/4-28 UNF MS35690-424 (96906)	C	EA	1	•	•	•	•	•	•	•	•	9	3
N	PAOZZ	4730-028-3890	NUT, STUFFING BOX 17771 (81321)	C	EA	1	•	•	•	•	•	•	•	•	9	4
N	PACZZ	5330-361-9569	GLAND, STUFFING BOX 11069 (81321)	C	EA	1	•	•	•	•	•	•	•	•	9	5
N	PCOZZ	5330-285-7384	PACKING, STUFFING BOX 17433 (81321)	C	EA	1	•	•	•	•	•	•	•	•	9	6
N	XDOZZ		STUFFING BOX AND SPRING ASSEMBLY 17783 (81321)	C	EA	1									9	7
N	XAOZZ		CASE ASSEMBLY 6668337 (81321)	C	EA	1									9	8
N	PACZZ	2940-499-1689	ELEMENT KNIFE: .003 SPACING 63103-3 (81321)	C	EA	1	•	•	•	•	•	•	•	•	9	9

(1) SMR CODE	(2) FEDERAL STOCK NUMBER	(3) DESCRIPTION REF NUMBER & MFR CODE	USABLE ON CODE	(4) UNIT OF MEAS	(5) QTY INC IN UNIT	(6) 30-DAY DS MAINT ALLOWANCE (a) 1-20	(b) 21-50	(c) 51-100	(7) 30-DAY GS MAINT ALLOWANCE (a) 1-20	(b) 21-50	(c) 51-100	(8) 1-YR ALW PER 100 EQUIP CNTGY	(9) DEPOT MAINT ALW PER 100 EQUIP	(10) ILLUSTRATION (a) FIG. NO.	(b) ITEM NO.
N PACZZ	4330-028-3885	CLAMPING RING ASSEMBLY 14798 (81321)	C	EA	1	*	*	*	*	*	*	*	*	9	10
N PCCZZ	5330-291-9288	GASKET CASE 21016 (81321)	C	EA	1	*	*	*	*	*	*	*	*	9	11
N XAOZZ		HEAD FILTER 29777-2 (81321)	C	EA	1									9	12
		GROUP 09 - FUEL PIPING													
MOOZZ		HOSE ASSEMBLY, FUEL: TANK LINE TO STRAINER MMC41F9 (01276) MANUFACTURE FROM:	A	EA	1									10	1
PCOZZ	4720-067-0454	HOSE, AS REQUIRED		FT		*	*	*	*	*	*			10	
PAOZZ		FITTING, 1 REQUIRED 4412-6-8 (01276)		EA		*	*	*	*	*	*			10	
PAOZZ	4730-879-5398	FITTING, 1 REQUIRED 4412-8-8 (01276)		EA		*	*	*	*	*	*			10	
MOOZZ		HOSE ASSEMBLY, TANK LINE TO STRAINER 19-2-211 (26571) MANUFACTURE FROM:	B	EA	1									10	1
PCOZZ		HOSE, AS REQUIRED 211-9 (03925)		FT		*	*	*	*	*	*			10	
PAOZZ		NUT, 2 REQUIRED 323-8S (03925)		EA		*	*	*	*	*	*			10	
PAOZZ		FITTING, 2 REQUIRED 326-8-6S (03925)		EA		*	*	*	*	*	*			10	
PAOZZ	4730-014-2435	NUT, TUBE, INVERTED FLARE: 1/2 IN., BRASS 100X8 (79470)	AB	EA	12	*	*	*	*	*	*	*	*	10	2
PAOZZ		TUBE, FUEL DRAIN: 41 11/16 IN. LG, RD ENGINE, STARBOARD POWER UNIT 5128981 (72582)	AB	EA	1	*	*	*	*	*	*	*	*	10	3
PAOZZ		TUBE, FUEL DRAIN: 43 1/4 IN. LG, RB ENGINE, STARBOARD POWER UNIT 5128983 (72582)	AB	EA	1	*	*	*	*	*	*	*	*	10	3
PAOZZ		TUBE, FUEL DRAIN: 41 11/16 IN. LG, LD ENGINE, PORT POWER UNIT 5128985 (72582)	AB	EA	1	*	*	*	*	*	*	*	*	10	3
PAOZZ		TUBE, FUEL DRAIN: 43 1/4 IN. LG, LB ENGINE, PORT POWER UNIT 5128984 (72582)	AB	EA	1	*	*	*	*	*	*	*	*	10	3
PCOZZ	4720-426-2935	HOSE ASSEMBLY, FUEL STRAINER TO PUMP: RD AND LD ENGINE 5136986 (72582)	AB	EA	2	*	*	*	*	*	*	*	*	10	4
PCOZZ	4720-436-2937	HOSE ASSEMBLY, FUEL STRAINER TO PUMP: RB AND LB ENGINE 5138077 (72582)	AB	EA	2	*	*	*	*	*	*	*	*	10	5
PAOZZ		TUBE, FILTER TO CYLINDER HEAD: RD AND LD ENGINE, 61 1/2 IN. LG 5128977 (72582)	AB	EA	1	*	*	*	*	*	*	*	*	10	6
PAOZZ		TUBE, FILTER TO CYLINDER HEAD: RB AND LB ENGINE, 61 1/2 IN. LG 5128978 (72582)	AB	EA	1	*	*	*	*	*	*	*	*	10	6
PAOZZ	2910-511-3434	TUBE, FUEL PUMP TO FILTER: RB AND LB ENGINE, 12 3/4 IN. LG 5186439 (72582)	AB	EA	2	*	*	*	*	*	*	*	*	10	7
PAOZZ	2910-511-3436	TUBE, FUEL PUMP TO FILTER: RD AND LD ENGINE, 12 3/4 IN. LG 5186440 (72582)		EA	2	*	*	*	*	*	*	*	*	10	7

(1) SMR CODE	(2) FEDERAL STOCK NUMBER	(3) DESCRIPTION REF NUMBER & MFR CODE	USABLE ON CODE	(4) UNIT OF MEAS	(5) QTY INC IN UNIT	(6) 30-DAY DS MAINT ALLOWANCE (a) 1-20	(b) 21-50	(c) 51-100	(7) 30-DAY GS MAINT ALLOWANCE (a) 1-20	(b) 21-50	(c) 51-100	(8) 1-YR ALW PER 100 EQUIP CNTGY	(9) DEPOT MAINT ALW PER 100 EQUIP	(10) ILLUSTRATION (a) FIG. NO.	(b) ITEM NO.
PAOZZ		COUPLING, PIPE SWIVEL: 90 DEG, 1/2 IN. 2047-8-8S (01276)		EA	1	•	•	•	•	•	•	•	•	10	8
PAOZZ		ADAPTER, STRAIGHT, FEMALE: 1/2 IN. TUBE, 3/4 IN. PIPE BRASS 252-8 (79470)		EA	1	•	•	•	•	•	•	•	•	10	9
PAOZZ		ADAPTER, STRAIGHT, MALE: 3/4 IN. TUBE, 1/2 IN. PIPE 48-12A12-12 (79470)		EA	1	•	•	•	•	•	•	•	•	10	10
PAOZZ		ADAPTER, STRAIGHT 238-8 (79470)		EA	1	•	•	•	•	•	•	•	•	10	11
PAOZZ		VALVE, ANGLE 752 (31938)	A	EA	1	•	•	•	•	•	•	•	•	10	12
PAOZZ	4820-953-7298	VALVE, RELIEF: 2 PSI 2606 (14959)	A	EA	1	•	•	•	•	•	•	•	•	10	13
PAOZZ	4730-888-6933	ELBOW, STREET: STRAINER INLET 137894 (72582)		EA	1	•	•	•	•	•	•	•	•	10	14
XDOZZ		WRENCH, FUEL CAP GUN20-26-27-28 (26571)	B	EA	1									10	15
PAOZZ		CAP, FUEL FILLING, VENTED MMC41F4 (98042)	A	EA	2	•	•	•	•	•	•	•	•	10	16
PAOZZ		CAP, FUEL TANK, VENTED GUN20-29 (26571)	B	EA	2	•	•	•	•	•	•	•	•	10	16
MOOZZ		GASKET: FUEL CAP MMC41M4 (98042) MANUFACTURE FROM:	A	EA	1									10	17
PCOZZ	5330-261-5761	GASKET, AS REQUIRED MMG156CLASS8 (81348)		SH		•	•	•	•	•	•			10	
PAOZZ	4730-908-6293	CLAMP, HOSE: 3 9/16 IN. MS35842-15 (96906)		EA	2	•	•	•	•	•	•	•	•	10	18
MOOZZ		HOSE, RUBBER MMC41M2 (98042) MANUFACTURE FROM:		EA	1									10	19
PCOZZ	4720-288-9756	HOSE, AS REQUIRED, 2.875 IN. ID, 3.250 IN. OD ZZH428 (81348)		FT		•	•	•	•	•	•			10	
XDOZZ		KEEPER CHAIN, FUEL TANK CAP GUN20-32 (26571)		EA	2									10	20
MOOZZ		CHAIN, JACK MMC41M5 (82021) MANUFACTURE FROM:		FT	2									10	21
PAOZZ	4010-228-9957	CHAIN, DOUBLE JACK, .105 IN. SIZE, AS REQUIRED RRC271CLASS8 (81348)		FT		•	•	•	•	•	•			10	
MOOZZ		GASKET: FUEL CAP ADAPTER MANUFACTURE FROM:		EA	1									10	22
PCOZZ	5330-261-5761	GASKET, AS REQUIRED MMG156 (81348)		SH		•	•	•	•	•	•			10	
PAOZZ	2910-459-6696	CAP, VENT: TANK VENT TUBE 155-3-4IN (41592)		EA	2	•	•	•	•	•	•	•	•	10	23
N PAOZZ	2910-477-6802	PLUG: FILL AND VENT, FUEL TANK, 2 1/2-8 THD SIZE 210-45109A4-29 (80064)	C	EA	2	•	•	•	•	•	•	•	•	11	1
N MOOZZ		GASKET NEOPRENE: FUEL TANK CAP 210-45109A4-33 (80064) MANUFACTURE FROM:	C	EA	2									11	2
N PCOZZ	5330-261-5761	GASKET NEOPRENE: FUEL TANK FILL CAP, 1/8 IN. THK MMG156 (81348)	C	SH	V	•	•	•	•	•	•			11	

	(1) SMR CODE	(2) FEDERAL STOCK NUMBER	(3) DESCRIPTION REF NUMBER & MFR CODE	USABLE ON CODE	(4) UNIT OF MEAS	(5) QTY INC IN UNIT	(6) 30-DAY DS MAINT ALLOWANCE (a) 1-20	(b) 21-50	(c) 51-100	(7) 30-DAY GS MAINT ALLOWANCE (a) 1-20	(b) 21-50	(c) 51-100	(8) 1-YR ALW PER 100 EQUIP CNTGY	(9) DEPOT MAINT ALW PER 100 EQUIP	(10) ILLUSTRATION (a) FIG. NO	(b) ITEM NO
N	MOOZZ		STAPLE: FUEL TANK CAP CHAIN 210-4510944-40 (80064) MANUFACTURE FROM:	C	EA	2									11	3
N	PAOZZ	9530-228-9231	ROD, BRASS, 3/16 IN. DIA, AS REQUIRED QQB637 (81348)		FT		•	•	•	•	•	•			11	
N	MOOZZ		CHAIN, DOUBLE JACK: .105 IN. SIZE 210-4510944-31 (80064) MANUFACTURE FROM:	C	EA	2									11	4
N	PAOZZ	4010-228-9957	CHAIN, DOUBLE JACK, .105 IN. SIZE, AS REQUIRED RRL27ICLASS8 (81348)		FT		•	•	•	•	•	•			11	
N	PAOZZ	4730-908-6292	CLAMP, HOSE: 3 1/2 IN. MS35842-14 (96906)	C	EA	8	•	•	•	•	•	•	•	•	11	5
N	MOOZZ		HOSE, MEDIUM, PRESSURE 210-4510944-35 (80064) MANUFACTURE FROM:	C	EA	2									11	6
N	PCOZZ	4720-949-0457	HOSE, W/STATIC WIRE, MEDIUM, PRESSURE, 2 1/2 IN. ID, AS REQUIRED 24MB (24161)		FT		•	•	•	•	•	•			11	
N	PAOZZ		NIPPLE, PIPE TO HOSE: FUEL TANK FILL, 2 1/2-8 THD SIZE STYLEKS (72661)	C	EA	2	•	•	•	•	•	•	•	•	11	7
N	PAOZZ		COUPLING PIPE: FUEL TANK FILL PIPE, 2 1/2-8 THD SIZE 2117-21-2IN (26403)	C	EA	2	•	•	•	•	•	•	•	•	11	8
	PAOZZ		NIPPLE, PIPE TO HOSE: FUEL TANK FILL, 2 1/2-8 THD SIZE STYLEKS (72661)	C	EA	2	•	•	•	•	•	•	•	•	11	9
N	MOOZZ		SCREEN, BRONZE 210-4510944-51 (80064) MANUFACTURE FROM:	C	EA	2									11	10
N	PAOZZ	5335-231-1203	SCREEN, BRONZE, 16 X 16 MESH, .018 IN. WIRE, AS REQUIRED RRW360 (81348)		FT		•	•	•	•	•	•			11	
N	PAOZZ	4730-194-0219	BUSHING, HEXAGON: 3/4 IN. AN912-8STD (81349)	C	EA	2	•	•	•	•	•	•	•	•	11	11
N	PAOZZ	4730-908-3193	CLAMP, HOSE MS35842-12 (96906)	C	EA	8	•	•	•	•	•	•	•	•	11	12
N	MOOZZ		HOSE, FUEL 210-4510944-46 (80064) MANUFACTURE FROM:	C	EA	2									11	13
N	PCOZZ	4720-106-6992	HOSE, FUEL, 1 IN. ID, AS REQUIRED RBL1-100 (01276)		FT		•	•	•	•	•	•			11	
N	PAOZZ	4730-196-2002	NIPPLE, PIPE, BRASS: 3/4 X 4 IN. LG WWN351TYPE1 (81348)	C	EA	2	•	•	•	•	•	•	•	•	11	14
N	PAOZZ	4730-057-8113	ELBOW: BRASS, 90 DEG, 3/4-14 THD SIZE 1211-3-4IN (26403)	C	EA	1	•	•	•	•	•	•	•	•	11	15
N	MOOZZ		PIPE, COPPER: 3/4 IN. IPS STD W 210-4510944-20 (80064) MANUFACTURE FROM:	C	EA	1									11	16
N	PAOZZ		PIPE, COPPER, TYPE W, 3/4 IN., AS REQUIRED 210-4510944-20 (80064)		FT		•	•	•	•	•	•			11	
N	PAOZZ	4730-203-0311	BEND RETURN, BRASS: 3/4 IN. MILF1181 (81349)	C	EA	2	•	•	•	•	•	•	•	•	11	17
N	PAOZZ		ELBOW, UNION: FUEL TANK OUTLET, FEMALE, 90 DEG, 3/4-14 THD SIZE 453 (26403)	C	EA	5	•	•	•	•	•	•	•	•	11	18

	(1) SMR CODE	(2) FEDERAL STOCK NUMBER	(3) DESCRIPTION REF NUMBER & MFR CODE	USABLE ON CODE	(4) UNIT OF MEAS	(5) QTY INC IN UNIT	(6) 30-DAY DS MAINT ALLOWANCE (a) 1-20	(b) 21-50	(c) 51-100	(7) 30-DAY GS MAINT ALLOWANCE (a) 1-20	(b) 21-50	(c) 51-100	(8) 1-YR ALW PER 100 EQUIP CNTGY	(9) DEPOT MAINT ALW PER 100 EQUIP	(10) ILLUSTRATION (a) FIG. NO.	(b) ITEM NO.
N	PAOZZ		COUPLING COMPRESSION: 3/4 IN., 5 IN. LONG 210 (34749)	C	EA	5	•	•	•	•	•	•	•	•	11	19
N	PAOZZ	4730-939-6247	ELBOW, MALE, BRASS: 3/4 IN. TUBE TO 3/4 IN. PIPE 49X12X12 (79470)	C	EA	2	•	•	•	•	•	•	•	•	11	20
N	PAOZZ	4730-384-0275	UNION: ENGINE FUEL BRASS, 3/4-14 THD SIZE 42X12 (88334)	C	EA	2	•	•	•	•	•	•	•	•	11	21
N	PAOZZ		VALVE RELIEF: BRONZE, 3/4-14 THD SIZE, SET AT 2 PSI 286-3-4IN (37239)	C	EA	1	•	•	•	•	•	•	•	•	11	22
N	PAOZZ		VALVE ANGLE: FUEL TANK OUTLET, BRONZE, 3/4-14 THD SIZE 246 (63686)	C	EA	2	•	•	•	•	•	•	•	•	11	23
N	PAOZZ	4730-193-2715	NIPPLE, PIPE: BRASS, 3/4-14 THD SIZE, 2 IN. LG WWT351TYPE1 (81348)	C	EA	6	•	•	•	•	•	•	•	•	11	24
N	MOOZZ		TUBE, COPPER 210-4510944-13 (80064) MANUFACTURE FROM:	C	EA	1									11	25
N	PAOZZ	4710-277-4534	TUBE, COPPER, TYPE K, BENDABLE, 5/8 IN. OD, AS REQUIRED WWT799TYPEK (81348)		FT		•	•	•	•	•	•			11	
N	PAOZZ	4730-288-9927	CONNECTOR, MALE: FUEL RETURN LINE, 1/2-14 THD SIZE 48X10 (88334)	C	EA	2	•	•	•	•	•	•	•	•	11	26
N	PAOZZ		TEE, REDUCING: 3/4 X 1/2 X 3/4 3-4INX1-2INX3-4IN (14959)	C	EA	2	•	•	•	•	•	•	•	•	11	27
N	PAOZZ	4730-254-6238	TEE: 3/4 IN. SCREWED, BRASS, FUEL TANK OUTLET WWP460CLASSA (81348)	C	EA	3	•	•	•	•	•	•	•	•	11	28
N	PAOZZ	4730-497-1709	CONNECTOR, MALE: 3/4-14 THD SIZE 48X12X12 (79470)	C	EA	4	•	•	•	•	•	•	•	•	11	29
N	MOOZZ		TUBE, COPPER 210-4510944-12 (80064) MANUFACTURE FROM:	C	EA	1									11	30
N	PAOZZ	4710-277-7748	TUBE, COPPER, TYPE K, BENDABLE, 3/4 IN. OD, AS REQUIRED WWT799 (81348)		FT		•	•	•	•	•	•			11	
	PAOZZ		NUT, LONG, FLARE, 3/4 IN., AS REQUIRED 1611X12 (79470)		EA		•	•	•	•	•	•			11	
	PAOZZ		VALVE, ANGLE: TANK DRAIN, BRONZE, 3/4-14 THD SIZE 246 (63686)	C	EA	2	•	•	•	•	•	•	•	•	12	1
N	PAOZZ	4730-196-2002	NIPPLE, PIPE: BRASS, 3/4-14 THD SIZE, 4 IN. LG WWN351 (81348)	C	EA	2	•	•	•	•	•	•	•	•	12	2
	PAOZZ		ELBOW, UNION: FUEL TANK DRAIN, FEMALE, 90 DEG, 3/4-14 THD SIZE 453 (26403)	C	EA	4	•	•	•	•	•	•	•	•	12	3
	MOOZZ		PIPE, COPPER 210-4510944-20 (80064) MANUFACTURE FROM:	C	EA	3									12	4
	PAOZZ	4710-277-6068	TUBE, COPPER, TYPE N, 3/4 IN., AS REQUIRED WWP377 (81348)		FT		•	•	•	•	•	•			12	
	PAOZZ	4730-254-6238	TEE: 3/4 IN. SCREWED BRASS, FUEL TANK TO STRAINER WWP460CLASSA (81348)	C	EA	1	•	•	•	•	•	•	•	•	12	5

	(1) SMR CODE	(2) FEDERAL STOCK NUMBER	(3) DESCRIPTION REF NUMBER & MFR CODE	USABLE ON CODE	(4) UNIT OF MEAS	(5) QTY INC IN UNIT	(6) 30-DAY DS MAINT ALLOWANCE (a) 1-20	(b) 21-50	(c) 51-100	(7) 30-DAY GS MAINT ALLOWANCE (a) 1-20	(b) 21-50	(c) 51-100	(8) 1-YR ALW PER 100 EQUIP CNTGY	(9) DEPOT MAINT ALW PER 100 EQUIP	(10) ILLUSTRATION (a) FIG. NO.	(b) ITEM NO.
N	PAOZZ		UNION: BRASS, 3/4-14 THD SIZE 489 (26403)	C	EA	1	•	•	•	•	•	•	•	•	12	6
N	PAOZZ	2910-494-3013	BLOCK, FUEL JUNCTION 5109211 (72582)	C	EA	1	•	•	•	•	•	•	•	•		
N	PAOZZ	2910-364-3452	TUBE ASSEMBLY: METAL, FUEL MANIFOLD CYLINDER HEAD TO INJECTOR INLET AND OUTLET 5151121 (72582)	C	EA	24	•	•	•	•	•	•	•	•		
N	XDOZZ		PLATE, FUEL JUNCTION 5145421 (72582)	C	EA	1										
N	PAOZZ	5306-021-2546	BOLT, FUEL JUNCTION, PLATE 215510 (72582)	C	EA	2	•	•	•	•	•	•	•	•		
N	PAOZZ	5305-269-2811	BOLT, FUEL JUNCTION BLOCK MS90726-67 (96906)	C	EA	2	•	•	•	•	•	•	•	•		
N	PAOZZ	5310-637-9541	WASHER, LOCK: 3/8 IN. MS35338-46 (72582)	C	EA	7	•	•	•	•	•	•	•	•		
N	PAOZZ	5310-732-0559	NUT, PLAIN, HEXAGON: CADMIUM PLATED, 3/8-24 THD SIZE MS51968-8 (96906)	C	EA	2	•	•	•	•	•	•	•	•		
N	PCOZZ	4720-494-1740	HOSE, JUNCTION BLOCK TO FUEL PUMP 5132452 (72582)	C	EA	1	•	•	•	•	•	•	•	•		
N	PAOZZ	4730-837-0816	NIPPLE, PIPE: 3/8 X 1 1/2 IN. LG 144606 (72582)	C	EA	1	•	•	•	•	•	•	•	•		
N	PAOZZ		VALVE, FUEL SHUTOFF 5138918 (72582)	C	EA	2	•	•	•	•	•	•	•	•		
N	PAOZZ	4730-882-8622	ELBOW: 90 DEG, 1/2 IN. TUBE, 3/8-18 THD SIZE 142647 (72582)	C	EA	1	•	•	•	•	•	•	•	•		
N	XDOZZ		BRACKET CLIP 5188248 (72582)	C	EA	5										
N	PAOZZ	5340-282-7509	CLIP, JUNCTION BLOCK TO PUMP HOSE MS21333-62 (96906)	C	EA	5	•	•	•	•	•	•	•	•		
N	PAOZZ	5305-269-3210	BOLT, CLIP TO BRACKET MS90725-59 (96906)	C	EA	5	•	•	•	•	•	•	•	•		
N	PAOZZ	5310-011-7062	NUT, PLAIN, HEXAGON: 3/8-16 THD SIZE 117062 (72582)	C	EA	5	•	•	•	•	•	•	•	•		
N	PCOZZ	4720-557-8330	HOSE, JUNCTION BLOCK TO FUEL PUMP, 45 IN. LG 5136987 (72582)	C	EA	1	•	•	•	•	•	•	•	•		
N	PAOZZ	4730-837-0816	NIPPLE: 3/8 X 1 1/2 IN. 144606 (72582)	C	EA	1	•	•	•	•	•	•	•	•		
N	PCOZZ	4720-557-8339	HOSE, FUEL PUMP TO FILTER: 5/16 IN. ID X 12 IN. LG 5130939 (72582)	C	EA	2	•	•	•	•	•	•	•	•		
N	PAOZZ	4730-639-9676	ELBOW: 90 DEG, 3/8 IN. TUBE, 1/4 IN. PIPE 118755 (72582)	C	EA	2	•	•	•	•	•	•	•	•		
N	PAOZZ	4730-595-4417	ELBOW, STREET: 1/4 IN. NPT, 90 DEG 190367 (72582)	C	EA	2	•	•	•	•	•	•	•	•		
N	PCOZZ	2990-010-0280	HOSE, FUEL RETURN: 5/16 IN. DIA X 34 1/2 IN. LG 5132613 (72582)	C	EA	2	•	•	•	•	•	•	•	•		
N	PAOZZ	4730-595-4417	ELBOW, STREET: 1/4 IN. NPT, 90 DEG 190367 (72582)	C	EA	2	•	•	•	•	•	•	•	•		
N	PAOZZ	2815-938-5760	COOLER, FUEL OIL 5136348 (72582)	C	EA	2	•	•	•	•	•	•	•	•		
N	PAOZZ	4820-051-7319	VALVE, FUEL CHECK: 1/4 IN. SWING 5174924 (72582)	C	EA	2	•	•	•	•	•	•	•	•		

(1)	(2)	(3)		(4)	(5)	(6)			(7)			(8)	(9)	(10)	
		DESCRIPTION				30-DAY DS MAINT ALLOWANCE			30-DAY GS MAINT ALLOWANCE					ILLUSTRATION	
SMR CODE	FEDERAL STOCK NUMBER	REF NUMBER & MFR CODE	USABLE ON CODE	UNIT OF MEAS	QTY INC IN UNIT	(a) 1-20	(b) 21-50	(c) 51-100	(a) 1-20	(b) 21-50	(c) 51-100	1-YR ALW PER 100 EQUIP CNTGY	DEPOT MAINT ALW PER 100 EQUIP	(a) FIG. NO.	(b) ITEM NO.
N PAOZZ	4730-278-0158	ELBOW: 45 DEG, 5/16 IN. TUBE, 1/4 IN. PIPE 143337 (72582)	C	EA	2	•	•	•	•	•	•	•	•		
N PAOZZ	4730-720-3170	ADAPTER RESTRICTED: .080 ORIFICE 5129844 (72582)	C	EA	2	•	•	•	•	•	•	•	•		
N PAOZZ	4730-014-3343	ELBOW: 90 DEG, 5/16 IN. TUBE TO 1/4-18 PIPE 143343 (72582)	C	EA	2	•	•	•	•	•	•	•	•		
N PAOZZ	5340-158-0417	CLIP, FUEL RETURN HOSE 5109020 (72582)	C	EA	1	•	•	•	•	•	•	•	•		
N PAOZZ	5340-720-6213	CLIP, FUEL RETURN HOSE MS21333-59 (96906)	C	EA	1	•	•	•	•	•	•	•	•		
N PCOZZ	4720-557-8363	HOSE, FUEL SUPPLY, FILTER TO CYLINDER HEAD: 3/8 X 47 IN. LG 5143294 (72582)	C	EA	2	•	•	•	•	•	•	•	•		
N PAOZZ	4730-277-8274	ELBOW: 90 DEG, 1/4-18 X 3/8 IN. TUBE 137423 (72582)	C	EA	4	•	•	•	•	•	•	•	•		
N PAOZZ	4730-499-3597	CLIP, FUEL SUPPLY HOSE 5177509 (72582)	C	EA	4	•	•	•	•	•	•	•	•		
N PCOZZ	4720-557-8570	HOSE, FUEL STRAINER: 1/2 X 19 7/8 IN. LONG 5109830 (72582)	C	EA	1	•	•	•	•	•	•	•	•		
N PCOZZ	4720-557-9363	HOSE, FUEL STRAINER: 5/8 X 17 3/4 IN. LONG 5120684 (72582)	C	EA	1	•	•	•	•	•	•	•	•		
N XOOZZ		HANGER, SINGLE CABLE: FUEL PIPE SUPPORT SL0106TXL (85105)	C	EA	20										
N PAOZZ	4730-461-3635	NUT, FLARE, TUBE: 5/8 IN. 1110X10 (88334)	C	EA	4	•	•	•	•	•	•	•	•		
N PAOZZ	4730-277-3874	UNION: 5/8 IN. 42X10 (88334)	C	EA	2	•	•	•	•	•	•	•	•		
N PAOZZ	4730-014-4309	NUT, FLARE, TUBE: 3/4 IN. 1110X12 (88334)	C	EA	8	•	•	•	•	•	•	•	•		
N PAOZZ	4730-187-4228	PLUG, PIPE: TYPE 3, SQUARE HEAD, 3/4-14 THD SIZE WWP471 (81348)	C	EA	2	•	•	•	•	•	•	•	•		
N MOOZZ		KEEPER CHAIN: 3/16 IN. DIA, BRASS, 4 1/2 IN. LG 210-4510944-32 (80064) MANUFACTURE FROM:	C	EA	2										
N PAOZZ	9530-228-9231	ROD, BRASS, 3/16 IN. DIA, AS REQUIRED QQB637 (81348)		FT		•	•	•	•	•	•				
N PACZZ	5120-712-0517	WRENCH, DIESEL FUEL FILLING CAP 210-4510944PC25 (80064)	C	EA	1	•	•	•	•	•	•	•	•		
N PAOZZ	5307-003-0710	STUD: FUEL PIPE SUPPORT, 3/8 X 3/4 IN. LG 101-010-110 (85105)	C	EA	12	•	•	•	•	•	•	•	•		
N PAOZZ	5307-003-0711	STUD: FUEL PIPE SUPPORT, 3/8 X 4 IN. LG 101-017-208 (85105)	C	EA	8	•	•	•	•	•	•	•	•		
N PAOZZ		HANGER, SINGLE CABLE: FUEL PIPE SUPPORT, A-900 NEOPRENE COATED SL0106TXL (85105)	C	EA	20	•	•	•	•	•	•	•	•		
MOOZZ		HOSE ASSEMBLY 19-10-211 (26571) MANUFACTURE FROM:	B	EA	1										
PCOZZ	4720-067-0454	HOSE, AS REQUIRED		FT		•	•	•	•	•	•				

(1) SMR CODE	(2) FEDERAL STOCK NUMBER	(3) DESCRIPTION REF NUMBER & MFR CODE	USABLE ON CODE	(4) UNIT OF MEAS	(5) QTY INC IN UNIT	(6) 30-DAY DS MAINT ALLOWANCE (a) 1-20	(b) 21-50	(c) 51-100	(7) 30-DAY GS MAINT ALLOWANCE (a) 1-20	(b) 21-50	(c) 51-100	(8) 1-YR ALW PER 100 EQUIP QNTTY	(9) DEPOT MAINT ALW PER 100 EQUIP	(10) ILLUSTRATION (a) FIG. NO.	(b) ITEM NO.
PAOZZ		NUT, SWIVEL, 2 REQUIRED 328-8-6S (03925)		EA		•	•	•	•	•	•				
PAOZZ		FITTING, HOSE END, 1 REQUIRED 323-8-8S (03925)		EA		•	•	•	•	•	•				
PAOZZ		ADAPTER, 1/2 IN. TUBE TO 1/2 IN. MALE PIPE, 1 REQUIRED 48-8-8 (03925)		EA		•	•	•	•	•	•				
PAOZZ		NUT, FLARE, 1/2 IN., 1 REQUIRED 1110X8 (03925)		EA		•	•	•	•	•	•				
PAOZZ	2910-511-3432	TUBE ASSEMBLY, STRAINER OUTLET TO FUEL PUMP 5186417 (72582)		EA	2	•	•	•	•	•	•	•	•		
PAOZZ	4730-019-4634	ELBOW, TUBE: 45 DEG, FUEL STRAINER TUBE 143340 (72582)		EA	2	•	•	•	•	•	•	•	•		
PAOZZ		ADAPTER, REDUCER: FUEL STRAINER TUBE 3304086 (72582)	AB	EA	4	•	•	•	•	•	•	•	•		
PAOZZ	4730-013-7409	ADAPTER, STRAIGHT: FUEL STRAINER TUBE 137409 (72582)		EA	4	•	•	•	•	•	•	•	•		
XDOZZ		CLIP, PRIMARY FILTER TO FUEL PUMP 3291251 (72582)	AB	EA	4										
XDOZZ		CLIP, PRIMARY FILTER TO FUEL PUMP TUBE 3290076 (72582)	AB	EA	4										
PAOZZ	5310-407-9566	WASHER, LOCK: TUBE CLIP, 5/16 IN. SCREW SIZE MS35338-45 (96906)	AB	EA	4	•	•	•	•	•	•	•	•		
R PAOZZ	4730-187-1417	BUSHING, PIPE: FUEL PUMP TUBE, 1/2 X 1/4 IN. 116524 (72582)	AB	EA	4	•	•	•	•	•	•	•	•		
PAOZZ	4730-203-9058	ELBOW, PIPE TO TUBE: FUEL PUMP TUBE, 3/8 IN. TUBE 90 DEG 5179969 (72582)	AB	EA	4	•	•	•	•	•	•	•	•		
PAOZZ	4730-740-2580	ADAPTER, STRAIGHT: 3/8 IN. FUEL PUMP TUBE 5179936 (72582)	AB	EA	4	•	•	•	•	•	•	•	•		
PAOZZ	5310-261-7766	WASHER, LOCK: NO. 10 TUBE CLIP 120217 (72582)	AB	EA	2	•	•	•	•	•	•	•	•		
PAOZZ	5310-009-9162	NUT, PLAIN, HEXAGON: TUBE CLIP, 10-24 THD SIZE 110633 (72582)	AB	EA	2	•	•	•	•	•	•	•	•		
PAOZZ	2910-511-3443	TUBE ASSEMBLY, FUEL DRAIN, LD AND RD ENGINE 5186388 (72582)	AB	EA	1	•	•	•	•	•	•	•	•		
PAOZZ	2910-511-3443	TUBE ASSEMBLY, FUEL DRAIN, LB AND RB ENGINE 5173776 (72582)	AB	EA	1	•	•	•	•	•	•	•	•		
PAOZZ	4730-014-1539	BUSHING, PIPE: FUEL DRAIN 141539 (72582)	AB	EA	2	•	•	•	•	•	•	•	•		
PAOZZ	4930-420-8920	ELBOW, TUBE: FUEL DRAIN TUBE, 5/16 IN., .080 RESTRICTED 5129848 (72582)	AB	EA	4	•	•	•	•	•	•	•	•		
PCOZZ	4730-740-2581	PACKING, PREFORMED: DRAIN TUBE, 3/8 IN. 5179938 (72582)	AB	EA	8	•	•	•	•	•	•	•	•		
PAOZZ	4730-740-2582	NUT, TUBE: DRAIN TUBE, 3/8 IN. 5179937 (72582)	AB	EA	8	•	•	•	•	•	•	•	•		
PAOZZ	4730-802-2237	BUSHING, PIPE: FILTER OUTLET, 1/2 X 1/4 IN. 116524 (72582)	AB	EA	4	•	•	•	•	•	•	•	•		

(1) SMR CODE	(2) FEDERAL STOCK NUMBER	(3) DESCRIPTION REF NUMBER & MFR CODE	USABLE ON CODE	(4) UNIT OF MEAS	(5) QTY INC IN UNIT	(6) 30-DAY DS MAINT ALLOWANCE (a) 1-20	(b) 21-50	(c) 51-100	(7) 30-DAY GS MAINT ALLOWANCE (a) 1-20	(b) 21-50	(c) 51-100	(8) 1-YR ALW PER 100 EQUIP CNTGY	(9) DEPOT MAINT ALW PER 100 EQUIP	(10) ILLUSTRATION (a) FIG. NO.	(b) ITEM NO.
PAOZZ	4730-301-7470	ADAPTER, TUBE: FILTER OUTLET, 1/4 IN. PIPE 444000 (72582)	AB	EA	4	•	•	•	•	•	•	•	•		
PAOZZ	4730-203-9058	ELBOW, PIPE TO TUBE: 90 DEG, FUEL DRAIN TUBE 5179969 (72582)	AB	EA	8	•	•	•	•	•	•	•	•		
PCOZZ	4730-740-2581	PACKING, PREFORMED: FUEL DRAIN TUBE, 3/8 IN. 5179938 (72582)		EA	8	•	•	•	•	•	•	•	•		
XDOZZ		CLIP, TUBE: FILTER TO CYLINDER HEAD 3223241 (72582)	AB	EA	4										
PAOZZ	5305-984-6212	SCREW, MACHINE: FUEL CLIP, NO. 10-24 THD SIZE, 3/4 IN. LG MS35206-265 (72582)	AB	EA	2	•	•	•	•	•	•	•	•		
PAOZZ	4730-203-9058	ELBOW, PIPE TO TUBE: 3/8 IN., FUEL DRAIN TUBE 5179969 (72582)	AB	EA	2	•	•	•	•	•	•	•	•		
PAOZZ	4730-740-2582	NUT, TUBE: 3/8 IN., FUEL DRAIN TUBE 5179937 (72582)	AB	EA	2	•	•	•	•	•	•	•	•		
PCOZZ	2930-354-1408	SEAL ASSEMBLY: 5/16 IN., RING, FUEL DRAIN TUBE 5177493 (72582)	AB	EA	4	•	•	•	•	•	•	•	•		
PAOZZ	4730-203-3433	NUT, TUBE: 5/16 IN., FUEL DRAIN TUBE 6177490 (72582)	AB	EA	4	•	•	•	•	•	•	•	•		
XDOZZ		CLIP, FUEL DRAIN TUBE 5182629 (72582)	AB	EA	2										
XDOZZ		CLIP, FUEL DRAIN TUBE 5176249 (72582)	AB	EA	2										
XDOZZ		CLAMP, LOOP: FUEL DRAIN TUBE 5177623 (72582)	AB	EA	4										
XDOZZ		CLAMP, LOOP: FUEL DRAIN TUBE 5110070 (72582)	AB	EA	4										
XDOZZ		CLAMP: FUEL DRAIN TUBE 5173797 (72582)	AB	EA	4										
PAOZZ	5305-206-6776	SCREW, CAP, HEXAGON HEAD: DRAIN TUBE CLAMP, 3/8-24 THD SIZE, 1 IN. LG FF585GRADE8 (81348)	AB	EA	4	•	•	•	•	•	•	•	•		
PAOZZ	5310-080-6004	WASHER, FLAT: FUEL DRAIN CLAMP, 3/8 IN. SCREW SIZE MS27183-14 (96906)	AB	EA	4	•	•	•	•	•	•	•	•		
PAOZZ	5310-637-9541	WASHER, LOCK: FUEL DRAIN TUBE, 3/8 IN. SCREW SIZE MS35338-46 (96906)	AB	EA	4	•	•	•	•	•	•	•	•		
PAOZZ	5310-732-0559	NUT, PLAIN, HEXAGON: FUEL DRAIN CLAMP, 3/8-24 THD SIZE MS51968-8 (96906)	AB	EA	4	•	•	•	•	•	•	•	•		
XDOZZ		SUPPORT, CLIP: DRAIN TUBE 5186405 (72582)	AB	EA	4										
		GROUP 10 - FUEL PUMP													
PAOZZ	5306-613-9396	BOLT ASSEMBLED WASHER: FUEL PUMP MTG 5118219 (72582)		EA	12	•	•	•	•	•	•	•	•	13	1
R KFOZZ		GASKET: FUEL PUMP MTG 5150193 (72582) (PART OF GASKET SET, FSN 5330-379-4301)		EA	8									13	2
PAOZZ	2910-524-7862	FORK, COUPLING: FUEL PUMP 5150199 (72582)		EA	4	•	•	•	•	•	•	•	•	13	3

	(1) SMR CODE	(2) FEDERAL STOCK NUMBER	(3) DESCRIPTION REF NUMBER & MFR CODE / USABLE ON CODE	(4) UNIT OF MEAS	(5) QTY INC IN UNIT	(6) 30-DAY DS MAINT ALLOWANCE (a) 1-20	(b) 21-50	(c) 51-100	(7) 30-DAY GS MAINT ALLOWANCE (a) 1-20	(b) 21-50	(c) 51-100	(8) 1-YR ALW PER 100 EQUIP CNTGY	(9) DEPOT MAINT ALW PER 100 EQUIP	(10) ILLUSTRATION (a) FIG. NO.	(b) ITEM NO
C	PAOZZ	2815-152-6233	PLUG, PIPE: FUEL PUMP DRAIN 5145009 (72582)	EA	4	*	*	*	*	*	*	*	*	13	4
	PAOZZ	4730-277-8768	ADAPTER, STRAIGHT: FUEL PUMP DRAIN 137406 (72582)	EA	4	*	*	*	*	*	*	*	*	13	5
	PAOZZ	2815-363-7980	TUBE ASSEMBLY, METAL: FUEL PUMP DRAIN 5158825 (72582)	EA	8	*	*	*	*	*	*	*	*	13	6
	PAOZZ	2910-937-6573	PUMP, ROTARY POWER DRIVEN: FUEL LB AND RB ENGINE 5198318 (72582) (INCLUDES SAME COMPONENTS AS PUMP, FSN 2910-808-2655, EXCEPT WHERE ANNOTATED)	EA	2	*	*	*	*	*	*	*	*	13	
	PAOZZ	2910-808-2655	PUMP, ROTARY POWER DRIVEN: FUEL, LD AND RD ENGINE 5199161 (72582)	EA	2	*	*	*	*	*	*	*	*	13	
	XAOZZ		SCREW, CAP, HEXAGON HEAD: COVER MTG, 1/4-20 THD SIZE, 3/4 IN. LG 183201 (72582)	EA	16									13	7
C	XAOZZ		WASHER, LOCK: COVER MTG, 1/4 IN. SCREW SIZE MS35338-44 (96906)	EA	8									13	8
	XAOZZ		COVER, FUEL PUMP: LD AND RD ENGINE 5134628 (72582) (USED ON PUMP, FSN 2910-808-2655, ONLY)	EA	2									13	9
	XAOZZ		COVER, FUEL PUMP LB AND RB ENGINE 5134560 (72582) (USED ON PUMP, FSN 2910-937-6573, ONLY)	EA	2									13	9
	XAOZZ		PIN, STRAIGHT, HEADLESS: BODY, 1/4 IN. DIA, 5/8 IN. LG 141195 (72582)	EA	4									13	10
	XAOZZ		GEAR, SPUR 5174975 (72582)	EA	2									13	1
	XAOZZ		GEARSHAFT, SPUR 5181747 (72582)	EA	2									13	12
	XAOZZ		BALL, BEARING: STEEL, 1/8 IN. DIA MS19061-3 (96906)	EA	2									13	13
	XAOZZ		SHAFT ASSEMBLY 5181746 (72582)	EA	2									13	14
	XAOZZ		SHAFT PUMP DRIVE 5178700 (72582)	EA	2									13	15
	XAOZZ		GEAR, SPUR 5174975 (72582)	EA	2									13	16
	XAOZZ		SEAL, PLAIN ENCASED: FUEL PUMP 5230007 (72582)	EA	4									13	17
	XAOZZ		PLUG, MACHINE THREAD 5174971 (72582)	EA	2									13	18
	XAOZZ		WASHER, FLAT: VALVE PLUG 5161003 (72582)	EA	2									13	19
	XAOZZ		SPRING, HELICAL, COMPRESSION 5184530 (72582)	EA	2									13	20
	XAOZZ		PIN, STRAIGHT, HEADLESS 103709 (72582)	EA	2									13	21
	XAOZZ		VALVE, RELIEF: FUEL PUMP 5174973 (72582)	EA	2									13	22
	XAOZZ		BODY, FUEL PUMP: LD AND RD ENGINE 5177292 (72582) (USED ON PUMP, FSN 2910-808-2655, ONLY)	EA	2									13	23

(1) SMR CODE	(2) FEDERAL STOCK NUMBER	(3) DESCRIPTION REF NUMBER & MFR CODE	USABLE ON CODE	(4) UNIT OF MEAS	(5) QTY INC IN UNIT	(6) 30-DAY DS MAINT ALLOWANCE (a) 1-20	(b) 21-50	(c) 51-100	(7) 30-DAY GS MAINT ALLOWANCE (a) 1-20	(b) 21-50	(c) 51-100	(8) 1-YR ALW PER 100 EQUIP CMTGY	(9) DEPOT MAINT ALW PER 100 EQUIP	(10) ILLUSTRATION (a) FIG. NO.	(b) ITEM NO.
XAOZZ		BODY, FUEL PUMP: LB AND RB ENGINE 5177293 (72582) (USED ON PUMP, FSN 2910-937-6573, ONLY)		EA	2									13	23
		GROUP 11 - ROCKER ARM COVER													
R PAOZZ	2815-347-1932	COVER ASSEMBLY, ROCKER ENGINE 5178383 (72582)		EA	4	•	•	•	•	•	•	•	•	14	1
PCOZZ	5330-171-9233	GASKET: ROCKER COVER 5150329 (72582)		EA	8	•	•	•	•	•	•	•	•	14	2
PAOZZ	5315-786-6197	PIN, ROCKER, COVER SCREW: 1/8 IN. DIA, 1 IN. LG 455532 (72582)		EA	16	•	•	•	•	•	•	•	•	14	3
PCOZZ	5330-641-0468	WASHER, NONMETALLIC: ROCKER COVER THUMBSCREW 5150333 (72582)		EA	16	•	•	•	•	•	•	•	•	14	4
PAOZZ	5305-363-8051	THUMBSCREW, ROCKER COVER 5157194 (72582)		EA	16	•	•	•	•	•	•	•	•	14	5
PAOZZ	5307-363-8059	STUD, EXTENSION, ROCKER COVER 5157192 (72582)		EA	16	•	•	•	•	•	•	•	•	14	6
		GROUP 12 - FUEL INJECTORS													
C PAOZZ	5305-269-3216	SCREW, CAP, HEXAGON HEAD: INJECTOR MTG, 3/8-16 THD SIZE, 2 IN. LG MS90725-66 (96906)		EA	24	•	•	•	•	•	•	•	•	15	1
PAOZZ	5310-276-3015	WASHER, BALL SOCKET: INJECTOR MTG 5150250 (72582)		EA	24	•	•	•	•	•	•	•	•	15	2
PAOZZ	2910-620-7460	CLAMP, INJECTOR 5111335 (72582)		EA	24	•	•	•	•	•	•	•	•	15	3
PAOFH	2910-399-5550	INJECTOR, FUEL ENGINE, HV 7 5228305 (72582)		EA	24	•	•	•	•	•	•	•	•	15	
C PAFZZ	2910-608-0485	NUT, INJECTOR BODY 5228102 (72582)		EA	1	•	•	•	•	•	•	•	•	15	4
KFFZZ		PACKING, PREFORMED: INJECTOR 5226564 (72582) (PART OF KIT, FSN 2910-073-3010)		EA	1									15	5
R PAFZZ	2910-508-0486	DEFLECTOR, INJECTOR SPILL 5228109 (72582)		EA	1	•	•	•	•	•	•	•	•	15	6
KFFZZ		VALVE ASSEMBLY 5228316 (72582) (PART OF KIT, FSN 2910-698-2936)		EA	1									15	7
KFFZZ		SEAT, VALVE INJECTOR 5228160 (72582) (PART OF KIT, FSN 2910-698-2936)		EA	1									15	8
KFFZZ		VALVE, INJECTOR 5228302 (72582) (PART OF KIT, FSN 2910-698-2936)		EA	1									15	9
KFFZZ		SPRING, HELICAL: INJECTOR VALVE 5227210 (72582) (PART OF KIT, FSN 2910-698-2936)		EA	1									15	10
KFFZZ		STEM, VALVE INJECTOR STOP 5227318 (72582) (PART OF KIT, FSN 2910-698-2936)		EA	1									15	11
PAFZZ	2910-218-6837	CAGE, INJECTOR VALVE 5228294 (72582)		EA	1	•	•	•	•	•	•	•	•	15	12
PAFZZ	2910-626-4361	VALVE, CHECK: INJECTOR 5228411 (72582)		EA	1	•	•	•	•	•	•	•	•	15	13

(1) SMR CODE	(2) FEDERAL STOCK NUMBER	(3) DESCRIPTION REF NUMBER & MFR CODE / USABLE ON CODE	(4) UNIT OF MEAS	(5) QTY INC IN UNIT	(6) 30-DAY DS MAINT ALLOWANCE (a) 1-20	(b) 21-50	(c) 51-100	(7) 30-DAY GS MAINT ALLOWANCE (a) 1-20	(b) 21-50	(c) 51-100	(8) 1-YR ALW PER 100 EQUIP CNTGY	(9) DEPOT MAINT ALW PER 100 EQUIP	(10) ILLUSTRATION (a) FIG. NO.	(b) ITEM NO.
KFFZZ		TIP INJECTOR 5228554 (72582) (PART OF KIT, FSN 2910-698-2936)	EA	1									15	14
PAFZZ	2910-600-6717	PLUNGER ASSEMBLY 5228304 (72582)	EA	1	•	•	•	•	•	•	•	•	15	15
XBFZZ		PIN, STRAIGHT, HEADLESS 5226393 (72582)	EA	1									15	16
PAFZZ	5340-294-0600	SPACER, SLEEVE, INJECTOR GEAR 5226567 (72582)	EA	1	•	•	•	•	•	•	•	•	15	17
PAFZZ	2910-272-6038	GEAR, SPUR INJECTOR 5226400 (72582)	EA	1	•	•	•	•	•	•	•	•	15	18
PAHZZ	2910-014-8344	PIN, STOP, FUEL INJECTION 5228608 (72582)	EA	1				•	•	•	•	•	15	19
PAFZZ	2910-126-9713	FOLLOWER, INJECTOR 5228104 (72582)	EA	1	•	•	•	•	•	•	•	•	15	20
PAFZZ	2910-318-3485	SPRING, HELICAL COMPRESSION: INJECTOR PLUNGER 5228292 (72582)	EA	1	•	•	•	•	•	•	•	•	15	21
PAFZZ	2910-126-9712	RACK, INJECTOR 5226719 (72582)	EA	1	•	•	•	•	•	•	•	•	15	22
PAFZZ	5315-209-7977	PIN, STRAIGHT, HEADLESS: INJECTOR 5226416 (72582)	EA	1	•	•	•	•	•	•	•	•	15	23
KFFZZ		CAP, FILTER: INJECTOR SHIPPING 5226413 (72582) (PART OF KIT, FSN 2910-073-3010)	EA	2									15	24
PAFZZ	2910-364-3133	CAP, FILTER 5226414 (72582)	EA	24	•	•	•	•	•	•	•	•	15	25
KFFZZ		GASKET: INJECTOR FILTER CAP 5226186 (72582) (PART OF KIT, FSN 2910-073-3010)	EA	2									15	26
PAFZZ	2910-209-8731	SPRING, HELICAL COMPRESSION: INJECTOR FILTER 5226415 (72582)	EA	2	•	•	•	•	•	•	•	•	15	27
KFFZZ		FILTER ELEMENT: INJECTOR 5228587 (72582) (PART OF KIT, FSN 2910-073-3010)	EA	2									15	28
PAFZZ	5315-275-4766	PIN, STRAIGHT, HEADLESS: BODY 5226912 (72582)	EA	1	•	•	•	•	•	•	•	•	15	29
PAHZZ	2910-354-1573	BODY ASSEMBLY, INJECTOR 5227931 (72582)	EA	1				•	•	•	•	•	15	30
PAFZZ	2910-698-2936	PARTS KIT, INJECTOR TIP 5228312 (72582) (CONSISTS OF)	EA	24	•	•	•	•	•	•	•	•	15	
		1-PACKING											15	2
		1-VALVE ASSEMBLY											15	7
		1-SEAT											15	8
		1-VALVE INJECTOR											15	9
		1-SPRING											15	10
		1-STEM											15	11
		1-TIP											15	14
		1-PARTS KIT, VALVE												
PAFZZ	2910-073-3010	PARTS KIT, FUEL INJECTOR 5228701 (72582) (CONSISTS OF)	EA	24	•	•	•	•	•	•	•	•	15	
		2-CAP											15	24

(1) SMR CODE	(2) FEDERAL STOCK NUMBER	(3) DESCRIPTION REF NUMBER & MFR CODE	USABLE ON CODE	(4) UNIT OF MEAS	(5) QTY INC IN UNIT	(6) 30-DAY DS MAINT ALLOWANCE (a) 1-20	(b) 21-50	(c) 51-100	(7) 30-DAY GS MAINT ALLOWANCE (a) 1-20	(b) 21-50	(c) 51-100	(8) 1-YR ALW PER 100 EQUIP CNTGY	(9) DEPOT MAINT ALW PER 100 EQUIP	(10) ILLUSTRATION (a) FIG. NO.	(b) ITEM NO.
		2-GASKET												15	26
		2-FILTER												15	28
		GROUP 13 - INJECTOR CONTROL TUBE													
	PAOZZ	5315-839-2325	PIN, COTTER: LINK PIN, 1/16 IN. DIA, 1/2 IN. LG MS24665-132 (96906)		EA	8	•	•	•	•	•	•	•	•	16	1
	PAOZZ	5315-251-9989	PIN, STRAIGHT, HEADLESS: LINK, GOVERNOR 5150265 (72582)		EA	4	•	•	•	•	•	•	•	•	16	2
	PAOZZ	5340-014-2583	RETAINER: LINK RETAINING, 13/64 IN. SPRING 142583 (72582)		EA	4	•	•	•	•	•	•	•	•	16	3
	PAOZZ	5310-262-5429	WASHER, FLAT: LINK RETAINING 5150941 (72582)		EA	4	•	•	•	•	•	•	•	•	16	4
C	PAOZZ	2815-589-1433	LINK, GOVERNOR CONTROL 5150996 (72582)		EA	2	•	•	•	•	•	•	•	•	16	5
	PAOZZ	5306-558-8187	BOLT, MACHINE: LOAD LIMIT ADJUSTING 5178817 (72582)		EA	4	•	•	•	•	•	•	•	•	16	6
C	PAOZZ	5310-880-7746	NUT, PLAIN, HEXAGON: ADJUSTING BOLT, 5/16-24 THD SIZE 214279 (72582)		EA	4	•	•	•	•	•	•	•	•	16	7
	PAFZZ	2910-316-7641	PLATE, INJECTOR: CONTROL TUBE 5178816 (72582)		EA	4	•	•	•	•	•	•	•	•	16	8
R	PAFZZ	5310-582-5965	WASHER, LOCK: ARM TO CONTROL TUBE, 1/4 IN. SCREW SIZE MS35338-44 (96906)		EA	8	•	•	•	•	•	•	•	•	16	9
	PAFZZ	5305-225-3843	SCREW, CAP, HEXAGON HEAD: ARM TO CONTROL TUBE, 1/4-20 THD SIZE, 1 IN. LG MS90728-8 (96906)		EA	8	•	•	•	•	•	•	•	•	16	10
	PAFZZ	2815-301-7708	ARM, INJECTOR: CONTROL TUBE 2090519 (72582)		EA	4	•	•	•	•	•	•	•	•	16	11
	PAFZZ	5305-068-7837	SCREW, CAP, HEXAGON HEAD: BRACKET MTG, 1/4-20 THD SIZE, 5/8 IN. LG MS90728-5 (96906)		EA	32	•	•	•	•	•	•	•	•	16	12
R	PAFZZ	5310-582-5965	WASHER, LOCK: BRACKET MTG, 1/4 IN. SCREW SIZE MS35338-44 (96906)		EA	32	•	•	•	•	•	•	•	•	16	13
C	PAFZZ	2910-673-3551	BRACKET ASSEMBLY, INJECTOR CONTROL TUBE 5120687 (72582)		EA	8	•	•	•	•	•	•	•	•	16	14
	XDFZZ		PIN, SHOULDER, HEADLESS: CONTROL TUBE, 1 1/16 IN. LG 5150259 (72582)		EA	4									16	15
	PAFFF	2910-420-8927	TUBE ASSEMBLY, INJECTOR CONTROL, RD AND LD ENGINE 5195527 (72582) (INCLUDES SAME COMPONENTS AS TUBE, FSN 2910-775-1383)		EA	2	•	•	•	•	•	•	•	•	16	16
	PAFFF	2910-775-1383	TUBE ASSEMBLY, INJECTOR CONTROL, RB AND LB ENGINE 5195532 (72582)		EA	2	•	•	•	•	•	•	•	•	16	16
	PAFZZ	5340-334-7180	SPACER, SLEEVE, CONTROL TUBE 5150843 (72582)		EA	2	•	•	•	•	•	•	•	•	16	17
C	PAFZZ	2815-363-8122	LEVER, ARM, CONTROL TUBE 5150263 (72582)		EA	2	•	•	•	•	•	•	•	•	16	18
	PAFZZ	5315-846-5928	PIN, GROOVED: LEVER TO TUBE MS35671-24 (96906)		EA	8	•	•	•	•	•	•	•	•	16	19

	(1) SMR CODE	(2) FEDERAL STOCK NUMBER	(3) DESCRIPTION REF NUMBER & MFR CODE	USABLE ON CODE	(4) UNIT OF MEAS	(5) QTY INC IN UNIT	(6) 30-DAY DS MAINT ALLOWANCE (a) 1-20	(b) 21-50	(c) 51-100	(7) 30-DAY GS MAINT ALLOWANCE (a) 1-20	(b) 21-50	(c) 51-100	(8) 1-YR ALW PER 100 EQUIP CNTGY	(9) DEPOT MAINT ALW PER 100 EQUIP	(10) ILLUSTRATION (a) FIG. NO.	(b) ITEM NO.
R	PAFZZ	5360-674-6951	SPRING, HELICAL, INJECTOR CONTROL RETAINER 5115922 (72582)		EA	2	•	•	•	•	•	•	•	•	16	20
	PAFZZ	2910-775-1380	LEVER ASSEMBLY, INCLUDING SCREW, INJECTOR CONTROL 5115322 (72582)		EA	24	•	•	•	•	•	•	•	•	16	21
	PAOZZ	5305-272-2080	SCREW, MACHINE: LEVER ASSEMBLY 5176228 (72582)		EA	48	•	•	•	•	•	•	•	•	16	22
	XAFZZ		PIN, SHOULDER, LEVER ASSEMBLY 5150033 (72582)		EA	24									16	23
			GROUP 14 - THROTTLE CONTROLS													
	PAOZZ	5305-688-2111	SCREW, CAP, HEXAGON HEAD: LEVER, 3/8-16 THD SIZE, 1 3/8 IN. LG MS90728-63 (96906)		EA	2	•	•	•	•	•	•	•	•	17	1
	PAOZZ	5310-637-9541	WASHER, LOCK: LEVER, 3/8 IN. SCREW SIZE MS35338-46 (96906)		EA	2	•	•	•	•	•	•	•	•	17	2
	XDFZZ		LEVER, THROTTLE CONTROL MASTER 5177411 (72582)		EA	2									17	3
	PAFZZ		KEY, WOODRUFF: LEVER, 1/8 X 5/8 IN. LG 103905 (72582)		EA	2	•	•	•	•	•	•	•	•	17	4
C	XDFZZ		RING, SHAFT 5177389 (72582)	AB	EA	2									17	5
C	XDFZZ		COLLAR, SHAFT MS27183-21 (96906)	AB	EA	2									17	6
	PAOFF	4730-050-4208	FITTING, LUBRICATION MS15003-1 (96906)		EA	6	•	•	•	•	•	•	•	•	17	7
	PAFZZ	2910-421-1546	BRACKET ASSEMBLY: INCLUDING BUSHINGS 5143191 (72582)		EA	2	•	•	•	•	•	•	•	•	17	8
	XAFZZ		BEARING, SLEEVE 5177361 (72582)		EA	2									17	9
R	PAOFF	5306-207-8116	BOLT, MACHINE: 5/16-24 THD SIZE, 1 3/8 IN. LG 100014 (72582)		EA	2	•	•	•	•	•	•	•	•	17	10
C	XDFZZ		LINK, THROTTLE CONTROL 5173165 (72582)		EA	2									17	11
R	PAFZZ	2910-421-1543	LEVER ASSEMBLY: W/BUSHING 5177355 (72582)		EA	2	•	•	•	•	•	•	•	•	17	12
	XAFZZ		BEARING, SLEEVE 5177357 (72582)		EA	2									17	13
	XDFZZ		PIN, GROOVED: 1/8 IN. DIA, 3/4 IN. LG MS35671-24 (96906)		EA	4									17	14
	XDFZZ		SPACER, THROTTLE 5177362 (72582)		EA	4									17	15
	XAFZZ		SPRING: RETURN, 2 3/4 IN. LG 5110199 (72582)		EA	4									17	16
	XAFZZ		HANDLE AND PIN ASSEMBLY 5177358 (72582)		EA	4									17	17
	PAOZZ	5305-688-2111	SCREW, CAP, HEXAGON HEAD: 3/8-16 THD SIZE, 1 3/8 IN. LG MS90728-63 (96906)		EA	2	•	•	•	•	•	•	•	•	17	18
	PAOZZ	5310-637-9541	WASHER, LOCK: 3/8 IN. MS35338-46 (96906)		EA	2	•	•	•	•	•	•	•	•	17	19
	PAFZZ	2910-590-1712	QUADRANT, THROTTLE CONTROL 5177363 (72582)		EA	2	•	•	•	•	•	•	•	•	17	20

	(1) SMR CODE	(2) FEDERAL STOCK NUMBER	(3) DESCRIPTION REF NUMBER & MFR CODE	USABLE ON CODE	(4) UNIT OF MEAS	(5) QTY INC IN UNIT	(6) 30-DAY DS MAINT ALLOWANCE (a) 1-20	(b) 21-50	(c) 51-100	(7) 30-DAY GS MAINT ALLOWANCE (a) 1-20	(b) 21-50	(c) 51-100	(8) 1-YR ALW PER 100 EQUIP CNTGY	(9) DEPOT MAINT ALW PER 100 EQUIP	(10) ILLUSTRATION (a) FIG. NO.	(b) ITEM NO.
C	PAFZZ		KEY, WOODRUFF: 1/8 X 5/8 IN. LG 103905 (72582)		EA	2	•	•	•	•	•	•	•	•	17	21
	PAFZZ	2990-592-0324	LEVER ASSEMBLY: W/TUBE AND BUSHINGS 5177368 (72582)		EA	2	•	•	•	•	•	•	•	•	17	22
	XAFZZ		BEARING, SLEEVE 5177381 (72582)		EA	1									17	23
	XDFZZ		COVER, THROTTLE CONTROL, SHORT 5169689 (72582)		EA	2									17	24
	XDFZZ		COVER, THROTTLE CONTROL, LONG 5169687 (72582)		EA	2									17	25
C	PAOZZ	5310-880-7746	NUT, PLAIN, HEXAGON: LINK MTG, 5/16-24 THD SIZE MS51968-5 (96906)		EA	6	•	•	•	•	•	•	•	•	17	26
	PAOZZ	5310-407-9566	WASHER, LOCK: LINK MTG, 5/16 IN. SCREW SIZE MS35338-45 (96906)		EA	6	•	•	•	•	•	•	•	•	17	27
	PAOZZ		SCREW, CAP, HEXAGON HEAD: LINK MTG, 5/16-24 THD SIZE, 1 5/8 IN. LG 100015 (72582)		EA	6	•	•	•	•	•	•	•	•	17	28
C	PAFZZ	2815-902-1832	LINK, THROTTLE CONTROL 5173166 (72582)		EA	2	•	•	•	•	•	•	•	•	17	29
	PAFZZ	2910-421-1547	SHAFT, THROTTLE CONTROL, CROSS 5177383 (72582)		EA	2	•	•	•	•	•	•	•	•	17	30
C	PAFZZ	5310-012-1902	NUT, PLAIN, HEXAGON: TURNBUCKLE, 1/4-28 THD SIZE MS51968-2 (96906)		EA	2	•	•	•	•	•	•	•	•	17	31
	PAFZZ	5340-785-8286	TURNBUCKLE, THROTTLE CONTROL 5178006 (72582)		EA	4	•	•	•	•	•	•	•	•	17	32
	PAFZZ	2910-421-1548	ROD ASSEMBLY, THROTTLE, BELL CRANK 5177418 (72582)		EA	2	•	•	•	•	•	•	•	•	17	33
	PAFZZ	2910-435-2440	ROD, THROTTLE CONTROL 5177419 (72582)		EA	4	•	•	•	•	•	•	•	•	17	33
C	PAFZZ	5310-869-2981	NUT, PLAIN, HEXAGON: ROD, 1/4-28 LH THD SIZE 121912 (72582)		EA	2	•	•	•	•	•	•	•	•	17	34
	PAFZZ	2910-588-8444	COUPLING, THROTTLE CONTROL 2090270 (72582)		EA	2	•	•	•	•	•	•	•	•	17	35
C	PAFZZ	5315-839-2325	PIN, COTTER: 1/16 IN. DIA, 1/2 IN. LG MS24665-132 (96906)		EA	4	•	•	•	•	•	•	•	•	17	36
C	PAFZZ	5315-588-8493	PIN, STRAIGHT, HEADLESS: THROTTLE CONTROL 5173675 (72582)		EA	2	•	•	•	•	•	•	•	•	17	37
	PAFZZ	5315-251-9989	PIN, STRAIGHT, HEADLESS: THROTTLE CONTROL 5150265 (72582)		EA	4	•	•	•	•	•	•	•	•	17	38
	PAFZZ	5315-839-5820	PIN, COTTER: 1/6 X 3/4 IN. LG MS24665-134 (96906)		EA	2	•	•	•	•	•	•	•	•	17	39
	PAFZZ	2910-435-7590	SHAFT, THROTTLE LEVER: 7 7/16 IN. LG 5171151 (72582)		EA	2	•	•	•	•	•	•	•	•	17	40
	PAOZZ	5305-688-2111	SCREW, CAP, HEXAGON HEAD: 3/8-16 THD SIZE, 1 3/8 IN. LG 186612 (72582)		EA	8	•	•	•	•	•	•	•	•	17	41
	PAOZZ	5310-637-9541	WASHER, LOCK: CROSS-SHAFT BRACKET, 3/8 IN. SCREW SIZE MS35338-46 (96906)		EA	8	•	•	•	•	•	•	•	•	17	42
	PAFZZ	2910-421-1549	BEARING, ROD ASSEMBLY 5114848 (72582)		EA	8	•	•	•	•	•	•	•	•	17	

	(1) SMR CODE	(2) FEDERAL STOCK NUMBER	(3) DESCRIPTION REF NUMBER & MFR CODE	USABLE ON CODE	(4) UNIT OF MEAS	(5) QTY INC IN UNIT	(6) 30-DAY DS MAINT ALLOWANCE (a) 1-20	(b) 21-50	(c) 51-100	(7) 30-DAY GS MAINT ALLOWANCE (a) 1-20	(b) 21-50	(c) 51-100	(8) 1-YR ALW PER 100 EQUIP CNTGY	(9) DEPOT MAINT ALW PER 100 EQUIP	(10) ILLUSTRATION (a) FIG. NO.	(b) ITEM NO.
	PCFZZ	2910-588-8443	SEAL, THROTTLE CONTROL, COVER 5169674 (72582)		EA	2	*	*	*	*	*	*	*	*	17	
	PCFZZ	5330-892-1764	GASKET: THROTTLE CONTROL COVER 5150269 (72582)		EA	4	*	*	*	*	*	*	*	*	17	
			GROUP 15 - HEAT EXCHANGER, ENGINE													
	PAOZZ	4730-909-8627	CLAMP, HOSE MS35842-13 (96906)		EA	4	*	*	*	*	*	*	*	*	18	1
	PCOZZ	4720-278-5051	HOSE, PREFORMED: 1 7/8 IN. ID X 2 IN. LG 5173020 (72582)		EA	2	*	*	*	*	*	*	*	*	18	2
	PAOZZ	2930-590-1716	TEE, PIPE: KEEL COOLER 5186395 (72582)		EA	2	*	*	*	*	*	*	*	*	18	3
	PAOZZ	4730-909-8627	CLAMP, HOSE MS35842-13 (96906)		EA	4	*	*	*	*	*	*	*	*	18	4
	PCOZZ	4720-278-5051	HOSE, PREFORMED: KEEL COOLER, 1 7/8 IN. ID X 2 IN. LG 5173020 (72582)		EA	2	*	*	*	*	*	*	*	*	18	5
	PAOZZ	4730-277-8182	TEE, HOSE: THERMOSTAT HOUSING 5186394 (72582)		EA	2	*	*	*	*	*	*	*	*	18	6
C	PAOZZ	5305-269-3208	SCREW, CAP, HEXAGON HEAD: OVERFLOW TUBE CLIP MS35295-57 (96906)	AB	EA	4	*	*	*	*	*	*	*	*	18	7
C	PAOZZ	5310-637-9541	WASHER, LOCK: OVERFLOW TUBE CLIP MS35338-46 (96906)	AB	EA	4	*	*	*	*	*	*	*	*	18	8
	XDOZZ		CLIP, TUBE: OVERFLOW TUBE 3291487 (72582)	AB	EA	4									18	9
	XDOZZ		TUBE, OVERFLOW: HEAT EXCHANGER 5168826 (72582)		EA	4									18	10
	PAOZZ	4730-814-3343	ELBOW: EXPANSION TANK OVERFLOW 1433443 (72582)		EA	4	*	*	*	*	*	*	*	*	18	11
	PAOZZ	4820-752-9040	COCK, DRAIN: THERMOSTAT HOUSING, 1/8 IN. MS35782-4 (96906)		EA	4	*	*	*	*	*	*	*	*	18	12
	PAOZZ	4820-849-1220	COCK, DRAIN: 1/4 IN., WATER INLET TUBE MS35782-5 (96906)		EA	4	*	*	*	*	*	*	*	*	18	13
C	PAOZZ	5305-225-8502	SCREW, CAP, HEXAGON HEAD: THERMOSTAT HOUSING, OUTLET MTG, 5/16-18 THD SIZE, 1 1/2 IN. LG MS90725-38 (96906)		EA	4	*	*	*	*	*	*	*	*	18	14
	PAOZZ	5310-407-9566	WASHER, LOCK: THERMOSTAT HOUSING, OUTLET MTG, 5/16 IN. SCREW SIZE MS35338-45 (96906)		EA	32	*	*	*	*	*	*	*	*	18	15
	XDOZZ		OUTLET, THERMOSTAT HOUSING 5172944 (72582)		EA	4									18	16
	PCOZZ	5330-298-0504	GASKET: THERMOSTAT HOUSING, OUTLET 5172923 (72582)		EA	4	*	*	*	*	*	*	*	*	18	17
	PAOZZ	5305-543-2419	SCREW, CAP, HEXAGON HEAD: THERMOSTAT HOUSING MTG, 3/8-16 THD SIZE, 1 1/8 IN. LG MS90728-61 (96906)		EA	16	*	*	*	*	*	*	*	*	18	18
	PAOZZ	5310-637-9541	WASHER, LOCK: THERMOSTAT HOUSING MTG, 3/8 IN. SCREW SIZE MS35338-46 (96906)		EA	16	*	*	*	*	*	*	*	*	18	19
	XDOZZ		HOUSING, THERMOSTAT 5178427 (72582)		EA	4									18	20

	(1) SMR CODE	(2) FEDERAL STOCK NUMBER	(3) DESCRIPTION REF NUMBER & MFR CODE	USABLE ON CODE	(4) UNIT OF MEAS	(5) QTY INC IN UNIT	(6) 30-DAY DS MAINT ALLOWANCE (a) 1-20	(b) 21-50	(c) 51-100	(7) 30-DAY GS MAINT ALLOWANCE (a) 1-20	(b) 21-50	(c) 51-100	(8) 1-YR ALW PER 100 EQUIP CNTGY	(9) DEPOT MAINT ALW PER 100 EQUIP	(10) ILLUSTRATION (a) FIG. NO.	(b) ITEM NO.
	PCOZZ	6620-570-6295	GASKET: THERMOSTAT 5167761 (72582)		EA	4	•	•	•	•	•	•	•	•	18	21
	PAOZZ	6620-377-3497	THERMOSTAT ASSEMBLY, HEAT CONTROL 5172141 (72582)		EA	2	•	•	•	•	•	•	•	•	18	22
	PAFZZ	5305-071-1772	SCREW, CAP, HEXAGON HEAD: TANK MTG MS90725-119 (96906)		EA	16	•	•	•	•	•	•	•	•	18	23
	PAFZZ	5310-584-5272	WASHER, LOCK: TANK MTG, 1/2 IN. SCREW SIZE MS35338-48 (96906)		EA	16	•	•	•	•	•	•	•	•	18	24
	XDFZZ		TANK ASSEMBLY, EXPANSION 5119718 (72582)		EA	1									18	25
	PACZZ	2930-462-8114	CAP: EXPANSION TANK 850901 (72582)		EA	1	•	•	•	•	•	•	•	•	18	26
	PCCZZ	2930-786-6193	GASKET: EXPANSION TANK NECK 5118061 (72582)		EA	1	•	•	•	•	•	•	•	•	18	27
	XDFZZ		NECK: EXPANSION TANK FILLER 5118060 (72582)		EA	1									18	28
	PAFZZ	4730-011-3175	PLUG, PIPE: 1/8 IN., BRASS 113175 (72582)		EA	1	•	•	•	•	•	•	•	•	18	29
	PAFZZ	4730-604-7953	PLUG, PIPE: 1 IN. 5111798 (72582)		EA	1	•	•	•	•	•	•	•	•	18	30
	PAFZZ	4730-011-3177	PLUG, PIPE: EXPANSION TANK 113177 (72582)		EA	8	•	•	•	•	•	•	•	•	18	31
	PAFZZ	5306-225-8500	BOLT, MACHINE: INLET COVER MTG, 5/16-18 THD SIZE MS90725-35 (96906)		EA	20	•	•	•	•	•	•	•	•	18	32
	PAFZZ	5310-407-9566	WASHER, LOCK: INLET COVER MTG, 5/16 IN. SCREW SIZE MS35338-45 (96906)		EA	20	•	•	•	•	•	•	•	•	18	33
R	XDFZZ		COVER: INLET HEAT EXCHANGER TUBE 5121893 (72582)		EA	1									18	34
	PCFZZ	5330-292-3482	GASKET: HEAT EXCHANGER COVER 5167764 (72582)		EA	1	•	•	•	•	•	•	•	•	18	35
C	PAFZZ	5305-225-8502	SCREW, CAP, HEXAGON HEAD: PLATE MTG, 5/16-18 THD SIZE, 1 1/2 IN. LG MS90725-38 (96906)		EA	20	•	•	•	•	•	•	•	•	18	36
	PAFZZ	5310-407-9566	WASHER, LOCK: PLATE MTG, 5/16 IN. SCREW SIZE MS35338-45 (96906)		EA	40	•	•	•	•	•	•	•	•	18	37
	XDFZZ		PLATE: COVER, EXPANSION TANK 5172948 (72582)		EA	2									18	38
	PCFZZ	5330-292-3482	GASKET: HEAT EXCHANGER COVER 5167764 (72582)		EA	1	•	•	•	•	•	•	•	•	18	39

(1) SMR CODE	(2) FEDERAL STOCK NUMBER	(3) DESCRIPTION REF NUMBER & MFR CODE	USABLE ON CODE	(4) UNIT OF MEAS	(5) QTY INC IN UNIT	(6) 30-DAY DS MAINT ALLOWANCE (a) 1-20	(b) 21-50	(c) 51-100	(7) 30-DAY GS MAINT ALLOWANCE (a) 1-20	(b) 21-50	(c) 51-100	(8) 1-YR ALW PER 100 EQUIP CNTGY	(9) DEPOT MAINT ALW PER 100 EQUIP	(10) ILLUSTRATION (a) FIG. NO.	(b) ITEM NO.
		GROUP 16 - ENGINE COOLING PIPING													
PAOZZ	4730-908-6292	CLAMP, HOSE: 2 7/8 IN. MS35842-14 (96906)	A	EA	2	*	*	*	*	*	*	*	*	19	1
MOOZZ		HOSE, CONNECTING: HEAT EXCHANGER TO ENGINE, 2 3/8 IN. ID MMC40F38 (98042) MANUFACTURE FROM:	A	EA	1									19	2
PCOZZ	4720-235-4121	HOSE, AS REQUIRED		FT		*	*	*	*	*	*			19	
PAOZZ	4730-909-8627	CLAMP, HOSE: 2 5/8 IN. MS35842-13 (96906)	AC	EA	8	*	*	*	*	*	*	*	*	19	3
MOOZZ		HOSE, CONNECTING: 2 1/8 IN. ID MMC40F40 (98042) MANUFACTURE FROM:	A	EA	1									19	4
PCOZZ	4720-235-4122	HOSE, AS REQUIRED		FT		*	*	*	*	*	*			19	
MOOZZ		PACKING, FLAX: BULKHEAD FITTING, 1/4 IN. SQUARE MMC40M13 (98042) MANUFACTURE FROM:	A	EA	1									19	5
PCOZZ	5330-543-3205	PACKING, AS REQUIRED		FT		*	*	*	*	*	*			19	
PAOZZ	4730-908-3194	CLAMP, HOSE MS35842-11 (96906)	A	EA	2	*	*	*	*	*	*	*	*	19	6
MOOZZ		HOSE, RUBBER: 5/8 IN. ID MMC40F56 (98042) MANUFACTURE FROM:	A	EA	1									19	7
PCOZZ	4720-235-4134	HOSE, AS REQUIRED		FT		*	*	*	*	*	*			19	
PAOZZ		COCK, DRAIN: 3/4 IN. IPS, BRONZE 81413-8 (14959)	A	EA	9	*	*	*	*	*	*	*	*	19	8
PAOZZ		VALVE, CHECK: 2 IN., SOLDER 1303-2 (14959)	A	EA	2	*	*	*	*	*	*	*	*	19	9
PAOZZ		VALVE, GLOBE: 1/2 IN., BRONZE 12501-2 (14959)	A	EA	1	*	*	*	*	*	*	*	*	19	10
XDOZZ		GAGE, WATER 627 (14959) (INCLUDES GLASS, WATER AND ANGLE VALVES, 14 IN. CENTERS)	A	EA	2									19	11
PAOZZ		GLASS, WATER GAGE: 5/8 IN. OD X 13 IN. LG 5-8X13 (14959)		EA	2	*	*	*	*	*	*	*	*	19	
PAOZZ		VALVE, CHECK: 3/4 IN., BRONZE, SOLDER 13033-4 (14959)	A	EA	2	*	*	*	*	*	*	*	*	19	12
PAFZZ	5310-842-1699	NUT, PLAIN, HEXAGON: PIPE DECK PLATE, BRASS, 1/4-20 THD SIZE MS35691-4 (96906)	C	EA	8	*	*	*	*	*	*	*	*	20	1
PAFZZ	5310-184-8970	WASHER, LOCK: PIPE DECK PLATE, BRASS, 1/4 IN. SCREW SIZE MS35338-101 (96906)	C	EA	8	*	*	*	*	*	*	*	*	20	2
PAFZZ	5305-206-3694	SCREW, MACHINE: PIPE DECK PLATE, BRASS, FLATHEAD, COUNTERSINK, 1/4-20 THD SIZE, 1 1/2 IN. LG MS35198-75 (96906)	C	EA	8	*	*	*	*	*	*	*	*	20	3
XDOZZ		PIPE DECK PLATE, W/KEY: 2 1/2 IN., BRONZE F10528 (46576) (MARKED FOR WATER)		EA	2									20	4
N PAOZZ	4730-908-6293	CLAMP, HOSE MS35842-15 (96906)	C	EA	8	*	*	*	*	*	*	*	*	20	5

	(1) SMR CODE	(2) FEDERAL STOCK NUMBER	(3) DESCRIPTION REF NUMBER & MFR CODE	USABLE ON CODE	(4) UNIT OF MEAS	(5) QTY INC IN UNIT	(6) 30-DAY DS MAINT ALLOWANCE (a) 1-20	(b) 21-50	(c) 51-100	(7) 30-DAY GS MAINT ALLOWANCE (a) 1-20	(b) 21-50	(c) 51-100	(8) 1-YR ALW PER 100 EQUIP CNTGY	(9) DEPOT MAINT ALW PER 100 EQUIP	(10) ILLUSTRATION (a) FIG. NO.	(b) ITEM NO.
N	MOOZZ		HOSE, RUBBER: 2 7/8 IN. ID X 6 IN. LG 35W (24161) MANUFACTURE FROM:	C	EA	2									20	6
N	PAOZZ	4720-288-9756	HOSE, RUBBER, 2 7/8 IN. ID, AS REQUIRED Z7H428TYPE1GRADEBCLASS2 (81348)		FT		•	•	•	•	•	•			20	
	MOOZZ		PIPE, BRASS: EXPANSION TANK FILL, 2 1/2 IN. IPS X 7 1/2 IN. LG 209-4510945-38 (80064) MANUFACTURE FROM:	C	EA	2									20	7
	PAOZZ	4710-278-8772	PIPE, BRASS, 2 1/2 IN. IPS, SCHEDULE 40, 7 1/2 IN. REQUIRED WWP351CLASS1 (81348)		FT		•	•	•	•	•	•			20	
N	XDOZZ		UNION, MALE THREADED: TUBE TO EXPANSION TANK, 1/4-18 THD SIZE 3676 (63686)	C	EA	1									20	8
N	MOOZZ		PIPE, THREADLESS: 1/4 IN., COPPER, .540 IN. OD 209-4510945-18 (80064) MANUFACTURE FROM:	C	EA	1									20	9
N	PAOZZ	4710-277-6099	PIPE, COPPER, 1/4 IN., AS REQUIRED WWP377 (81348)		FT		•	•	•	•	•	•			20	
N	XDOZZ		ELBOW: SILBRAZE, 90 DEG, 1/4 IN. 3605-1-4IN (63686)	C	EA	4									20	10
	MOOZZ		PIPE, THREADLESS: 1/4 IN., COPPER 209-4510945-18 (80064) MANUFACTURE FROM:	C	EA	1									20	11
	PAOZZ	4710-277-6099	PIPE, COPPER, 1/4 IN., AS REQUIRED WWP377 (81348)		FT		•	•	•	•	•	•			20	
	XDOZZ		ELBOW: 90 DEG, BRONZE, 1/4 IN., THREADLESS 3605-1-4IN (63686)	C	EA	1									20	12
	MOOZZ		PIPE, THREADLESS: 1/4 IN., COPPER 209-4510945-18 (80064) MANUFACTURE FROM:	C	EA	1									20	13
	PAOZZ	4710-277-6099	PIPE, COPPER, 1/4 IN., AS REQUIRED WWP377 (81348)		FT		•	•	•	•	•	•			20	
N	PAOZZ	4730-908-3194	HOSE, CLAMP: 1 1/4 IN. MS35842-11 (96906)	C	EA	8	•	•	•	•	•	•	•	•	20	14
N	MOOZZ		HOSE, FLEXIBLE: 1/2 IN. ID 209-4510945-19 (80064) MANUFACTURE FROM:	C	EA	2									20	15
N	PDOZZ	4720-189-2779	HOSE, FLEXIBLE, 1/2 IN., 6 IN. REQUIRED FOR EA HOSE ZZH428TYPE1GRADEBCLASS2 (81348)		FT		•	•	•	•	•	•			20	
	MOOZZ		PIPE, THREADLESS: 1/4 IN., COPPER 209-4510945-18 (80064) MANUFACTURE FROM:	C	EA	1									20	16
	PAOZZ	4710-277-6099	PIPE, COPPER, 1/4 IN., AS REQUIRED WWP377 (81348)		FT		•	•	•	•	•	•			20	
	MOOZZ		PIPE, THREADLESS: 1/4 IN., COPPER 209-4510945-18 (80064) MANUFACTURE FROM:	C	EA	1									20	17
	PAOZZ	4710-277-6099	PIPE, COPPER, 1/4 IN., AS REQUIRED WWP377 (81348)		FT		•	•	•	•	•	•			20	
N	XDOZZ		TEE: SILBRAZE, 1/4 IN., NO. 150 3610-1-4IN (63686)	C	EA	2									20	18

	(1) SMR CODE	(2) FEDERAL STOCK NUMBER	(3) DESCRIPTION REF NUMBER & MFR CODE	USABLE ON CODE	(4) UNIT OF MEAS	(5) QTY INC IN UNIT	(6) 30-DAY DS MAINT ALLOWANCE (a) 1-20	(b) 21-50	(c) 51-100	(7) 30-DAY GS MAINT ALLOWANCE (a) 1-20	(b) 21-50	(c) 51-100	(8) 1-YR ALW PER 100 EQUIP CNTGY	(9) DEPOT MAINT ALW PER 100 EQUIP	(10) ILLUSTRATION (a) FIG. NO.	(b) ITEM NO.
	MOOZZ		PIPE, THREADLESS: 1/4 IN., COPPER 209-4510945-18 (80064) MANUFACTURE FROM:	C	EA	1									20	19
	PAOZZ	4710-277-6099	PIPE, COPPER, 1/4 IN., AS REQUIRED WWP377 (81348)		FT		*	*	*	*	*	*			20	
	XDOZZ		UNION, MALE THREADED: PIPE TO ELBOW, 1/4-18 THD SIZE 3676 (63686)	C	EA	1									20	20
N	XDOZZ		ELBOW, STREET: PIPE, 90 DEG, 1/4-18 THD SIZE, EXPANSION TANK OUTLET 3409 (63686)	C	EA	2									20	21
N	XDOZZ		ELBOW, UNION: 90 DEG, MALE THREADED, 1 INCH 3732-11N (63686)	C	EA	1									20	22
	MOOZZ		PIPE, THREADLESS: 1 IN. ID, COPPER 209-4510945-26 (80064) MANUFACTURE FROM:	C	EA	1									20	23
	PAOZZ	4710-277-6069	PIPE, COPPER, 1 IN. ID, AS REQUIRED WWP377 (81348)		FT		*	*	*	*	*	*			20	
N	XDOZZ		ELBOW, PIPE: THREADLESS, 45 DEG, 1 IN. 3607-11N (63686)	C	EA	2									20	24
	MOOZZ		PIPE, THREADLESS: 1 IN. ID, COPPER 209-4510945-26 (80064) MANUFACTURE FROM:	C	EA	1									20	25
	PAOZZ	4710-277-6069	PIPE, COPPER, 1 IN., AS REQUIRED WWP377 (81348)		FT		*	*	*	*	*	*			20	
N	PAOZZ	4820-287-2302	VALVE, SWING CHECK: NO. 200, SILBRAZE, 1 IN. 420WS11N (63686)	C	EA	2	*	*	*	*	*	*	*	*	20	26
N	MOOZZ		PIPE, THREADLESS: 1 IN. ID, COPPER 209-4510945-26 (80064) MANUFACTURE FROM:	C	EA	1									20	27
N	PAOZZ	4710-277-6069	PIPE, COPPER, 1 IN., AS REQUIRED WWP377 (81348)		FT		*	*	*	*	*	*			20	
N	XDOZZ		ELBOW: 90 DEG, 1 IN. 3605-11N (63686)	C	EA	2									20	28
	MOOZZ		PIPE, THREADLESS: 1 IN. ID, COPPER 209-4510945-1 (80064) MANUFACTURE FROM:	C	EA	1									20	29
	PAOZZ	4710-277-6069	PIPE, COPPER, 1 IN., AS REQUIRED WWP377 (81348)		FT		*	*	*	*	*	*			20	
	XDOZZ		ELBOW: 90 DEG, 1 IN. 3605-11N (63686)	C	EA	2									20	30
	MOOZZ		PIPE, THREADLESS: 1 IN. ID, COPPER 209-4510945-26 (80064) MANUFACTURE FROM:	C	EA	1									20	31
	PAOZZ	4710-277-6069	PIPE, COPPER, 1 IN., AS REQUIRED WWP377 (81348)		FT		*	*	*	*	*	*			20	
N	PAOZZ	4730-908-3193	CLAMP, HOSE: 2 IN. MS35842-12 (96906)	C	EA	8	*	*	*	*	*	*	*	*	20	32
N	MOOZZ		HOSE, FLEXIBLE: 1 1/4 IN. ID 209-4510945-24 (80064) MANUFACTURE FROM:	C	EA	2									20	33
N	PDOZZ	4720-235-4120	HOSE, FLEXIBLE: 1 1/4 IN. ID, 6 IN. REQUIRED FOR EA HOSE ZZH428TYPE1GRADEBCLASS10R2 (81348)		FT		*	*	*	*	*	*			20	
	XDOZZ		ELBOW, UNION: 90 DEG, MALE THREADED, 1 INCH 3732-11N (63686)	C	EA	1									20	34

	(1) SMR CODE	(2) FEDERAL STOCK NUMBER	(3) DESCRIPTION REF NUMBER & MFR CODE	USABLE ON CODE	(4) UNIT OF MEAS	(5) QTY INC IN UNIT	(6) 30-DAY DS MAINT ALLOWANCE (a) 1-20	(b) 21-50	(c) 51-100	(7) 30-DAY GS MAINT ALLOWANCE (a) 1-20	(b) 21-50	(c) 51-100	(8) 1-YR ALW PER 100 EQUIP CNTGY	(9) DEPOT MAINT ALW PER 100 EQUIP	(10) ILLUSTRATION (a) FIG. NO.	(b) ITEM NO.
	XDOZZ		ELBOW: 90 DEG, 1 IN. 3605-11N (63686)	C	EA	1									20	35
	MOOZZ		PIPE, THREADLESS: 1 IN. ID, COPPER 209-4510945-1 (80064) MANUFACTURE FROM:	C	EA	1									20	36
	PAOZZ	4710-277-6069	PIPE, COPPER, 1 IN., AS REQUIRED WWP377 (81348)		FT		•	•	•	•	•	•			20	
	XDOZZ		UNION, MALE THREADED: PIPE TO ELBOW, 1/4-18 THD SIZE 3676 (63686)	C	EA	1									20	37
	XDOZZ		ELBOW, STREET: PIPE TO ENGINE, 90 DEG, 1/4-18 THD SIZE 3409 (63686)	C	EA	2									20	38
N	XDOZZ		WATER GAGE: 14 IN. CENTER, 1/2 IN. BRONZE 630 (14959)	C	EA	2									20	39
N	PAOZZ		GLASS, WATER GAGE: 5/8 IN. OD X 13 IN. LG 5-8X13 (14959)	C	EA	2	•	•	•	•	•	•	•	•		
N	XDOZZ		REDUCING COUPLING: 1/2 X 3/8 IN. 3425 (63686)	C	EA	4									20	40
N	XDOZZ		NIPPLE, PIPE: WATER GAGE, 3/8-18 THD SIZE, 3 1/2 IN. LG WWN351TYPE1 (81348)	C	EA	4									20	41
N	XDOZZ		ELBOW, STREET: WATER GAGE, 90 DEG, 3/8-18 THD SIZE 3409-3-8IN (63686)	C	EA	4									20	42
N	PAFZZ	5310-732-0558	NUT, PLAIN, HEXAGON: EXPANSION TANK MTG BAR, CADMIUM PLATED, 3/8-16 THD SIZE MS51967-8 (96906)	C	EA	8	•	•	•	•	•	•	•	•	20	43
N	PAFZZ	5310-637-9541	WASHER, LOCK: EXPANSION TANK MTG BAR, CADMIUM PLATED, 3/8 IN. SCREW SIZE MS35338-46 (96906)	C	EA	8	•	•	•	•	•	•	•	•	20	44
N	PAFZZ	5305-269-3210	SCREW, CAP, HEXAGON HEAD: EXPANSION TANK MTG BAR, CADMIUM PLATED, 3/8-16 THD SIZE, 7/8 IN. LG MS90725-59 (96906)	C	EA	8	•	•	•	•	•	•	•	•	20	45
N	MFFZZ		BAR, FLAT 209-4510945-28 (80064) MANUFACTURE FROM:	C	EA	8									20	46
N	PAFZZ	9510-229-4778	BAR, FLAT, 1 X 1/2 X 1/4 IN., 28 1/2 IN. REQUIRED FOR EA BAR QQS634COMPC1045 (81348)		FT		•	•	•	•	•	•			20	
N	XDFZZ		EXPANSION TANK: ENGINE COOLING 209-4510945-10 (80064)	C	EA	2									20	47
N	MFFZZ		LINER, RUBBER: 1/16 IN. THK 209-4510945-31 (80064) MANUFACTURE FROM:	C	SH	1									20	48
N	PCFZZ	5330-290-7911	GASKET, NEOPRENE, 1/16 IN. THK, AS REQUIRED HHG156 (81348)		SH		•	•	•	•	•	•			20	
N	PAOZZ	4730-908-6292	CLAMP, HOSE: 3 1/2 IN. MS35842-14 (96906)	C	EA	16	•	•	•	•	•	•	•	•	20	49
N	MOOZZ		HOSE, FLEXIBLE: 2 3/8 IN. ID 209-4510945-1 (80064) MANUFACTURE FROM:	C	EA	4									20	50
N	PCOZZ	4720-235-4121	HOSE, FLEXIBLE, 2 3/8 IN. ID, 3 IN. OD, 6 IN. REQUIRED FOR EA HOSE ZZH428TYPE2GRADEACLASS1 (81348)		FT		•	•	•	•	•	•			20	

	(1) SMR CODE	(2) FEDERAL STOCK NUMBER	(3) DESCRIPTION REF NUMBER & MFR CODE	USABLE ON CODE	(4) UNIT OF MEAS	(5) QTY INC IN UNIT	(6) 30-DAY DS MAINT ALLOWANCE (a) 1-20	(b) 21-50	(c) 51-100	(7) 30-DAY GS MAINT ALLOWANCE (a) 1-20	(b) 21-50	(c) 51-100	(8) 1-YR ALW PER 100 EQUIP CNTGY	(9) DEPOT MAINT ALW PER 100 EQUIP	(10) ILLUSTRATION (a) FIG. NO.	(b) ITEM NO.
N	MOOZZ		TUBE, COPPER: 2 3/8 IN. OD 209-4510945-3 (80064) MANUFACTURE FROM:	C	EA	1									20	51
	PAOZZ	4710-277-4613	TUBE, COPPER, 2 3/8 IN. OD, AS REQUIRED MILT24107 (96906)		FT		•	•	•	•	•	•			20	
N	XDOZZ		ELBOW, PIPE: 2 IN. ID, 90 DEG 3628 (63686)	C	EA	2									20	52
	MOOZZ		TUBE, COPPER: 2 3/8 IN. OD 209-4510945-3 (80064) MANUFACTURE FROM:	C	EA	1									20	53
	PAOZZ	4710-277-4613	TUBE, COPPER, 2 3/8 IN. OD, AS REQUIRED MILT24107 (96906)		FT		•	•	•	•	•	•			20	
	XDOZZ		ELBOW, PIPE: 2 IN. ID, 90 DEG, SILBRAZE 3628 (63686)	C	EA	2									20	54
	MOOZZ		TUBE, COPPER: 2 3/8 IN. ID 209-4510945-3 (80064) MANUFACTURE FROM:	C	EA	1									20	55
	PAOZZ	4710-277-4613	PIPE, COPPER, 2 3/8 IN. OD, AS REQUIRED MILT24107 (96906)		FT		•	•	•	•	•	•			20	
N	XDOZZ		ELBOW, TUBE: 2 IN., 45 DEG 3607-2IN (63686)	C	EA	2									20	56
	MOOZZ		TUBE, COPPER: 2 3/8 IN. ID 209-4510945-3 (80064) MANUFACTURE FROM:	C	EA	1									20	57
	PAOZZ	4710-277-4613	TUBE, COPPER, 2 3/8 IN. ID, AS REQUIRED MILT24107 (96906)		FT		•	•	•	•	•	•			20	
N	PAOZZ		COUPLING, COMPRESSION 250-2IN (34749)	C	EA	3	•	•	•	•	•	•	•	•	20	58
N	XDOZZ		UNION, ELBOW: 90 DEG, 2 IN. 3634 (63686)	C	EA	2									20	59
	MOOZZ		TUBE, COPPER: 2 3/8 IN. ID 209-4510945-3 (80064) MANUFACTURE FROM:	C	EA	1									20	60
	PAOZZ	4710-277-4613	TUBE, COPPER, 2 3/8 IN. ID, AS REQUIRED MILT24107 (96906)		FT		•	•	•	•	•	•			20	
	XDOZZ		ELBOW, PIPE: 2 IN. ID, 90 DEG 3628 (63686)	C	EA	2									20	61
	PAOZZ	4730-908-6292	CLAMP, HOSE: 3 1/2 IN. MS35842-14 (96906)	C	EA	16	•	•	•	•	•	•	•	•	20	62
	MOOZZ		HOSE, FLEXIBLE: 2 3/8 IN. ID 209-4510945-1 (80064) MANUFACTURE FROM:	C	EA	4									20	63
	PCOFF	4720-235-4121	HOSE, FLEXIBLE, 2 3/8 IN. ID, 3 IN. OD, 6 IN. REQUIRED FOR EA HOSE ZZH428TYPE2GRADEACLASS1 (81348)		FT		•	•	•	•	•	•			20	
	MOOZZ		TUBE, COPPER: 2 3/8 IN. ID 209-4510945-3 (80064) MANUFACTURE FROM:	C	EA	1									20	64
	PAOZZ	4710-277-4613	TUBE, COPPER, 2 3/8 IN. ID, AS REQUIRED MILT24107 (96906)		FT		•	•	•	•	•	•			20	
	XDOZZ		ELBOW, TUBE: 2 IN., 45 DEG 3607-2IN (63686)		EA	2									20	65

	(1) SMR CODE	(2) FEDERAL STOCK NUMBER	(3) DESCRIPTION REF NUMBER & MFR CODE	USABLE ON CODE	(4) UNIT OF MEAS	(5) QTY INC IN UNIT	(6) 30-DAY DS MAINT ALLOWANCE (a) 1-20	(b) 21-50	(c) 51-100	(7) 30-DAY GS MAINT ALLOWANCE (a) 1-20	(b) 21-50	(c) 51-100	(8) 1-YR ALW PER 100 EQUIP CNTGY	(9) DEPOT MAINT ALW PER 100 EQUIP	(10) ILLUSTRATION (a) FIG. NO.	(b) ITEM NO.
	MOOZZ		TUBE, COPPER: 2 3/8 IN. ID 209-4510945-3 (80064) MANUFACTURE FROM:	C	EA	1									20	66
	PAOZZ	4710-277-4613	TUBE, BRASS, 2 3/8 IN. ID, AS REQUIRED MILT24107 (96906)		FT		•	•	•	•	•	•			20	
	XDOZZ		ELBOW, PIPE: 2 IN. ID, 90 DEG 3628 (63686)	C	EA	2									20	67
	MOOZZ		TUBE, COPPER: 2 3/8 IN. ID 209-4510945-3 (80064) MANUFACTURE FROM:	C	EA	1									20	68
	PAOZZ	4710-277-4613	TUBE, COPPER, 2 3/8 IN. ID, AS REQUIRED MILT24107 (96906)		FT		•	•	•	•	•	•			20	
	XDOZZ		ELBOW, PIPE: 2 IN. ID, 90 DEG 3628 (63686)	C	EA	2									20	69
	MOOZZ		TUBE, COPPER: 2 3/8 IN. ID 209-4510945-3 (80064) MANUFACTURE FROM:	C	EA	1									20	70
	PAOZZ	4710-277-4613	TUBE, COPPER, 2 3/8 IN. ID, AS REQUIRED MILT24107 (96906)		FT		•	•	•	•	•	•			20	
N	PAOZZ	4820-483-0682	VE, SWING CHECK: NO. 200, SILBRAZE, 2 IN. 4209S2IN (63686)	C	EA	2	•	•	•	•	•	•	•	•	20	71
	MOOZZ		TUBE, COPPER: 2 3/8 IN. ID 209-4510945-3 (80064) MANUFACTURE FROM:	C	EA	1									20	72
	PAOZZ	4710-277-4613	TUBE, COPPER, 2 3/8 IN. ID, AS REQUIRED MILT24107 (96906)		FT		•	•	•	•	•	•			20	
N	XDOZZ		COUPLING, SILBRAZE: 150 LBS, 2 IN. 3623 (63686)	C	EA	1									20	73
	MOOZZ		TUBE, COPPER: 2 3/8 IN. ID 209-4510945-3 (80064) MANUFACTURE FROM:	C	EA	1									20	74
	PAOZZ	4710-277-4613	TUBE, COPPER, 2 3/8 IN. ID, AS REQUIRED MILT24107 (96906)		FT		•	•	•	•	•	•			20	
	XDOZZ		COUPLING: 150 LBS, 2 IN., SILBRAZE 3623 (63686)	C	EA	1									20	75
	MOOZZ		TUBE, COPPER: 2 3/8 IN. ID 209-4510945-3 (80064) MANUFACTURE FROM:	C	EA	1									20	76
	PAOZZ	4710-277-4613	TUBE, COPPER, 2 3/8 IN. ID, AS REQUIRED MILT24107 (96906)		FT		•	•	•	•	•	•			20	
	PAOZZ		COUPLING, COMPRESSION 250-21N (34749)	C	EA	3	•	•	•	•	•	•	•	•	20	77
	XDOZZ		UNION, ELBOW: 90 DEG, 2 IN. 3634 (63686)	C	EA	2									20	78
	MOOZZ		TUBE, COPPER: 2 3/8 IN. ID 209-4510945-3 (80064) MANUFACTURE FROM:	C	EA	1									20	79
	PAOZZ	4710-277-4613	TUBE, COPPER, 2 3/8 IN. OD, AS REQUIRED MILT24107 (96906)		FT		•	•	•	•	•	•			20	
	XDOZZ		ELBOW, PIPE: 2 IN. ID, 90 DEG 3628 (63686)	C	EA	2									20	80
N	XDOZZ		CLAMP, STEEL, PIPE 212-21N (26403)	C	EA	4									20	

(1) SMR CODE	(2) FEDERAL STOCK NUMBER	(3) DESCRIPTION REF NUMBER & MFR CODE	USABLE ON CODE	(4) UNIT OF MEAS	(5) QTY INC IN UNIT	(6) 30-DAY DS MAINT ALLOWANCE (a) 1-20	(b) 21-50	(c) 51-100	(7) 30-DAY GS MAINT ALLOWANCE (a) 1-20	(b) 21-50	(c) 51-100	(8) 1-YR ALW PER 100 EQUIP CNTGY	(9) DEPOT MAINT ALW PER 100 EQUIP	(10) ILLUSTRATION (a) FIG. NO.	(b) ITEM NO.
A		GROUP 17 - SEA WATER PIPING													
PAOZZ	4730-908-3193	CLAMP, HOSE: 1 1/16 IN., 2 IN. MS35842-12 (96906)	A	EA	6	•	•	•	•	•	•	•	•	21	1
MOOZZ		HOSE, RUBBER: 1 5/16 IN. ID, 5 IN. LG 36W (24161) MANUFACTURE FROM:	A	EA	1									21	2
PCOZZ	4720-298-9910	HOSE, AS REQUIRED		FT		•	•	•	•	•	•			21	
PAOZZ		VALVE, GLOBE: BRONZE, 125 LBS, 1 IN. TUBE TO 1 IN. PIPE 1INIPSFX1INTUBE (14959)	A	EA	4	•	•	•	•	•	•	•	•	21	3
MOOZZ		HOSE, RUBBER: 1 5/8 IN. ID, 5 IN. LG 76W (24161) MANUFACTURE FROM:	A	EA	1									21	4
PCOZZ	4720-235-4127	HOSE, AS REQUIRED		FT		•	•	•	•	•	•			21	
PAOZZ	4730-909-8627	CLAMP, HOSE MS35842-13 (96906)	A	EA	2	•	•	•	•	•	•	•	•	21	5
MOOZZ		HOSE, RUBBER: 7/8 IN. ID, 5 IN. LG 76W (24161) MANUFACTURE FROM:	A	EA	1									21	6
PCOZZ	4720-230-6526	HOSE, AS REQUIRED		FT		•	•	•	•	•	•			21	
PAOZZ		COCK, DRAIN: 1/2 IN. IPS NO250-1-2 (14959)	A	EA	10	•	•	•	•	•	•	•	•	21	7
PAOZZ		VALVE, GLOBE: BRONZE, 125 LBS 3-8IPSFX3-8INTUBE (14959)	A	EA	1	•	•	•	•	•	•	•	•	21	8
PAOZZ	4730-908-6292	CLAMP, HOSE MS35842-14 (96906)	A	EA	2	•	•	•	•	•	•	•	•	21	9
MOOZZ		HOSE, RUBBER: 2 1/8 IN. ID 76W (24161) MANUFACTURE FROM:	A	EA	1									21	10
PCOZZ	4720-235-4122	HOSE, 5 IN. REQUIRED		FT		•	•	•	•	•	•			21	
XDOZZ		NUT, TUBE: 1/2 IN. MS39166-7 (96906)	A	EA	1									21	11
XDOZZ		ADAPTER: 1/2 IN. TUBE TO 3/8 IN. IPSN MS39158-7 (96906)	A	EA	1									21	12
PAOZZ	4730-908-6292	CLAMP, HOSE MS35842-14 (96906)	A	EA	2	•	•	•	•	•	•	•	•	21	13
MOOZZ		HOSE, RUBBER: 2 3/8 IN. ID 76W (24161) MANUFACTURE FROM:	A	EA	1									21	14
PCOZZ	4720-235-4121	HOSE, 5 IN. REQUIRED		FT		•	•	•	•	•	•			21	
MOOZZ		PACKING, HEMP: 1/4 IN. SQ MHC37F7 (98042) MANUFACTURE FROM:	A	EA	1									21	15
PCOZZ	5330-185-9656	PACKING, AS REQUIRED		EA		•	•	•	•	•	•			21	
MOOZZ		GASKET: NEOPRENE, 1/16 IN. THK MHC37F2 (98042) MANUFACTURE FROM:	A	EA	1									21	16
PCOZZ	5330-261-5760	GASKET, .062 IN. THK, 36 IN. WIDE, AS REQUIRED MHG156 (81349)		SH		•	•	•	•	•	•			21	
PAOZZ		VALVE, SEACOX: BRONZE, 2 IN. FIG1565-2IN (79577)	A	EA	2	•	•	•	•	•	•			21	17
XDOZZ		NUT, HEXAGON HEAD: BRASS, 5/16-18 NC 113780 (21450)	A	EA	16									21	18

(1) SMR CODE	(2) FEDERAL STOCK NUMBER	(3) DESCRIPTION REF NUMBER & MFR CODE	USABLE ON CODE	(4) UNIT OF MEAS	(5) QTY INC IN UNIT	(6) 30-DAY DS MAINT ALLOWANCE (a) 1-30	(b) 31-50	(c) 51-100	(7) 30-DAY GS MAINT ALLOWANCE (a) 1-30	(b) 31-50	(c) 51-100	(8) 1-YR ALW PER 100 EQUIP CNTGY	(9) DEPOT MAINT ALW PER 100 EQUIP	(10) ILLUSTRATION (a) FIG. NO.	(b) ITEM NO.
MOOZZ		TUBING, COPPER: TYPE K HARD, 1 1/2 IN., 30 5/8 IN. LG MANUFACTURE FROM:	A	EA	1									21	19
PAOZZ	4710-278-2221	TUBE, COPPER, 1 1/2 IN., .072 WALL, AS REQUIRED WWT799TYPEKFORM1 (81348)		FT		•	•	•	•	•	•			21	
XDOZZ		ELBOW: 90 DEG, STREET, 3/4 IN. TUBE W2334 (41947)	A	EA	4									21	20
XDOZZ		ADAPTER, HOSE: 1/2 IN. TUBE X 1/2 IN. HOSE MS27053-8 (96906)	A	EA	4									21	21
XDOZZ		COUPLING, W/STOP: 1 1/2 X 1 1/2 IN. A3929 (49147)	A	EA	4									21	22
XDOZZ		FLANGE, PUMP MMC37F14 (98042)	A	EA	4									21	23
MOOZZ		GASKET: RAW WATER PUMP FLANGE MMC37F16 (98042) MANUFACTURE FROM:	A	EA	1									21	24
PCOZZ	5330-261-5760	GASKET, .062 IN. THK, 36 IN. WIDE AS REQUIRED MMG156 (81349)		SH		•	•	•	•	•	•			21	
XDOZZ		ELBOW, TUBE: 90 DEG, 1 1/2 IN. W2085 (41947)	A	EA	12									21	25
XDOZZ		TEE, REDUCING, TUBE: 2 X 1 1/2 X 1 1/2 IN. W40110 (41947)	A	EA	2									21	26
XDOZZ		ELBOW, TUBE: 2 IN., 90 DEG W2086 (41947)	A	EA	2									21	27
XDOZZ		TEE, REDUCING, TUBE: 2 X 2 X 1/2 IN. IPS A1712 (41947)	A	EA	4									21	28
MOOZZ		TUBING, COPPER: TYPE K HARD, 2 IN., 20 3/8 IN. LG MANUFACTURE FROM:	A	EA	1									21	29
PAOZZ	4710-278-2222	TUBE, COPPER, 2 IN., .083 WALL, AS REQUIRED WWT799TYPEKCLASS2 (81348)		FT		•	•	•	•	•	•			21	
PAOZZ #	5307-416-4024	STUD, BRASS: 5/16-18 NC, 1 1/2 IN. LG 5167325 (24617)	A	EA	16	•	•	•	•	•	•	•	•	21	30
XDOZZ		ADAPTER: 2 IN. IPSM X 2 IN. TUBE W1187 (41947)	A	EA	2									21	31
XDOZZ		TEE, REDUCING, SCREWED: 2 X 1 1/2 X 2 IN. IPS WWP501TYPE1CLASSA (81348)	A	EA	4									21	32
MOOZZ		PIPE, BRASS: 2 IN., 40 5/8 IN. LG MANUFACTURE FROM:	A	EA	1									21	33
PAOZZ	4710-289-2854	PIPE, BRASS, 2 IN., .156 WALL, AS REQUIRED WWP351CLASS1 (81348)		FT		•	•	•	•	•	•			21	
PAOZZ		COCK, PET, BRONZE: W/8S WRENCH 254-21NW8S (14959)	A	EA	2	•	•	•	•	•	•	•	•	21	34
PAOZZ		VALVE, HOSE: W/CAP AND CHAIN, 1 1/2 IPS X 1 1/2 IN. HOSE 117-1-1-2 (14959)	A	EA	2	•	•	•	•	•	•	•	•	21	35
XDOZZ		NIPPLE, CLOSE, BRASS: 1 1/2 IN. IPS WWN351TYPE1 (81348)	A	EA	2									21	36

(1) SMR CODE	(2) FEDERAL STOCK NUMBER	(3) DESCRIPTION REF NUMBER & MFR CODE	USABLE ON CODE	(4) UNIT OF MEAS	(5) QTY INC IN UNIT	(6) 30-DAY DS MAINT ALLOWANCE (a) 1-20	(b) 21-50	(c) 51-100	(7) 30-DAY GS MAINT ALLOWANCE (a) 1-20	(b) 21-50	(c) 51-100	(8) 1-YR ALW PER 100 EQUIP CNTGY	(9) DEPOT MAINT ALW PER 100 EQUIP	(10) ILLUSTRATION (a) FIG. NO.	(b) ITEM NO.
MOOZZ		NIPPLE, LONG: SCHEDULE 40, 2 1/2 IPS X 2 1/2 IN. LG, BRASS 184703AP3 (98042) MANUFACTURE FROM:	A	EA	2									21	37
PAOZZ	4710-278-8772	PIPE, BRASS, 2 1/2 IN., AS REQUIRED WWP351CLASS1 (81348)		FT		•	•	•	•	•	•			21	
XDOZZ		CAP, PIPE: 150 LBS, SCREWED, 2 1/2 IN. IPS WWP521TYPE1 (81348)	A	EA	2									21	38
PAOZZ	4730-187-4227	PLUG, SQUARE HEAD: 1/2 IN., BRASS WWP471ATYPE1CLASS1 (81348)	A	EA	2	•	•	•	•	•	•	•	•	21	39
XDOZZ		CONNECTOR, W/FLANGE: 2 IN. NPT X 2 IN. TUBE W1287 (41947)	A	EA	2									21	40
MOOZZ		TUBING, COPPER: TYPE K SOFT, 3/8 IN., 30 3/8 IN. LG MANUFACTURE FROM:	A	EA	1									21	41
PAOZZ	4710-277-5528	TUBE, COPPER, 3/8 IN., TYPE K SOFT WWT755 (81348)		FT		•	•	•	•	•	•			21	
XDOZZ		FLANGE, PUMP MMC37F15 (98042)	A	EA	4									21	42
XDOZZ		COUPLING, W/STOP: 1 1/2 X 1/2 IN. TUBE W1069 (41947)	A	EA	4									21	43
XDOZZ		ADAPTER, MALE: IPS, 1/2 TUBE X 3/8 IN. IPSM A1479 (41947)	A	EA	1									21	44
XDOZZ		TEE, REDUCING, TUBE: 1 1/2 X 1 1/2 X 1/2 IN. W9088 (41947)	A	EA	2									21	45
MOOZZ		TUBING, COPPER: TYPE K HARD, 1 IN., 15 3/8 IN. LG MANUFACTURE FROM:	A	EA	1									21	46
PAOZZ	4710-988-0643	TUBE, COPPER, 1 IN., .065 WALL, AS REQUIRED WWT799TYPEK (81348)		FT		•	•	•	•	•	•			21	
XDOZZ		TEE, REDUCING, TUBE: 1 1/2 X 1 X 3/4 IN. W4058 (41947)	A	EA	4									21	47
MOOZZ		NIPPLE, BRASS: SCHEDULE 40, 1 IN. IPS X 8 IN. LG MANUFACTURE FROM:	A	EA	4									21	48
PAOZZ	4730-277-7739	PIPE, BRASS, 1 IN., AS REQUIRED WWP351GRADEASTD (81348)		FT		•	•	•	•	•	•			21	
MOOZZ		NIPPLE: THREAD ONE END, SCHEDULE 40, 1 IN. IPS MANUFACTURE FROM:	A	EA	4									21	49
PAOZZ	4730-277-7739	PIPE, BRASS, 1 IN., AS REQUIRED WWP351GRADEASTD (81348)		FT		•	•	•	•	•	•			21	
MOOZZ		TUBING, COPPER: TYPE K HARD, 3/4 IN., 15 3/8 IN. LG MANUFACTURE FROM:	A	EA	1									21	50
PAOZZ	4710-278-2218	TUBE, COPPER, 3/4 IN., .065 WALL WWT799TYPEKCLASS2 (81348)		FT		•	•	•	•	•	•			21	
XDOZZ		ELBOW: 90 DEG, 3/4 TUBE X 3/4 IN. IPSF A1532 (41947)	A	EA	4									21	51
XDOZZ		NIPPLE, CLOSE, BRASS: 3/4 IN. IPS WWN351TYPE2 (81348)	A	EA	4									21	52
XDOZZ		ELBOW: 90 DEG, 3/4 IN. TUBE W2038 (41947)	A	EA	4									21	53

(1) SMR CODE	(2) FEDERAL STOCK NUMBER	(3) DESCRIPTION REF NUMBER & MFR CODE	USABLE ON CODE	(4) UNIT OF MEAS	(5) QTY INC IN UNIT	(6) 30-DAY DS MAINT ALLOWANCE (a) 1-20	(b) 21-50	(c) 51-100	(7) 30-DAY GS MAINT ALLOWANCE (a) 1-20	(b) 21-50	(c) 51-100	(8) 1-YR ALW PER 100 EQUIP CNTGY	(9) DEPOT MAINT ALW PER 100 EQUIP	(10) ILLUSTRATION (a) FIG. NO.	(b) ITEM NO.
XDOZZ		ADAPTER, MALE: IPS, 1/2 IN. TUBE X 1/2 IN. IPSM A1517 (49147)	A	EA	1									21	54
PAOZZ	4820-878-3556	VALVE, GLOBE: 3/8 IN. TUBE M15126 (41947)	A	EA	1	•	•	•	•	•	•	•	•	21	55
MOOZZ		TUBING, COPPER: TYPE K SOFT, 1/2 IN., 20 3/8 IN. LG MANUFACTURE FROM:	A	EA	1									21	56
PAOZZ	4710-833-9408	TUBE, COPPER, 1/2 IN., TYPE K WWT799CLASS1 (81348)		FT		•	•	•	•	•	•			21	
XDOZZ		NUT, TUBE: 3/8 IN. 1611-6 (79470)	A	EA	1									21	57
XDOZZ		CONNECTOR, MALE: 3/8 IN. TUBE X 1/2 IN. IPSM 48X6X8 (41947)	A	EA	1									21	58
PAOZZ		VALVE, GLOBE: 45 DEG FLARE, 3/8 IN. TUBE 113-1-3-8IN (14959)	A	EA	2	•	•	•	•	•	•	•	•	21	59
XDOZZ		CONNECTOR, MALE: 1/2 IN. TUBE X 1/2 IN. IPSM 48X8X8 (79470)	A	EA	2									21	60
PAOZZ	4730-254-6241	TEE: 125 LBS, SCREWED, 1/2 IN. IPS, BRONZE WWP460CLASSA (81348)	A	EA	1	•	•	•	•	•	•	•	•	21	61
PAOZZ		VALVE, GLOBE: BRONZE, 125 LBS, ANGLE 13113-8IN (14959)	A	EA	2	•	•	•	•	•	•	•	•	21	
PAOZZ		VALVE, GATE 451 (14959)	A	EA	2	•	•	•	•	•	•	•	•	21	
XDOZZ		ADAPTER, STRAIGHT: MALE, 3/4 IN. TUBE X 3/4 IN. IPSM 48X8A (79470)	A	EA	1									21	
XDOZZ		NUT: 5/8 IN. TUBE SIZE 1110X10 (79470)	A	EA	1									21	
XDOZZ		ADAPTER, STRAIGHT: 5/8 TUBE X 1/2 IN. IPSF 48X10 (79470)	A	EA	1									21	
PAOZZ	4730-908-3193	CLAMP, HOSE: 1 1/4 IN. OD MS35842-12 (96906)	B	EA	6	•	•	•	•	•	•	•	•	22	1
MOOZZ		HOSE, FLEXIBLE: 7/8 IN. ID 358 (24161) MANUFACTURE FROM:	B	EA	1									22	2
PCOZZ	4720-230-6526	HOSE, 5 1/4 IN. REQUIRED ZZH428TYPE1CLASS2GRADEA (81348)		FT		•	•	•	•	•	•			22	
MOOZZ		HOSE, FLEXIBLE: 7/8 IN. ID 4175EC (24161) MANUFACTURE FROM:	B	EA	1									22	3
PCOZZ	4720-230-6526	HOSE, 7/8 IN. ID X 24 IN. LG ZZH428TYPE1CLASS2GRADEA (81348)		FT		•	•	•	•	•	•			22	
MOOZZ		HOSE, FLEXIBLE: 1 5/16 IN. ID 35W (24161) MANUFACTURE FROM:	B	EA	1									22	4
PCOZZ	4720-288-9910	HOSE, 4 IN. REQUIRED ZZH428TYPE2CLASS1GRADEB (81348)		FT		•	•	•	•	•	•			22	
PAOZZ	4730-908-3193	CLAMP, HOSE: 1 1/4 IN. OD MS35842-12 (96906)	B	EA	2	•	•	•	•	•	•	•	•	22	5
MOOZZ		HOSE, FLEXIBLE: 1 IN. ID, 1 7/16 IN. OD 358 (24161) MANUFACTURE FROM:	B	EA	1									22	6
PCOZZ	4720-555-8015	HOSE, 4 IN. REQUIRED ZZH428TYPE1CLASS1GRADEA (81348)		FT		•	•	•	•	•	•			22	

(1) SMR CODE	(2) FEDERAL STOCK NUMBER	(3) DESCRIPTION REF NUMBER & MFR CODE	USABLE ON CODE	(4) UNIT OF MEAS	(5) QTY INC IN UNIT	(6) 30-DAY DS MAINT ALLOWANCE (a) 1-20	(b) 21-50	(c) 51-100	(7) 30-DAY GS MAINT ALLOWANCE (a) 1-20	(b) 21-50	(c) 51-100	(8) 1-YR ALW PER 100 EQUIP CNTGY	(9) DEPOT MAINT ALW PER 100 EQUIP	(10) ILLUSTRATION (a) FIG. NO.	(b) ITEM NO.
PAOZZ	4730-908-6292	CLAMP, HOSE: 3 1/16 IN. OD MS35842-14 (96906)	B	EA	4	*	*	*	*	*	*	*	*	22	7
MOOZZ		HOSE, FLEXIBLE: 2 3/8 IN. ID 35W (24161) MANUFACTURE FROM:	B	EA	1									22	8
PAOZZ	4720-235-4121	HOSE, 4 IN. REQUIRED ZZH428CLASS2TYPE3GRADEB (81348)		FT		*	*	*	*	*	*			22	
MOOZZ		GASKET: FLANGE, NEOPRENE 15F22-209 (26571) MANUFACTURE FROM:	B	EA	1									22	9
PCOZZ	5330-261-5760	GASKET, AS REQUIRED HHG156 (81348)		YD		*	*	*	*	*	*			22	
PAOZZ	4820-554-8391	COCK, DRAIN: 1/2 IN. MS35785-4 (96906)	B	EA	1	*	*	*	*	*	*	*	*	22	10
MOOZZ		GASKET: NEOPRENE, 1/16 IN. THK 1HF2-209 (26571) MANUFACTURE FROM:	B	EA	1									22	11
PCOZZ	5330-261-5760	GASKET, AS REQUIRED HHG156 (81348)		YD		*	*	*	*	*	*			22	
PAOZZ		PLUG COCK, FLANGED: 2 IN. IPS, BRONZE 959-2IN (94026)	B	EA	2	*	*	*	*	*	*	*	*	22	12
MOOZZ		PIPE, BRASS: 2 IN. IPS GUN39P1 (26571) MANUFACTURE FROM:	B	FT	24									22	13
PAOZZ	4710-289-2854	PIPE, BRASS, 2 IN., AS REQUIRED WWP351TYPE1 (81348)		FT		*	*	*	*	*	*			22	
XDOZZ		FLANGE: NO. 150, SCREWED, 2 IN., BRONZE 3486-2IN (63686)	B	EA	2									22	14
MOOZZ		TUBING, COPPER: 1/2 IN., .065 WALL GUN39P9 (26571) MANUFACTURE FROM:	B	FT	18									22	15
PAOZZ	4710-684-3565	TUBING, COPPER, .625 IN. OD, .042 WALL AS REQUIRED WWT799CLASS1 (81348)		FT		*	*	*	*	*	*			22	
PAOZZ		VALVE, GLOBE: 1 IN. IPS, BRONZE 245WS1IN (94026)	B	EA	4	*	*	*	*	*	*	*	*	22	16
XDOZZ		TEE: 2 IN. SCREWED, BRONZE 3411-2IN (63686)	B	EA	6									22	17
XDOZZ		ELBOW: 90 DEG, 2 IN. SCREWED, BRONZE 3405-2IN (63686)	B	EA	4									22	18
PAOZZ	4710-277-7736	PIPE, BRASS: 1/2 IN. WWP351CLASS1 (81348) (AS REQUIRED)	B	FT		*	*	*	*	*	*	*	*	22	19
XDOZZ		TEE, REDUCING, TUBE: 1 1/2 X 1 1/2 X 1/2 IN., BRONZE A1639 (81947)	B	EA	2									22	
XDOZZ		ELBOW, UNION: 90 DEG, 2 IN. TUBE, BRONZE A11457 (81947)	B	EA	2									22	20
XDOZZ		FLANGE: 150 LBS, 1 IN. TUBE 3674-1IN (63686)	B	EA	4									22	21
XDOZZ		ADAPTER: 3/4 IN. IPSM, 3/4 IN. TUBE, BRONZE A152[illegible] (81947)	B	EA	4									22	22

(1) SMR CODE	(2) FEDERAL STOCK NUMBER	(3) DESCRIPTION REF NUMBER & MFR CODE	USABLE ON CODE	(4) UNIT OF MEAS	(5) QTY INC IN UNIT	(6) 30-DAY DS MAINT ALLOWANCE (a) 1-20	(b) 21-50	(c) 51-100	(7) 30-DAY GS MAINT ALLOWANCE (a) 1-20	(b) 21-50	(c) 51-100	(8) 1-YR ALW PER 100 EQUIP CNTGY	(9) DEPOT MAINT ALW PER 100 EQUIP	(10) ILLUSTRATION (a) FIG. NO.	(b) ITEM NO.
MOOZZ		TUBING, COPPER: 1 IN., .065 WALL GUN39P7 (26571) MANUFACTURE FROM:	B	FT	18									22	23
PAOZZ	4710-278-2219	TUBING, COPPER, 1.125 OD, AS REQUIRED WWT799TYPEX (81348)		FT		•	•	•	•	•	•			22	
XDOZZ		REDUCER, TUBE: 1 IN. TO 3/4 IN., BRONZE W1049 (81947)	B	EA	4									22	24
XDOZZ		ELBOW: 90 DEG, TUBE, 3/4 IN. A1530 (81947)	B	EA	4									22	25
MOOZZ		TUBING, COPPER: 3/4 IN., .065 WALL GUN39P10 (26571) MANUFACTURE FROM:	B	FT	8									22	26
PAOZZ	4710-289-5945	TUBING, COPPER, .875 OD, .065 WALL, AS REQUIRED WWT799CLASS1 (81348)		FT		•	•	•	•	•	•			22	
XDOZZ		TEE, REDUCING, TUBE: 1 1/2 X 1 X 1 IN., BRONZE A1633 (81947)	B	EA	4									22	27
MOOZZ		TUBING, COPPER: 1 1/2 IN., .065 WALL GUN39P5 (26571) MANUFACTURE FROM:	B	FT	35									22	28
PAOZZ	4710-640-1100	TUBING, COPPER, 1.625 OD, .060 WALL, AS REQUIRED WWT799CLASS1 (81348)		FT		•	•	•	•	•	•			22	
XDOZZ		ELBOW: 90 DEG, TUBE, 1 1/2 IN., BRONZE A1629 (81947)	B	EA	8									22	29
XDOZZ		ELBOW, REDUCING: 90 DEG, TUBE, 1 1/2 IN. TO 1 IN. A2663 (81947)	B	EA	6									22	30
XDOZZ		ELBOW: 90 DEG, TUBE, 2 IN., BRONZE A1277 (81947)	B	EA	8									22	31
MOOZZ		TUBING, COPPER: 2 IN. GUN39P4 (26571) MANUFACTURE FROM:	B	FT	24									22	32
PAOZZ	4710-640-1104	TUBING, COPPER, 2.125 OD, .070 WALL, AS REQUIRED WWT799A (81348)		FT		•	•	•	•	•	•			22	
MOOZZ		TUBE, COPPER: 1/2 X 2 1/2 IN. LG GUN39F39 (26571) MANUFACTURE FROM:	B	EA	4									22	33
PAOZZ	4710-684-3565	TUBE, COPPER, .625 OD, .042 WALL, AS REQUIRED WWT799CLASS1 (81348)		FT		•	•	•	•	•	•			22	
XDOZZ		TEE, REDUCING, TUBE: 2 X 1 1/2 X 1 IN., BRONZE A1687 (81947)	B	EA	2									22	34
MOOZZ		TUBE, COPPER, 1/2 IN., 5 IN. LG GUN39F38 (26571) MANUFACTURE FROM:	B	EA	4									22	35
PAOZZ	4710-684-3565	TUBE, COPPER, .625 OD, .042 WALL, AS REQUIRED WWT799CLASS1 (81348)		FT		•	•	•	•	•	•			22	
XDOZZ		BUSHING, REDUCING, TUBE: 1 X 1/2 IN., BRONZE W1739 (81947)	B	EA	8									22	36
XDOZZ		ELBOW, STREET: 90 DEG, 1/2 IN. SCREWED, BRONZE 3409-1-21N (63686)	B	EA	6										

	(1) SMR CODE	(2) FEDERAL STOCK NUMBER	(3) DESCRIPTION REF NUMBER & MFR CODE	USABLE ON CODE	(4) UNIT OF MEAS	(5) QTY INC IN UNIT	(6) 30-DAY DS MAINT ALLOWANCE (a) 1-20	(b) 21-50	(c) 51-100	(7) 30-DAY GS MAINT ALLOWANCE (a) 1-20	(b) 21-50	(c) 51-100	(8) 1-YR ALW PER 100 EQUIP CNTGY	(9) DEPOT MAINT ALW PER 100 EQUIP	(10) ILLUSTRATION (a) FIG. NO.	(b) ITEM NO.
N	PAOZZ	4730-908-3194	HOSE, CLAMP: 1 1/4 IN. MS35842-11 (96906)	C	EA	16	*	*	*	*	*	*	*	*	23	1
N	MOOZZ		HOSE, FLEXIBLE: 1 5/16 IN. ID X 4 IN. LG 35W (24161) MANUFACTURE FROM:	C	EA	4									23	2
N	PCOZZ	4720-288-9910	HOSE, RUBBER, 1 5/16 IN. ID, 4 IN. REQUIRED FOR EA HOSE ZZH428TYPE2GRADEBCLASS10R2 (81348)		FT		*	*	*	*	*	*			23	
N	MOOZZ		PIPE, COPPER: 1 IN. IPS 245-4510946P7 (80064) MANUFACTURE FROM:	C	EA	1									23	3
N	PAOZZ	4710-277-6069	PIPE, COPPER, 1 IN. IPS, 14 FT REQUIRED WWP377 (81348)		FT		*	*	*	*	*	*			23	
N	PAOZZ		GLOBE, VALVE, STEEL 245PNS11N (63686)	C	EA	4	*	*	*	*	*	*	*	*	23	4
N	PAOZZ	4730-908-3193	CLAMP, HOSE: 2 IN. MS35842-12 (96906)	C	EA	16	*	*	*	*	*	*	*	*	23	5
N	MOOZZ		HOSE, FLEXIBLE: 1 IN. ID X 4 IN. LG 35B (24161) MANUFACTURE FROM:	C	EA	4									23	6
N	PCOZZ	4720-288-7996	HOSE, RUBBER, 1 IN. ID, 4 IN. REQUIRED FOR EA HOSE ZZH428TYPE1GRADEACLASS2 (81348)		FT		*	*	*	*	*	*			23	
N	MOOZZ		PIPE, COPPER: 3/4 IN. IPS 245-4510946P10 (80064) MANUFACTURE FROM:	C	EA	1									23	7
N	PAOZZ	4710-277-6068	PIPE, COPPER, 3/4 IN. IPS, 7 FT REQUIRED WWP377 (81348)		FT		*	*	*	*	*	*			23	
N	XDOZZ		UNION, ELBOW: 3/4-14 THD SIZE, 90 DEG 3732-3-4IN (63686)	C	EA	4									23	8
N	XDOZZ		ELBOW: 3/4 IN. IPS, 90 DEG, BRONZE 3605-3-4 (63686)	C	EA	4									23	9
N	XDOZZ		TEE, REDUCING: 1 1/2 X 1 X 1 IN. IPS 3610-1-1-2X1X1IN (63686)	C	EA	4									23	10
N	MOOZZ		PIPE, COPPER: 1 1/2 IN. IPS 245-4510946P5 (80064) MANUFACTURE FROM:	C	EA	1									23	11
N	PAOZZ	4710-277-6127	PIPE, COPPER, 1 1/2 IN. IPS, 4 FT REQUIRED WWP377 (81348)		FT		*	*	*	*	*	*			23	
N	XDOZZ		ELBOW: BRONZE, 1 1/2 IN., 90 DEG 3605-1-1-2IN (63686)	C	EA	8									23	12
N	XDOZZ		ELBOW: BRONZE, 1 1/2 IN., 45 DEG 3654 (63686)	C	EA	2									23	13
N	PAOZZ	4730-908-3194	CLAMP, HOSE: 1 1/4 IN. MS35842-11 (96906)	C	EA	40	*	*	*	*	*	*	*	*	23	14
N	MOOZZ		HOSE, FLEXIBLE: 7/8 ID X 5 1/4 IN. LG 70W (24161) MANUFACTURE FROM:	C	EA	5									23	15
N	PCOZZ	4720-230-6526	HOSE, FLEXIBLE, 7/8 IN. ID, 5 1/4 IN. REQUIRED ZZH428TYPE1GRADEBCLASS2 (81348)		FT		*	*	*	*	*	*			23	
N	MOOZZ		PIPE, COPPER: 1/2 IN. IPS 245-4510946P9 (80064) MANUFACTURE FROM:	C	EA	1									23	16
N	PAOZZ	4710-277-6101	PIPE, COPPER, 1/2 IN. IPS, 30 FT REQUIRED WWP377 (81348)		FT		*	*	*	*	*	*			23	

	(1) SMR CODE	(2) FEDERAL STOCK NUMBER	(3) DESCRIPTION REF NUMBER & MFR CODE	USABLE ON CODE	(4) UNIT OF MEAS	(5) QTY INC IN UNIT	(6) 30-DAY DS MAINT ALLOWANCE (a) 1-20	(b) 21-50	(c) 51-100	(7) 30-DAY GS MAINT ALLOWANCE (a) 1-20	(b) 21-50	(c) 51-100	(8) 1-YR ALW PER 100 EQUIP CNTGY	(9) DEPOT MAINT ALW PER 100 EQUIP	(10) ILLUSTRATION (a) FIG. NO.	(b) ITEM NO.
N	PAOZZ		GLOBE, VALVE: BRONZE, 1/2 IN. 245A451-2IN (63686)	C	EA	3	*	*	*	*	*	*	*	*	23	17
N	MOOZZ		PIPE, COPPER: 1 1/2 X 2 3/4 IN. LG 245-4510946F60 (80064) MANUFACTURE FROM:	C	EA	8									23	18
N	PAOZZ	4710-277-6127	PIPE, COPPER, 1 1/2 IN. ID, AS REQUIRED WWP377 (81348)		FT		*	*	*	*	*	*			23	
N	XDOZZ		TEE, BRONZE, REDUCING: 1 1/2 X 1 1/2 X 1/2 IN. 3610-1-1-2X1-1-2X1-2 (63686)	C	EA	3									23	19
N	MOOZZ		PIPE, COPPER: 1 1/2 IN. ID X 4 1/2 IN. LG 245-4510946F53 (80064) MANUFACTURE FROM:	C	EA	8									23	20
N	PAOZZ	4710-277-6127	PIPE, COPPER, 1 1/2 IN., AS REQUIRED WWP377 (81348)	C	FT		*	*	*	*	*	*			23	
N	PAOZZ	4730-903-1341	CLAMP, HOSE QQS766 (81348)	C	EA	32	*	*	*	*	*	*			23	21
N	MOOZZ		HOSE, RUBBER: 1 7/8 IN. ID X 5 IN. LG 245-4510946F57 (80064) MANUFACTURE FROM:	C	EA	4									23	22
N	POOZZ	4720-235-4126	HOSE, FLEXIBLE, 1 7/8 IN. ID, AS REQUIRED ZZH428TYPE2GRADEBCLASS1 (81348)		FT		*	*	*	*	*	*			23	
N	MOOZZ		PIPE, COPPER: 1 1/2 X 3 IN. LG 245-4510946F52 (80064) MANUFACTURE FROM:	C	EA	8									23	23
N	PAOZZ	4710-277-6127	PIPE, COPPER, 1 1/2 IN., AS REQUIRED WWP377 (81348)		FT		*	*	*	*	*	*			23	
N	MOOZZ		HOSE, RUBBER: 1 7/8 IN. ID X 6 IN. LG 75W (24161) MANUFACTURE FROM:	C	EA	4									23	24
N	POOZZ	4720-235-4126	HOSE, FLEXIBLE, 1 7/8 IN. ID, AS REQUIRED ZZH428TYPE2GRADEBCLASS1 (81348)		FT		*	*	*	*	*	*			23	
N	XDOZZ		TEE, BRONZE: 2 X 1 1/2 X 1 1/2 IN., SILBRAZE A1689 (81947)	C	EA	2									23	25
N	PAOZZ	4730-908-6292	CLAMP, HOSE: 3 1/16 IN. MS35842-14 (96906)	C	EA	24	*	*	*	*	*	*	*	*	23	26
N	MOOZZ		HOSE, FLEXIBLE: 2 3/8 IN. ID X 4 IN. LG 35W (24161) MANUFACTURE FROM:	C	EA	6									23	27
N	POOZZ	4720-235-4121	HOSE, FLEXIBLE, 2 3/8 IN. ID, 4 IN. REQUIRED ZZH428TYPE2GRADEBCLASS1 (81348)		FT		*	*	*	*	*	*			23	
N	MOOZZ		TUBE, BRASS: 1 IN. IPS 245-4510946P4 (80064) MANUFACTURE FROM:	C	EA	1									23	28
N	PAOZZ	4710-004-2297	TUBE, BRASS, 2 IN. IPS, 12 FT REQUIRED WWT791GRADE3TYPE8 (81348)		FT		*	*	*	*	*	*			23	
N	XDOZZ		ELBOW, SILBRAZE: 2 IN. WWP460CLASS8 (81348)	C	EA	5									23	29
	PAOZZ	5310-989-5956	NUT, PLAIN, HEXAGON: U-BOLT, BRASS, 3/8-16 THD SIZE MS35691-19 (96906)	C	EA	12	*	*	*	*	*	*	*	*	23	30
N	PAOZZ	5306-003-0684	U-BOLT: 3/8 DIA X 2 IN. 137-3-8X2IN (26403)	C	EA	6	*	*	*	*	*	*	*	*	23	31

(1)	(2)	(3)		(4)	(5)	(6) 30-DAY DS MAINT ALLOWANCE			(7) 30-DAY GS MAINT ALLOWANCE			(8)	(9)	(10) ILLUSTRATION	
						(a)	(b)	(c)	(a)	(b)	(c)			(a)	(b)
SMR CODE	FEDERAL STOCK NUMBER	DESCRIPTION REF NUMBER & MFR CODE	USABLE ON CODE	UNIT OF MEAS	QTY INC IN UNIT	1-20	21-50	51-100	1-20	21-50	51-100	1-YR ALW PER 100 EQUIP CATGY	DEPOT MAINT ALW PER 100 EQUIP	FIG. NO.	ITEM NO.
N PAOZZ	4820-554-8391	COCK, DRAIN: BRONZE, 1/2 IN. 1121 (48422)	C	EA	2	•	•	•	•	•	•	•	•	23	32
N XDOZZ		TEE, REDUCING: IPS 3411-2X1-2X2IN (63686)	C	EA	2									23	33
N MOOZZ		PIPE, BRASS: 2 IN. IPS 245-4510946P1 (80064) MANUFACTURE FROM:	C	EA	1									23	34
N PAOZZ	4710-289-2854	PIPE, BRASS, 2 IN. IPS, SCHEDULE 40, 10 FT REQUIRED WWP351CLASS1 (81348)		FT		•	•	•	•	•	•			23	
N XDOZZ		ELBOW: 2 IN. IPS, 45 DEG WWP460CLASSA (81348)	C	EA	12									23	35
N PAOZZ	4730-222-1844	NIPPLE, CLOSE: 2 IN. WWN351TYPE1 (81348)	C	EA	12	•	•	•	•	•	•	•	•	23	36
N PAOZZ	4820-005-4893	COCK, PLUG: 2 IN. IPS 948-2IN (48422)	C	EA	2	•	•	•	•	•	•	•	•	23	37
N PAOZZ	5310-768-0318	NUT, PLAIN, HEXAGON: FLANGE, 1/2-13 THD SIZE MS51967-14 (96906)	C	EA	16	•	•	•	•	•	•	•	•	23	38
N XDOZZ		FLANGE: 1 IN. IPS, 150 LBS, F-F, SILBRAZE 3674 (63686)	C	EA	4									23	39
N MOOZZ		GASKET, NEOPRENE: 1/16 IN. THK 245-4510946F22 (80064) MANUFACTURE FROM:	C	EA	4									23	40
N PCOZZ	5330-290-7911	GASKET, NEOPRENE, 1/16 IN. THK, 50 DUR, AS REQUIRED HHG156 (81348)		SH		•	•	•	•	•	•			23	
N PAOZZ	5307-741-1745	STUD, COLD STEEL: 1/2 IN. NC X 1 1/2 IN. LG 7411745 (19207)	C	EA	16	•	•	•	•	•	•	•	•	23	41
N XDOZZ		ELBOW, SILBRAZE: 1/2 IN., 90 DEG 3651 (63686)	C	EA	3									23	42
N MOOZZ		PIPE, BRASS: 1/2 IN. IPS 245-4510946P14 (80064) MANUFACTURE FROM:	C	EA	1									23	43
N PAOZZ	4710-289-2851	PIPE, BRASS, 1/2 IN. IPS, 2 FT REQUIRED WWP351CLASS1 (81348)		FT		•	•	•	•	•	•			23	
N PAOZZ	5305-269-3214	SCREW, CAP, HEXAGON HEAD: PLATE MTG, 3/8-16 THD SIZE, 1/2 IN. LG MS90725-64 (96906)	C	EA	32	•	•	•	•	•	•	•	•	23	44
N XDOZZ		PLATE, BRASS: 3/4 X 4 X 4 IN. 245-4510946F42 (80064)	C	EA	8									23	45
N MOOZZ		GASKET, NEOPRENE: 1/16 IN. THK 245-4510946F9 (80064) MANUFACTURE FROM:	C	EA	8									23	46
N PCOZZ	5330-290-7911	GASKET, NEOPRENE, 1/16 IN. THK, 50 DUR, AS REQUIRED HHG156 (81348)		SH		•	•	•	•	•	•			23	
N XDOZZ		REDUCER: 1 IN. TO 3/4 IN., SILBRAZE 3638-1X3-4IN (63686)	C	EA	4									23	
N XDOZZ		NIPPLE, LONG: 2 IN. IPS WWN351TYPE1 (81348)	C	EA	2									23	

	(1) SMR CODE	(2) FEDERAL STOCK NUMBER	(3) DESCRIPTION REF NUMBER & MFR CODE	USABLE ON CODE	(4) UNIT OF MEAS	(5) QTY INC IN UNIT	(6) 30-DAY DS MAINT ALLOWANCE (a) 1-20	(b) 21-50	(c) 51-100	(7) 30-DAY GS MAINT ALLOWANCE (a) 1-20	(b) 21-50	(c) 51-100	(8) 1-YR ALW PER 100 EQUIP CNTGY	(9) DEPOT MAINT ALW PER 100 EQUIP	(10) ILLUSTRATION (a) FIG. NO.	(b) ITEM NO.
N	MOOZZ		ANGLE, IRON, L: 1 1/2 X 1 1/2 X 3/16 X 4 IN. LG 245-4510946F33 (80064) MANUFACTURE FROM:	C	EA	6									23	
N	PAOZZ	9520-596-1843	ANGLE, IRON, L, 1 1/2 X 1 1/2 X 3/16 IN., AS REQUIRED QQS741 (81348)		FT		•	•	•	•	•	•			23	
N	PAOZZ	4730-975-1879	CLAMP, EXTENSION: SPLIT PIPE 138-1IN (26403)	C	EA	4	•	•	•	•	•	•	•	•	23	
			CLAMP, EXTENSION: 1 1/2 IN., SPLIT PIPE 138-1-1-2IN (26403)	C	EA	4	•	•	•	•	•	•	•	•	23	
N	MOOZZ		PIPE, GALVANIZED: 1/4 IN. 245-4510946F45 (80064) MANUFACTURE FROM:	C	EA	1									23	
N	PAOZZ	4710-277-5475	PIPE, GALVINIZED, 1/4 IN., SCHEDULE 40, AS REQUIRED WWP404GRADEA (81348)		FT		•	•	•	•	•	•			23	
			GROUP 18 - MUFFLER AND EXHAUST PIPING													
	PAOZZ	4730-908-6294	CLAMP, HOSE: MUFFLER MS35842-16 (96906)	AB	EA	8	•	•	•	•	•	•	•	•	24	1
	PCOZZ		HOSE, FLEXIBLE: 5 1/2 IN. ID MR3000-44-24 (16632)	A	EA	4	•	•	•	•	•	•	•	•	24	2
R	PCOZZ	4720-197-1594	HOSE, SILICONE COATED: FIBERGLASS GUN1000-40-24 (16632)	B	EA	4	•	•	•	•	•	•	•	•	24	2
	MOOZZ		GASKET: ASBESTOS, 1/8 IN. THK MMC39-43 (98042) MANUFACTURE FROM:	AB	EA	1									24	3
	PCOZZ	5330-222-2564	GASKET, AS REQUIRED MILA7021CLASS1 (81349)		SH		•	•	•	•	•	•			24	
	MOOZZ		GASKET, ASBESTOS MMC39-47 (98042) MANUFACTURE FROM:	AB	EA	5									24	4
	PCOZZ	5330-222-2564	GASKET, AS REQUIRED MILA7021CLASS1 (81349)		SH		•	•	•	•	•	•			24	
	PBOZZ	2990-437-0758	MUFFLER, WATER COOLED MMC39-1-18 (98042)	A	EA	4	•	•	•	•	•	•	•	•	24	5
	PBOZZ	2990-437-0759	MUFFLER, WATER COOLED 10244WSH (91435)	B	EA	4	•	•	•	•	•	•	•	•	24	5
R	PCOZZ	4720-45[illegible]-6345	HOSE ASSEMBLY: FLEXIBLE, MUFFLER MMC39-53 (98042)	A	EA	4	•	•	•	•	•	•	•	•	24	6
	PCOZZ		HOSE ASSEMBLY: FLEXIBLE, MUFFLER 13-7-9-208 (26571)	B	EA	1	•	•	•	•	•	•	•	•	24	6
	PCOZZ	5640-360-2495	CLOTH, ASBESTOS WIRE: INSERTED MILC10316CLASS1GRADEAA (81349)	A	FT	8	•	•	•	•	•	•	•	•	24	7
	PCOZZ		INSULATION: FIBERGLASS, 2 1/2 IN. THK TEMMAT2-1-2IN (08869)	B	FT	40	•	•	•	•	•	•	•	•	24	7
N	PAOZZ	5310-913-8881	NUT, PLAIN, HEXAGON: 3/8-16 THD SIZE MS51971-3 (96906)	C	EA	2	•	•	•	•	•	•	•	•	25	1
N	PAOZZ	5310-984-7042	WASHER, LOCK: 3/8 IN. SCREW SIZE MS35338-141 (96906)	C	EA	2	•	•	•	•	•	•	•	•	25	2
N	PAOZZ	5305-717-5467	SCREW, CAP, HEXAGON HEAD: 3/8-16 THD SIZE, 1 1/4 IN. LG MS35307-362 (96906)	C	EA	2	•	•	•	•	•	•	•	•	25	3
N	PAOZZ	5310-768-0321	NUT, PLAIN, HEXAGON: 1/2-13 THD SIZE MS51971-5 (96906)	C	EA	128	•	•	•	•	•	•	•	•	25	4

	(1) SMR CODE	(2) FEDERAL STOCK NUMBER	(3) DESCRIPTION REF NUMBER & MFR CODE	USABLE ON CODE	(4) UNIT OF MEAS	(5) QTY INC IN UNIT	(6) 30-DAY DS MAINT ALLOWANCE (a) 1-20	(b) 21-50	(c) 51-100	(7) 30-DAY GS MAINT ALLOWANCE (a) 1-20	(b) 21-50	(c) 51-100	(8) 1-YR ALW PER 100 EQUIP CNTGY	(9) DEPOT MAINT ALW PER 100 EQUIP	(10) ILLUSTRATION (a) FIG. NO.	(b) ITEM NO.
N	PAOZZ	5310-933-8778	WASHER, LOCK: 1/2 IN. SCREW SIZE MS35338-143 (96906)	C	EA	128	•	•	•	•	•	•	•	•	25	5
N	PAOZZ	5305-021-3806	SCREW, CAP, HEXAGON HEAD: 1/2-13 THD SIZE, 1 1/2 IN. LG MS35307-413 (96906)	C	EA	128	•	•	•	•	•	•	•	•	25	6
N	PAOZZ	5310-614-3506	WASHER, FLAT: 1/2 IN. MS15795-817 (96906)	C	EA	96	•	•	•	•	•	•	•	•	25	7
N	PBOZZ	2990-223-3300	MUFFLER, UPPER ASSEMBLY: PORT FORWARD 205-4510947DET4CPF (80064)	C	EA	1	•	•	•	•	•	•	•	•	25	8
N	PBOZZ	2990-165-9556	MUFFLER, UPPER ASSEMBLY: STARBOARD FORWARD 205-4510947DET4CSF (80064)	C	EA	1	•	•	•	•	•	•	•	•	25	8
N	PBOZZ	2990-165-9559	MUFFLER, UPPER ASSEMBLY: PORT AFT 205-4510947DET5CPA (80064)	C	EA	1	•	•	•	•	•	•	•	•	25	8
N	PBOZZ	2990-223-3291	MUFFLER, UPPER ASSEMBLY: STARBOARD AFT 205-4510947DET5CSA (80064)	C	EA	1	•	•	•	•	•	•	•	•	25	8
N	PAOZZ	4730-908-6294	CLAMP, HOSE: 7 IN. MS35842-16 (96906)	C	EA	8	•	•	•	•	•	•	•	•	25	9
N	PCOZZ	4730-168-2107	HOSE, EXHAUST: 5 1/2 IN. ID 55Y (81900) (6 IN. REQUIRED)	C	EA	4	•	•	•	•	•	•	•	•	25	10
N	PAOZZ	5305-646-7389	SCREW, CAP, HEXAGON HEAD: 1/2-13 THD SIZE, 1 IN. LG MS35307-409 (96906)	C	EA	32	•	•	•	•	•	•	•	•	25	11
	PAOZZ	5310-614-3506	WASHER, FLAT: 1/2 IN. MS15795-817 (96906)		EA	32	•	•	•	•	•	•	•	•	25	12
N	XDOZZ		CONNECTOR, OVERBOARD: ENGINE EXHAUST 205-4510947DET5A (80064)	C	EA	1									25	13
N	MOOZZ		GASKET: 1/8 IN. THK, HI-TEMP ASBESTOS, 5 5/8 IN. ID X 8 1/2 IN. OD 205-4510947-44 (80064) MANUFACTURE FROM:	C	EA	8									25	14
N	PCOZZ	5330-663-7313	GASKET, ASBESTOS, AS REQUIRED HHP46 (81348)		SH		•	•	•	•	•	•			25	
N	XDOZZ		ELBOW ASSEMBLY: MUFFLER OUTLET 205-4510947DET4C1 (80064)	C	EA	4									25	15
N	MOOZZ		GASKET: HI-TEMP ASBESTOS, 1/8 IN. THK, 4 1/4 IN. ID X 8 IN. OD 205-4510947-33 (80064) MANUFACTURE FROM:	C	EA	12									25	16
N	PCOZZ	5330-222-2564	GASKET, ASBESTOS, 1/8 IN. THK, AS REQUIRED MILA7021CLASS1 (81348)		SH		•	•	•	•	•	•			25	
N	MOOZZ		GASKET: ASBESTOS, 1/8 IN. THK, 13 IN. ID X 16 3/4 IN. OD 205-4510947-54 (80064) MANUFACTURE FROM:	C	EA	8									25	17
N	PCOZZ	5330-222-2564	GASKET, ASBESTOS, 1/8 IN. THK, AS REQUIRED MILA7021CLASS1 (81349)		FT		•	•	•	•	•	•			25	
N	PBOZZ		MUFFLER, BOTTOM ASSEMBLY, W/BAFFLE 205-4510947DET4B4B1 (80064)	C	EA	4	•	•	•	•	•	•	•	•	25	18
N	XDOZZ		PIPE ASSEMBLY: ENGINE EXHAUST, UPPER, OUTBOARD 205-4510947DET4D5D0 (80064)	C	EA	1									25	19
N	XDOZZ		PIPE ASSEMBLY: ENGINE EXHAUST, UPPER, INBOARD 205-4510947DET4D1 (80064)	C	EA	1									25	19

	(1) SMR CODE	(2) FEDERAL STOCK NUMBER	(3) DESCRIPTION REF NUMBER & MFR CODE	USABLE ON CODE	(4) UNIT OF MEAS	(5) QTY INC IN UNIT	(6) 30-DAY DS MAINT ALLOWANCE (a) 1-20	(b) 21-50	(c) 51-100	(7) 30-DAY GS MAINT ALLOWANCE (a) 1-20	(b) 21-50	(c) 51-100	(8) 1-YR ALW PER 100 EQUIP CNTGY	(9) DEPOT MAINT ALW PER 100 EQUIP	(10) ILLUSTRATION (a) FIG. NO.	(b) ITEM NO.
N	PAOZZ	2990-477-6803	ENGINE, FLEXIBLE: EXHAUST CONNECTION ASSEMBLY 205-4510947DET58 (80064)	C	EA	4	•	•	•	•	•	•	•	•	25	20
N	XDOZZ		CONNECTOR ASSEMBLY: END EXHAUST MANIFOLD 205-4510947DET30 (80064)	C	EA	1									25	21
	PAOZZ		VALVE, CHECK: 1 IN., BRONZE, SOLDER 1303-1 (14959)	A	EA	2	•	•	•	•	•	•	•	•		
	MOOZZ		HOSE, FLEXIBLE: 1/2 IN. ID X 6 IN. LG EXPANSION TANK TO HEAT EXCHANGE 358 (24161) MANUFACTURE FROM:	B	EA	1										
	PCOZZ	4720-999-4040	HOSE, AS REQUIRED		FT		•	•	•	•	•	•				
	PAOZZ	4730-908-3193	CLAMP, HOSE: 1 1/4 IN. MS35842-12 (96906)	B	EA	4	•	•	•	•	•	•	•	•		
	MOOZZ		HOSE, FLEXIBLE: 1 1/4 IN. ID X 6 IN. LG HEAT EXCHANGE TO EXPANSION TANK 25-24-213 (26571) MANUFACTURE FROM:	B	EA	1										
	PCOZZ	4720-235-4120	HOSE, AS REQUIRED		FT		•	•	•	•	•	•				
	PAOZZ	4730-909-8627	CLAMP, HOSE: 2 1/4 IN. MS35842-13 (96906)	B	EA	4	•	•	•	•	•	•	•	•		
	PAOZZ		PLUG, COCK: 2 IN. IPS SCREWED, BRONZE 250-21N (14959)	B	EA	2	•	•	•	•	•	•	•	•		
	MOOZZ		HOSE, RUBBER: 1 7/8 IN. ID X 4 IN. LG 35W (24161) MANUFACTURE FROM:	B	EA	8										
	PCOZZ	4720-189-2782	HOSE, RUBBER, 1.875 IN. ID AS REQUIRED ZZH428TYPE1CLASS2GRADEA (81348)		FT		•	•	•	•	•	•				
	XDOZZ		ELBOW: 90 DEG, 1/2 IN. SCREWED, BRONZE WWP460CLASSA (81348)	B	EA	3										
	XDOZZ		ELBOW: 45 DEG, TUBE, 1 1/2 IN. WWP460CLASSA (81348)	B	EA	2										
N	PAOZZ	5305-685-8156	SCREW, CAP, HEXAGON HEAD: 1/2-13 THD SIZE, 2 1/4 IN. LG MS35307-416 (96906)	C	EA	16	•	•	•	•	•	•	•	•		
N	MOOZZ		CLIP, LAGGING: SPRING WIRE, .051 DIA 205-4510947-45 (80064) MANUFACTURE FROM:	C	EA	300										
N	PAOZZ	9505-596-1668	WIRE, .051 DIA, STAINLESS STEEL, AS REQUIRED QQW423 (81348)		CL		•	•	•	•	•	•				
N	MOOZZ		ASBESTOS CLOTH, INSERTED: .070 THK X 40 IN. W 205-4510947-46 (80064) MANUFACTURE FROM:	C	EA	1										
N	PCOZZ	5640-360-2495	CLOTH, WIRE, INSERTED, AS REQUIRED MILC10316CLASS1GRADEAA (81349)		YD		•	•	•	•	•	•				
N	MOOZZ		WIRE, SOFT: .030 DIA CRES 205-4510947-47 (80064) MANUFACTURE FROM:	C	EA	1										
N	PAOZZ	9505-554-9159	WIRE, SOFT, .031 DIA, AS REQUIRED QQW423COMP316 (81349)		CL		•	•	•	•	•	•				
N	PAOZZ	5310-768-0321	NUT, PLAIN, HEXAGON: 1/2-13 THD SIZE MS51971-5 (96906)	C	EA	64	•	•	•	•	•	•	•	•		
N	PAOZZ	5310-767-9425	WASHER, FLAT: 1/2 IN. SCREW SIZE MS15795-818 (96906)	C	EA	48	•	•	•	•	•	•	•	•		

(1) SMR CODE	(2) FEDERAL STOCK NUMBER	(3) DESCRIPTION REF NUMBER & MFR CODE	USABLE ON CODE	(4) UNIT OF MEAS	(5) QTY INC IN UNIT	(6) 30-DAY DS MAINT ALLOWANCE (a) 1-20	(b) 21-50	(c) 51-100	(7) 30-DAY GS MAINT ALLOWANCE (a) 1-20	(b) 21-50	(c) 51-100	(8) 1-YR ALW PER 100 EQUIP CNTGY	(9) DEPOT MAINT ALW PER 100 EQUIP	(10) ILLUSTRATION (a) FIG. NO.	(b) ITEM NO.
N PCOZZ		INSULATION: 2 1/2 IN. THK TEMPMAT2-1-2IN (08869)	C	YD	11	•	•	•	•	•	•	•	•		
N PAOZZ	5305-727-6804	SCREW, CAP, HEXAGON HEAD: 1/2-13 THD SIZE, 1 3/4 IN. LG MS35307-814 (96906)	C	EA	32	•	•	•	•	•	•	•	•		
PAOZZ		VALVE, PLUG, COCK: 2 IN. IPS, FLANGED 959 (48422)	A	EA	2	•	•	•	•	•	•	•	•		
PAOZZ	4730-908-3193	CLAMP, HOSE: 1 3/8 IN. MS35842-12 (96906)	AB	EA	4	•	•	•	•	•	•	•	•		
MOOZZ		HOSE, CONNECTING: 7/8 IN. ID MHC80F88 (96042) MANUFACTURE FROM:	A	EA	1										
PCOZZ	4720-230-6526	HOSE, AS REQUIRED		FT		•	•	•	•	•	•				
PAOZZ		HOSE, FLEXIBLE: STAINLESS STEEL SCHICT321-8X8-1-2 (91198)	AB	FT	2	•	•	•	•	•	•	•	•		
		GROUP 19 - FRESH WATER PUMP													
PAOZZ	5306-613-9596	BOLT ASSEMBLY, SEAL WASHER: PUMP ASSEMBLY MTG 5118219 (72582)		EA	12	•	•	•	•	•	•	•	•	26	1
R KFOZZ		GASKET: FRESH WATER PUMP MTG 5150193 (72582) (PART OF KITS, FSN 5330-379-4301, 2930-986-4068 AND 2930-025-6743)		EA	4									26	2
PAOZZ	5306-225-8500	BOLT, MACHINE: FLANGE MTG, 5/16-18 THD SIZE, 1 1/8 IN. LG MS90725-35 (96906)		EA	8	•	•	•	•	•	•	•	•	26	3
PAOZZ	5310-407-9566	WASHER, LOCK: FLANGE MTG, 5/16 IN. SCREW SIZE MS35338-45 (96906)		EA	8	•	•	•	•	•	•	•	•	26	4
R PAOZZ	5330-774-4058	RETAINER, PACKING: WATER PUMP 5173730 (72582)		EA	4	•	•	•	•	•	•	•	•	26	5
KFOZZ		PACKING, PREFORMED: FLANGE 5150191 (72582) (PART OF KITS, FSN 5330-379-4301, 2930-986-4068 AND 2930-025-6743)		EA	4									26	6
PAOZZ	4820-276-9041	COCK, DRAIN: FRESH WATER PUMP BODY MS35782-6 (96906)		EA	4	•	•	•	•	•	•	•	•	26	7
R PAOZZ	5310-768-0319	NUT, PLAIN, HEXAGON: WATER PUMP COVER MTG, 1/4-28 THD SIZE 121902 (72582)		EA	16	•	•	•	•	•	•	•	•	26	8
R PAOZZ	5310-562-5965	WASHER, LOCK: WATER PUMP COVER MTG, 1/4 IN. SCREW SIZE MS35338-44 (96906)		EA	16	•	•	•	•	•	•	•	•	26	9
XAFZZ		COVER, WATER PUMP 5186313 (72582)		EA	4									26	10
KFOZZ		GASKET: WATER PUMP COVER 5150188 (72582) (PART OF KITS, FSN 2930-025-6743, 2930-906-4068 AND 5330-379-4301)		EA	4									26	11
PAOOF	2930-097-2479	PUMP ASSEMBLY, WATER: FRESH, LD-RD 5186570 (72582) (COMPONENTS SAME AS PUMP ASSEMBLY, FSN 2930-313-6445, EXCEPT WHERE INDIVIDUAL COMPONENTS ARE ANNOTATED)		EA	2	•	•	•	•	•	•	•	•	26	12
PAOOF	2930-313-6445	PUMP ASSEMBLY, WATER: FRESH, LB-RB 5186575 (72582)		EA	2	•	•	•	•	•	•	•	•	26	12
KFFZZ		IMPELLER: FRESH WATER PUMP 5126911 (72582) (PART OF KIT, FSN 2930-906-4068)		EA	4									26	13

(1) SMR CODE	(2) FEDERAL STOCK NUMBER	(3) DESCRIPTION REF NUMBER & MFR CODE / USABLE ON CODE	(4) UNIT OF MEAS	(5) QTY INC IN UNIT	(6) 30-DAY DS MAINT ALLOWANCE (a) 1-20	(b) 21-50	(c) 51-100	(7) 30-DAY GS MAINT ALLOWANCE (a) 1-20	(b) 21-50	(c) 51-100	(8) 1-YR ALW PER 100 EQUIP CNTGY	(9) DEPOT MAINT ALW PER 100 EQUIP	(10) ILLUSTRATION (a) FIG. NO.	(b) ITEM NO.
C KFOZZ		SEAL ASSEMBLY: FRESH WATER PUMP 5186571 (72582) (PART OF KITS, FSN 2930-986-4068 AND 2930-025-6743)	EA	4									26	14
KFOZZ		SPRING, SEAL: FRESH WATER PUMP 5186570 (72582) (PART OF KITS, FSN 2930-986-4068 AND 2930-025-6743)	EA	4									26	15
C KFOZZ		BUSHING, SLEEVE: INSERT, FRESH WATER PUMP 5186572 (72582) (PART OF KITS, FSN 2930-986-4068 AND 2930-025-6743)	EA	4									26	16
KFFZZ		SHAFT ASSEMBLY: FRESH WATER PUMP 5136671 (72582) (PART OF KIT, FSN 2930-986-4068)	EA	4									26	17
PAFZZ	2930-294-4664	DEFLECTOR: FRESH WATER PUMP SHAFT 5189041 (72582)	EA	4	•	•	•	•	•	•	•	•	26	18
KFFZZ		DEFLECTOR: COUPLING 5114011 (72582) (PART OF KIT, FSN 2930-986-4068)	EA	4									26	18
XAFZZ		BODY ASSEMBLY: FRESH WATER PUMP, B ENGINE 5196573 (72582) (U/W PUMP ASSEMBLY, FSN 2930-313-6445, ONLY)	EA	2									26	19
XAFZZ		BODY ASSEMBLY: FRESH WATER PUMP, D ENGINE 5186574 (72582) (U/W PUMP ASSEMBLY, FSN 2930-097-2479, ONLY)	EA	2									26	19
PAFZZ	5307-636-5854	STUD, PLAIN: WATER PUMP COVER MTG, ONE END 1/4-20 THD SIZE, OTHER END 1/4-28 THD SIZE 5150182 (72582)	EA	16	•	•	•	•	•	•	•	•	26	20
PCOZZ	2930-025-6743	PARTS KIT: SEAL, FRESH WATER PUMP 5193609 (72582) (CONSISTS OF)	EA	4	•	•	•	•	•	•	•	•	26	
		4-GASKET											26	2
		4-PACKING											26	6
		4-GASKET											26	11
		4-SEAL											26	14
		4-SPRING											26	15
		4-BUSHING											26	16
PCFZZ	2930-986-4068	REPAIR KIT: FRESH WATER PUMP 5196307 (72582) (CONSISTS OF)	EA	4	•	•	•	•	•	•	•	•	26	
		4-GASKET											26	2
		4-PACKING											26	6
		4-GASKET											26	11
		4-IMPELLER											26	13
		4-SEAL											26	14
		4-SPRING											26	15
		4-BUSHING											26	16
		4-SHAFT											26	17
		4-DEFLECTOR											26	18

	(1) SMR CODE	(2) FEDERAL STOCK NUMBER	(3) DESCRIPTION REF NUMBER & MFR CODE	USABLE ON CODE	(4) UNIT OF MEAS	(5) QTY INC IN UNIT	(6) 30-DAY DS MAINT ALLOWANCE (a) 1-20	(b) 21-50	(c) 51-100	(7) 30-DAY GS MAINT ALLOWANCE (a) 1-20	(b) 21-50	(c) 51-100	(8) 1-YR ALW PER 100 EQUIP CNTGY	(9) DEPOT MAINT ALW PER 100 EQUIP	(10) ILLUSTRATION (a) FIG. NO.	(b) ITEM NO.
			GROUP 20 - RAW WATER PUMP													
C	PAOFF	4320-389-9090	PUMP, ROTARY: RAW WATER 5186476 (72582)	AB	EA	2	*	*	*	*	*	*	*	*	27	
C	PAOZZ	5305-012-0233	SCREW, CAP, HEXAGON: PUMP MTG, 3/8-16 THD SIZE, 1 IN. LG 120233 (72582)	AB	EA	12	*	*	*	*	*	*	*	*	27	1
C	PAOZZ	5310-637-9541	WASHER, LOCK: PUMP MTG, 3/8 IN. SCREW SIZE MS35338-46 (96906)	AB	EA	12	*	*	*	*	*	*	*	*	27	2
C	KFOZZ		GASKET: RAW WATER PUMP TO ADAPTER 5194567 (72582) (PART OF KIT, FSN 2930-461-3897)	AB	EA	2									27	3
C	PAOZZ	4820-752-9040	COCK, DRAIN: 1/8 IN. PIPE MS35782-4 (96906)	AB	EA	2	*	*	*	*	*	*	*	*	27	4
C	KFFZZ		SCREW, MACHINE: PUMP BODY, NO. 10-32 THD SIZE, 3/8 IN. LG 101075 (72582) (PART OF KIT, FSN 2930-461-3898)	AB	EA	2									27	5
C	KFOZZ		SCREW, MACHINE: COVER MTG, NO. 10-32 THD SIZE, 3/8 IN. LG 101075 (72582) (PART OF KIT, FSN 2930-461-3897)	AB	EA	12									27	6
C	XAOZZ		COVER: RAW WATER PUMP 5196585 (72582) (PART OF KIT, FSN 2930-461-3897)	AB	EA	2									27	7
C	KFOZZ		GASKET: RAW WATER PUMP COVER 5193603 (72582) (PART OF KIT, FSN 2930-461-3898)	AB	EA	2									27	8
C	PAFZZ		NUT, LOCK: DRIVE GEAR, 5/8-18 THD SIZE 451078 (72582)	AB	EA	2	*	*	*	*	*	*	*	*	27	9
C	PAFZZ	5310-820-6653	WASHER, LOCK: DRIVE GEAR, 5/8 IN. SCREW SIZE MS35338-50 (96906)	AB	EA	2	*	*	*	*	*	*	*	*	27	10
C	PAFZZ	2815-400-0496	GEAR, SPUR: WATER PUMP DRIVE 5161021 (72582)	AB	EA	2	*	*	*	*	*	*	*	*	27	11
C	KFOZZ		SEAL, PLAIN: RAW WATER PUMP 5195020 (72582) (PART OF KIT, FSN 2930-461-3897)	AB	EA	2									27	12
C	KFFZZ		RING, RETAINING: BEARING 9416358 (72582) (PART OF KIT, FSN 2930-461-3897)	AB	EA	2									27	13
C	KFFZZ		BEARING, BALL: SHAFT 5550411C (83330) (PART OF KIT, FSN 2930-461-3897)	AB	EA	2									27	14
C	PAFZZ	5340-294-0617	SPACER, SLEEVE: RAW WATER PUMP BEARING 5193592 (72582)	AB	EA	2	*	*	*	*	*	*	*	*	27	15
C	KFFZZ		SEAL, PLAIN: RAW WATER PUMP BEARING 5195019 (72582) (PART OF KIT, FSN 2930-461-3897)	AB	EA	2									27	16
C	KFFZZ		KEY, WOODRUFF: DRIVE GEAR, 5/32 X 7/8 IN. 5161024 (72582) (PART OF KIT, FSN 2930-461-3897)	AB	EA	2									27	17
C	PAFZZ	2930-349-6450	SHAFT, PUMP: RAW WATER 5193590 (72582)	AB	EA	2	*	*	*	*	*	*	*	*	27	18
C	KFFZZ		DEFLECTOR: WATER PUMP SHAFT 5193675 (72582) (PART OF KIT, FSN 2930-461-3897)	AB	EA	2									27	19

(1) SMR CODE	(2) FEDERAL STOCK NUMBER	(3) DESCRIPTION REF NUMBER & MFR CODE	USABLE ON CODE	(4) UNIT OF MEAS	(5) QTY INC IN UNIT	(6) 30-DAY DS MAINT ALLOWANCE (a) 1-20	(b) 21-50	(c) 51-100	(7) 30-DAY GS MAINT ALLOWANCE (a) 1-20	(b) 21-50	(c) 51-100	(8) 1-YR ALW PER 100 EQUIP CNTGY	(9) DEPOT MAINT ALW PER 100 EQUIP	(10) ILLUSTRATION (a) FIG. NO.	(b) ITEM NO.
C KFFZZ		SEAL, PLAIN, ENCLOSED: WATER PUMP SHAFT 5193599 (72582) (PART OF KIT, FSN 2930-461-3898)	AB	EA	2									27	20
C PCFZZ	2930-590-1717	PACKING, PREFORMED: SHAFT SEAL 5193596 (72582)	AB	EA	2	•	•	•	•	•	•	•	•	27	21
C PAFZZ	5310-595-6711	WASHER, FLAT: SEAL SEAT SPACER 5193597 (72582)	AB	EA	2	•	•	•	•	•	•	•	•	27	22
C KFFZZ		WEAR PLATE: RAW WATER PUMP 5196696 (72582) (PART OF KIT, FSN 2930-461-3897)	AB	EA	2									27	23
C PAFZZ	2815-445-8776	CAM: OFFSET RAW WATER PUMP 5196696 (72582)	AB	EA	2	•	•	•	•	•	•	•	•	27	24
C KFDYZ		IMPELLER, PUMP 5196629 (72582) (PART OF KIT, FSN 2930-461-3897)	AB	EA	2									27	25
C KAFZZ		BODY: RAW WATER PUMP 5193593 (72582)	AB	EA	2									27	26
C PADZZ	5305-045-1988	SCREW, CAP, HEXAGON HEAD: PUMP MTG, 7/16-14 THD SIZE, 1 1/4 IN. LG MS90725-87 (96906)	AB	EA	2	•	•	•	•	•	•	•	•	27	27
C PADZZ	5310-209-0965	WASHER, LOCK: PUMP MTG, 7/16 IN. MS35338-47 (96906)	AB	EA	2	•	•	•	•	•	•	•	•	27	28
C PADZZ	5305-053-8993	SCREW, CAP, HEXAGON HEAD: PUMP MTG, 1/2-13 THD SIZE, 1 3/8 IN. LG MS90725-112 (96906)		EA	8	•	•	•	•	•	•	•	•	27	29
C PADZZ	5310-584-5272	WASHER, LOCK: PUMP MTG, 1/2 IN. MS35338-48 (96906)		EA	8	•	•	•	•	•	•	•	•	27	30
XDFZZ		ADAPTER: HOUSING, RAW WATER PUMP 5193551 (72582)		EA	2									27	31
PCOZZ	5330-620-7359	GASKET: WATER PUMP MTG 5117061 (72582)		EA	1	•	•	•	•	•	•	•	•	27	32
C PADZZ	2910-932-4813	COUPLING: WATER PUMP DRIVE 5133716 (72582)		EA	1	•	•	•	•	•	•	•	•	27	33
C PADZZ	5306-638-4963	BOLT, EXTERNALLY RELIEVED: PUMP DRIVE 5176474 (72582)	AB	EA	4	•	•	•	•	•	•	•	•	27	34
C PADZZ	2815-898-4468	PLATE, DRIVE: RAW WATER PUMP 5131627 (72582)	AB	EA	1	•	•	•	•	•	•	•	•	27	35
C PADZZ	2815-214-3760	PLATE, RETAINING: SPACER, WATER PUMP DRIVE 5177026 (72582)	AB	EA	1	•	•	•	•	•	•	•	•	27	36
N PAUFF	2815-793-6786	PUMP, ROTARY, RAW WATER 5115396 (72582)	C	EA	1	•	•	•	•	•	•	•	•	28	
N PADZZ	5305-045-1988	SCREW, CAP, HEXAGON HEAD: PUMP MTG, 7/16-14 THD SIZE, 1 1/2 IN. LG MS90725-87 (96906)	C	EA	1	•	•	•	•	•	•	•	•	28	1
N PADZZ	5310-209-0965	WASHER, LOCK: PUMP MTG, 7/16 IN. SCREW SIZE MS35338-47 (96906)	C	EA	1	•	•	•	•	•	•	•	•	28	2
N PADZZ	5305-053-8993	SCREW, CAP, HEXAGON HEAD: PUMP MTG, 1/2-13 THD SIZE, 1 1/2 IN. LG MS90725-112 (96906)	C	EA	4	•	•	•	•	•	•	•	•	28	3
N PADZZ	5310-584-5272	WASHER, LOCK: PUMP MTG, 1/2 IN. SCREW SIZE MS35338-48 (96906)	C	EA	4	•	•	•	•	•	•	•	•	28	4
N PCOZZ	2330-765-1059	GASKET: RAW WATER PUMP MTG 5194567 (72582)	C	EA	1	•	•	•	•	•	•	•	•	28	5

(1) SMR CODE	(2) FEDERAL STOCK NUMBER	(3) DESCRIPTION — REF NUMBER & MFR CODE	USABLE ON CODE	(4) UNIT OF MEAS	(5) QTY INC IN UNIT	(6) 30-DAY DS MAINT ALLOWANCE (a) 1-20	(b) 21-50	(c) 51-100	(7) 30-DAY GS MAINT ALLOWANCE (a) 1-20	(b) 21-50	(c) 51-100	(8) 1-YR ALW PER 100 EQUIP CNTGY	(9) DEPOT MAINT ALW PER 100 EQUIP	(10) ILLUSTRATION (a) FIG. NO.	(b) ITEM NO.
N KFOZZ		SCREW, MACHINE: NO. 10-32 THD SIZE, 3/8 IN. FILLISTER HEAD 114366 (72582) (PART OF KIT, FSN 2930-461-3897 AND 2930-767-0508)	C	EA	6									28	6
N KFFZZ		COVER: RAW WATER PUMP 5193555 (72582) (PART OF KIT, FSN 2930-461-3897)	C	EA	1									28	7
N KFFZZ		GASKET: RAW WATER PUMP COVER 5193562 (72582) (PART OF KIT, FSN 2930-461-3897 AND 2930-767-0508)	C	EA	1									28	8
N PAOZZ	5306-989-0830	BOLT, MACHINE: 3/8-16 THD SIZE, 1 IN. LG 186678 (72582)	C	EA	6	*	*	*	*	*	*	*	*	28	9
N PAOZZ	5310-637-9541	WASHER, LOCK: 3/8 IN. MS35338-46 (96906)	C	EA	6	*	*	*	*	*	*	*	*	28	10
N XBOZZ		ADAPTER: HOUSING, RAW WATER 5193551 (72582)	C	EA	1									28	11
N PAFZZ	5310-136-5712	NUT, LOCK, HEXAGON HEAD: 5/8-18 THD SIZE 122366 (72582)	C	EA	1	*	*	*	*	*	*	*	*	28	12
N PAFZZ	5310-820-6653	WASHER, LOCK: 5/8 IN. MS35338-50 (96906)	C	EA	1	*	*	*	*	*	*	*	*	28	13
N PAFZZ	2815-400-0496	GEAR, SPUR: WATER PUMP DRIVE 5161021 (72582)	C	EA	1	*	*	*	*	*	*	*	*	28	14
N KFFZZ		SEAL, PLAIN, BEARING 5195101 (72582) (PART OF KIT, FSN 2930-461-3897)	C	EA	1									28	15
N KFFZZ		RING, RETAINING: LARGE 9415283 (72582) (PART OF KIT, FSN 2930-461-3897)	C	EA	1									28	16
N KFFZZ		RING, RETAINING: SMALL 5193569 (72582) (PART OF KIT, FSN 2930-461-3897)	C	EA	1									28	17
N KFFZZ		BEARING, BALL 5550AX1C (43334) (PART OF KIT, FSN 2930-461-3897)	C	EA	1									28	18
N KFOZZ		SEAL, PLAIN, ENCLOSED: WATER PUMP SHAFT 5198419 (72582) (PART OF KIT, FSN 2930-461-3897 AND 2930-767-0508)	C	EA	1									28	19
N KFFZZ		KEY, WOODRUFF: 5/32 X 7/8 IN. LG 5161024 (72582) (PART OF KIT, FSN 2930-461-3897)	C	EA	1									28	20
N KFFZZ		SHAFT: PUMP, RAW WATER 5193552 (72582) (PART OF KIT, FSN 2930-461-3897)	C	EA	1									28	21
N KFFZZ		DEFLECTOR: WATER PUMP SHAFT 5193676 (72582) (PART OF KIT, FSN 2930-461-3897)	C	EA	1									28	22
N PAFZZ	2930-932-4819	SEAT, SHAFT SEAL 5193668 (72582)	C	EA	1	*	*	*	*	*	*	*	*	28	23
N KFFZZ		SEAL, CARBON 5193564 (72582) (PART OF KIT, FSN 2930-461-3897)	C	EA	1									28	24
N PCFZZ	2930-019-4754	PACKING, PREFORMED: SHAFT SEAL 5193567 (72582)	C	EA	1	*	*	*	*	*	*	*	*	28	25
N PAFZZ	5310-894-2520	WASHER, FLAT: SEAL SEAT SPACER 5193667 (72582)	C	EA	1	*	*	*	*	*	*	*	*	28	26

(1) SMR CODE	(2) FEDERAL STOCK NUMBER	(3) DESCRIPTION REF NUMBER & MFR CODE	USABLE ON CODE	(4) UNIT OF MEAS	(5) QTY INC IN UNIT	(6) 30-DAY DS MAINT ALLOWANCE (a) 1-20	(b) 21-30	(c) 31-100	(7) 30-DAY GS MAINT ALLOWANCE (a) 1-20	(b) 21-30	(c) 31-100	(8) 1-YR ALW PER 100 EQUIP CNTGY	(9) DEPOT MAINT ALW PER 100 EQUIP	(10) ILLUSTRATION (a) FIG. NO.	(b) ITEM NO.
N PAFZZ	5310-332-9562	WASHER, MARCEL 5193563 (72582)	C	EA	1	•	•	•	•	•	•	•	•	28	27
N KFFZZ		WEAR PLATE: RAW WATER PUMP 5193556 (72582) (PART OF KIT, FSN 2930-461-3897)	C	EA	1									28	28
N PAFZZ	2930-330-4587	CAM 5193554 (72582)	C	EA	1	•	•	•	•	•	•	•	•	28	29
N KFDZZ		IMPELLER, PUMP 5193553 (72582) (PART OF KIT, FSN 2930-461-3897 AND 2930-767-0508)	C	EA	1									28	30
N PAFZZ	5305-011-4366	SCREW, MACHINE: NO. 10-32 THD SIZE, 3/8 IN. FILLISTER HEAD 114366 (72582)	C	EA	6	•	•	•	•	•	•	•	•	28	31
N XAFZZ		BODY, RAW WATER PUMP 5195411 (72582)	C	EA	1									28	32
N XDFZZ		PIN, DOWEL 5197597 (72582)	C	EA	1										
N PCDZZ	5330-620-7359	GASKET: INLET AND OUTLET MTG 5117061 (72582) (PART OF KIT, FSN 2930-461-3897)	C	EA	2	•	•	•	•	•	•	•	•	28	33
N PADZZ	2910-932-4813	COUPLING, PUMP DRIVE 5143616 (72582)	C	EA	1	•	•	•	•	•	•	•	•	28	34
N PADZZ	5306-869-2868	BOLT, HEXAGON HEAD: SPECIAL PUMP DRIVE 5145092 (72582)	C	EA	2	•	•	•	•	•	•	•	•	28	35
N XDDZZ		PLATE, DRIVE: RAW WATER PUMP 5170450 (72582)	C	EA	1									28	36
PCFZZ	2930-461-3897	KIT, RECONDITIONING: RAW WATER PUMP 5197226 (72582) (CONSISTS OF)	AB	EA	1	•	•	•	•	•	•	•	•	27	
		1-GASKET												27	3
		1-SCREW												27	5
		6-SCREW												27	6
		1-COVER												27	7
		1-GASKET												27	8
		1-SEAL												27	12
		1-RING												27	13
		1-BEARING												27	14
		1-SEAL												27	16
		1-KEY												27	17
		1-SHAFT												27	18
		1-DEFLECTOR												27	19
		1-SEAL												27	20
		1-IMPELLER												27	25
		1-PLATE												27	33
PCDZZ	2930-461-3898	KIT, REPLACEMENT: RAW WATER PUMP 5197227 (72582) (CONSISTS OF)	AB	EA	1	•	•	•	•	•	•	•	•	27	
		24-SCREW												27	6
		4-GASKET												27	8
		4-SEAL												27	20
		4-IMPELLER												27	25

(1) SMR CODE	(2) FEDERAL STOCK NUMBER	(3) DESCRIPTION REF NUMBER & MFR CODE	USABLE ON CODE	(4) UNIT OF MEAS	(5) QTY INC IN UNIT	(6) 30-DAY DS MAINT ALLOWANCE (a) 1-20	(b) 21-50	(c) 51-100	(7) 30-DAY GS MAINT ALLOWANCE (a) 1-20	(b) 21-50	(c) 51-100	(8) 1-YR ALW PER 100 EQUIP CNTGY	(9) DEPOT MAINT ALW PER 100 EQUIP	(10) ILLUSTRATION (a) FIG. NO.	(b) ITEM NO.
PCFZZ	2930-461-3897	KIT, RECONDITIONING: RAW PUMP 5197226 (72582) (CONSISTS OF)	C	EA	1	*	*	*	*	*	*	*	*	28	
		1-GASKET												28	5
		6-SCREW												28	6
		1-COVER												28	7
		1-GASKET												28	8
		1-SEAL												28	15
		1-RING												28	16
		1-RING												28	17
		1-BEARING												28	18
		1-SEAL												28	19
		1-KEY												28	20
		1-SHAFT												28	21
		1-DEFLECTOR												28	22
		1-SEAL												28	24
		1-PLATE												28	28
		1-IMPELLER												28	30
		2-GASKET												28	33
PCDZZ	2930-767-0508	KIT, REPLACEMENT 5194860 (72582) (CONSISTS OF)	C	EA	1	*	*	*	*	*	*	*	*	28	
		6-SCREW												28	6
		1-GASKET												28	8
		1-SEAL												28	19
		1-IMPELLER												28	30
		GROUP 21 - WATER MANIFOLD, ENGINE													
PADZZ	4730-908-3194	CLAMP, HOSE: WATER BY-PASS HOSE MS35842-11 (96906)		EA	16	*	*	*	*	*	*	*	*	29	1
XDDZZ		TUBE ASSEMBLY: WATER BY-PASS 5181802 (72582)		EA	1									29	2
C PCDZZ	4720-288-9770	HOSE, PREFORMED: 1 X 2 1/2 IN. LG 5177217 (72582)		EA	8	*	*	*	*	*	*	*	*	29	3
PADZZ	4730-019-4727	ELBOW: BY-PASS TUBE 5181801 (72582)		EA	1	*	*	*	*	*	*	*	*	29	4
PADZZ	4730-274-6285	ADAPTER, STRAIGHT: BY-PASS TUBE 5177218 (72582)		EA	1	*	*	*	*	*	*	*	*	29	5
PADZZ	5930-548-7346	CONTROL, ALARM: WATER TEMPERATURE 5173018 (72582)		EA	1	*	*	*	*	*	*	*	*	29	6
PADZZ	4730-193-0875	BUSHING, PIPE: ALARM CONTROL 144034 (72582)		EA	1	*	*	*	*	*	*	*	*	29	7
PADZZ	4730-908-6292	CLAMP: WATER OUTLET SEAL, 2 1/2 IN. DIA MS35842-14 (96906)		EA	1	*	*	*	*	*	*	*	*	29	8
KFDZZ		PACKING, PREFORMED: WATER OUTLET 5156770 (72582) (PART OF KIT, FSN 5330-379-4301)		EA	1									29	9

(1) SMR CODE	(2) FEDERAL STOCK NUMBER	(3) DESCRIPTION REF NUMBER & MFR CODE	USABLE ON CODE	(4) UNIT OF MEAS	(5) QTY INC IN UNIT	(6) 30-DAY DS MAINT ALLOWANCE (a) 1-20	(b) 21-50	(c) 51-100	(7) 30-DAY GS MAINT ALLOWANCE (a) 1-20	(b) 21-50	(c) 51-100	(8) 1-YR ALW PER 100 EQUIP CNTGY	(9) DEPOT MAINT ALW PER 100 EQUIP	(10) ILLUSTRATION (a) FIG. NO.	(b) ITEM NO.
R PAOZZ	4730-289-5176	PLUG, PIPE: WATER MANIFOLD, 1/2-14 THD SIZE MS49005-8 (96906)		EA	4	•	•	•	•	•	•	•	•	29	10
PAOZZ	5310-732-0559	NUT, PLAIN, HEXAGON: MANIFOLD MTG, 3/8-24 THD SIZE MS51968-8 (96906)		EA	48	•	•	•	•	•	•	•	•	29	11
PAOZZ	5310-637-9541	WASHER, LOCK: MANIFOLD MTG, 3/8 IN. SCREW SIZE MS35338-46 (96906)		EA	48	•	•	•	•	•	•	•	•	29	12
XDOZZ		MANIFOLD, WATER 5167294 (72582)		EA	4									29	13
KFOZZ		GASKET: WATER OUTLET MANIFOLD 5150361 (72582) (PART OF KIT, FSN 5330-379-4301)		EA	24									29	14
XDOZZ		TUBE ASSEMBLY: WATER BY-PASS 5124002 (72582)		EA	1									29	
XDOZZ		TUBE ASSEMBLY: WATER BY-PASS 5124003 (72582)		EA	1									29	
		GROUP 22 - SEA WATER STRAINER													
FB000	2040-115-3705	STRAINER, SEA WATER HD2000A (72922)		EA	2	•	•	•	•	•	•	•	•	30	
C XDOZZ		NUT, WING: END CAP S75 (72922)		EA	2									30	1
C PACZZ	5330-079-2113	WASHER, LOCK: END CAP 504F (72922)		EA	2	•	•	•	•	•	•	•	•	30	2
C XDOZZ		CAP, END S82A (72922)		EA	2									30	3
R PCCZZ	5330-929-8730	GASKET: CYLINDER 10 (72922)		EA	4	•	•	•	•	•	•	•	•	30	4
PACZZ	2040-115-3703	SCREEN, STRAINER HD99A (72922)		EA	2	•	•	•	•	•	•	•	•	30	5
C PACZZ	2040-826-6021	CYLINDER, LUCITE: STRAINER S88B (72922)		EA	2	•	•	•	•	•	•	•	•	30	6
C XDOZZ		ROD: THREADED ENDS HD98A (72922)		EA	2									30	7
C PAOZZ	5305-005-0836	SCREW AND WASHER ASSEMBLY VD3 (72922)		EA	1	•	•	•	•	•	•	•	•	30	8
C XDOZZ		HANDLE, PLUG VD2502 (72922)		EA	1									30	9
C PAOZZ		NUT, PLUG END 99NE108 (72922)		EA	1	•	•	•	•	•	•	•	•	30	10
PAOZZ	5310-981-5774	WASHER, PLUG END VD8 (72922)		EA	1	•	•	•	•	•	•	•	•	30	11
XAOZZ		BODY PLUG ASSEMBLY HD2000A93A (72922)		EA	1									30	12
		GROUP 23 - KEEL COOLER													
C PAHZZ	4730-908-6292	CLAMP, HOSE: KEEL IN COOLER HOSE, 1 1/6 INCHES MS35842-14 (96906)	AB	EA	8				•	•	•	•	•	31	1
MHHZZ		HOSE, FLEXIBLE: 2 3/8 IN. ID 24-1-213 (26571) MANUFACTURE FROM:	B	EA	1									31	2
PCHZZ	4720-235-4121	HOSE, AS REQUIRED		FT					•	•	•			31	

	(1) SMR CODE	(2) FEDERAL STOCK NUMBER	(3) DESCRIPTION REF NUMBER & MFR CODE	USABLE ON CODE	(4) UNIT OF MEAS	(5) QTY INC IN UNIT	(6) 30-DAY DS MAINT ALLOWANCE (a) 1-20	(b) 21-50	(c) 51-100	(7) 30-DAY GS MAINT ALLOWANCE (a) 1-20	(b) 21-50	(c) 51-100	(8) 1-YR ALW PER 100 EQUIP CNTGY	(9) DEPOT MAINT ALW PER 100 EQUIP	(10) ILLUSTRATION (a) FIG. NO.	(b) ITEM NO.
C	PBHZZ	4420-600-5437	HEAT EXCHANGER: KEEL COOLING D884N (98396)	AB	EA	2				•	•	•	•	•	31	3
C	XDHZZ		WASHER, FLAT: HEAT EXCHANGER HOSE CONNECTION 26M4-213 (98042)	AB	EA	4									31	4
C	MMHZZ		GASKET: NEOPRENE 26M6-213 (26571) MANUFACTURE FROM:	AB	EA	1									31	5
C	PCHZZ	5330-261-5761	GASKET, AS REQUIRED		SH					•	•	•			31	
	XDHZZ		WASHER, FLAT: HEAT EXCHANGER MTG 26M3-213 (98042)	AB	EA	8									31	6
C	MMHZZ		GASKET: NEOPRENE, 1/8 IN. THK 26M5-213 (26571) MANUFACTURE FROM:	AB	EA	1									31	7
C	PCHZZ	5330-261-5761	GASKET, AS REQUIRED		EA					•	•	•			31	
C	MMHZZ		HOSE CONNECTION, RUBBER: KEEL COOLER VENT MMC16F2 (98042) MANUFACTURE FROM:	AB	EA	1									31	
C	PCHZZ	4720-235-4121	HOSE, AS REQUIRED		FT					•	•	•			31	
N	MMHZZ		WASHER: 2 OD X 3/4 ID X 1/8 IN. THK 209-4510945M3 (80064) MANUFACTURE FROM:	C	EA	8									32	1
N	PAHZZ	9535-231-8256	SHEET, COPPER, 1/8 IN. THK, AS REQUIRED QQC576 (81348)		SH					•	•	•			32	
N	MMHZZ		GASKET: 2 OD X 3/4 ID X 3/16 IN. THK 209-4510945M5 (80064) MANUFACTURE FROM:	C	EA	8									32	2
N	PCHZZ	5330-179-0053	GASKET, NEOPRENE, 3/16 IN. THK, AS REQUIRED MMP151CLASS230R4 (81348)		SH					•	•	•			32	
N	PBHZZ	4420-600-5437	HEAT, EXCHANGER D884N (98396)	C	EA	2				•	•	•	•	•	32	3
N	MMHZZ		WASHER: 4 5/8 OD X 3 ID X 1/8 IN. THK 209-4510945M4 (80064) MANUFACTURE FROM:	C	EA	4									32	4
N	PAHZZ	9535-231-8256	SHEET, COPPER, 1/8 IN. THK, AS REQUIRED QQC576 (81348)		SH					•	•	•			32	
N	MMHZZ		GASKET: 4 5/8 OD X 3 ID X 3/16 IN. THK 209-4510945M6 (80064) MANUFACTURE FROM:	C	EA	4									32	5
N	PCHZZ	5330-179-0053	GASKET, NEOPRENE, 3/16 IN. THK, AS REQUIRED MMP151CLASS230R4 (81348)		SH					•	•	•			32	
	PAHZZ	4730-908-6292	CLAMP: KEEL COOLER VENT HOSE, 3 IN. MS35842-14 (96906)	C	EA	8				•	•	•	•	•	32	6
	MMOZZ		HOSE: KEEL COOLER VENT 145-4510915F2 (80064) MANUFACTURE FROM:	C	EA	2									32	7
	PCOZZ	4720-235-4121	HOSE, RUBBER, 2 3/8 IN. ID, AS REQUIRED ZZHW2BTYPE2GRADEBCLASS1 (81348)		FT		•	•	•	•	•	•	•	•	32	
	XDHZZ		PIPE: HANGER, 1/4 IN. PIPE, 5 IN. LG 145-4510915F7 (80064)		EA	2									32	8
	XDHZZ		HANGER, PIPE: KEEL COOLER VENT HOSE FIG138 (26403)	C	EA	2									32	9

	(1) SMR CODE	(2) FEDERAL STOCK NUMBER	(3) DESCRIPTION REF NUMBER & MFR CODE	USABLE ON CODE	(4) UNIT OF MEAS	(5) QTY INC IN UNIT	(6) 30-DAY DS MAINT ALLOWANCE (a) 1-20	(b) 21-50	(c) 51-100	(7) 30-DAY GS MAINT ALLOWANCE (a) 1-20	(b) 21-50	(c) 51-100	(8) 1-YR ALW PER 100 EQUIP CNTGY	(9) DEPOT MAINT ALW PER 100 EQUIP	(10) ILLUSTRATION (a) FIG. NO.	(b) ITEM NO.
	MHHZZ		VENT, PIPE: KEEL COOLER 145-4510915F12 (80064) MANUFACTURE FROM:	C	EA	2									32	10
	PAHZZ	4710-277-5466	PIPE, STEEL, 2 IN. IPS, 19 1/2 IN. REQUIRED FOR EA PIPE WWP404CLASSA53AERW53BWA53LW (81348)		FT					•	•	•			32	
	XDHZZ		ELBOW: KEEL COOLER VENT 260E21N150LB (14959)	C	EA	2									32	11
	MHHZZ		VENT, PIPE: KEEL COOLER 145-4510915F10 (80064) MANUFACTURE FROM:	C	EA	2									32	12
	PAHZZ	4710-277-5466	PIPE, STEEL, 2 IN. IPS, 7 1/2 IN. REQUIRED FOR EA PIPE WWP404CLASSA53AERW53BWA53LW (81348)		FT					•	•	•			32	
	XDHZZ		REDUCER, PIPE: KEEL COOLER VENT HOSE FIG2639 (26403)	C	EA	2									32	13
	MHHZZ		SCREEN, BRONZE: KEEL COOLER VENT 145-4510915F9 (80064) MANUFACTURE FROM:	C	EA	2									32	14
	PAHZZ	5335-058-5315	SCREEN, BRONZE, 12 X 12 MESH, AS REQUIRED RRW360 (81348)		FT					•	•	•			32	
			GROUP 24 - ENGINE SPEED GOVERNOR													
	PAOZZ	5305-206-6229	SCREW, CAP, HEXAGON HEAD: GOVERNOR TO CYLINDER HEAD, LB, LD ENGINE, 1/4-20 THD SIZE, 1 1/4 IN. LG 186601 (72582)		EA	6	•	•	•	•	•	•	•	•	33	1
	PAOZZ	5305-068-0508	SCREW, CAP, HEXAGON HEAD: GOVERNOR TO CYLINDER HEAD, RD ENGINE, 1/4-20 THD SIZE, 3/4 IN. LG MS90728-6 (96906)		EA	2	•	•	•	•	•	•	•	•	33	1
	PAOZZ	5310-582-9565	WASHER, LOCK: GOVERNOR TO CYLINDER HEAD, 1/4 IN. SCREW SIZE MS35338-44 (96906)		EA	12	•	•	•	•	•	•	•	•	33	2
C	KFOZZ		GASKET: GOVERNOR TO CYLINDER HEAD 5150269 (72582) (PART OF GASKET SET, FSN 5330-379-4301)		EA	16									33	3
R	XDOZZ		SPACER: GOVERNOR TO CYLINDER HEAD 5150512 (72582)		EA	V									33	4
	PAOZZ	5306-613-9396	BOLT, ASSEMBLED WASHER: GOVERNOR TO BLOWER 5118219 (72582)		EA	24	•	•	•	•	•	•	•	•	33	5
R	KFOZZ		GASKET: GOVERNOR TO BLOWER 5150246 (72582) (PART OF GASKET SET, FSN 5330-379-4301)		EA	2									33	6
	PAOZZ	5305-068-0508	SCREW, CAP, HEXAGON HEAD: LEVER, LB, LD AND RD ENGINE, 1/4-20 THD SIZE, 3/4 IN. LG MS90728-6 (96906)		EA	2	•	•	•	•	•	•	•	•	33	7
	PAOZZ	5305-225-3843	SCREW, CAP, HEXAGON HEAD: LEVER, RD ENGINE, 1/4-20 THD SIZE, 1 IN. LG MS90728-8 (96906)		EA	1	•	•	•	•	•	•	•	•	33	7
R	PAOZZ	5310-582-5965	WASHER, LOCK: LEVER SCREW, RD ENGINE, 1/4 IN. SCREW SIZE MS35338-44 (96906)		EA	3	•	•	•	•	•	•	•	•	33	8
	XDOZZ		LEVER, GOVERNOR COVER, SHUTDOWN SHAFT: LB, LD AND RD ENGINE 5183042 (72582)		EA	3									33	9

(1) SMR CODE	(2) FEDERAL STOCK NUMBER	(3) DESCRIPTION REF NUMBER & MFR CODE / USABLE ON CODE	(4) UNIT OF MEAS	(5) QTY INC IN UNIT	(6) 30-DAY DS MAINT ALLOWANCE (a) 1-20	(b) 21-50	(c) 51-100	(7) 30-DAY GS MAINT ALLOWANCE (a) 1-20	(b) 21-50	(c) 51-100	(8) 1-YR ALW PER 100 EQUIP CMTGY	(9) DEPOT MAINT ALW PER 100 EQUIP	(10) ILLUSTRATION (a) FIG. NO.	(b) ITEM NO.
XDOZZ		LEVER, GOVERNOR THROTTLE SHAFT: RB ENGINE 5115970 (72582)	EA	1									33	10
XDOZZ		LEVER, REMOTE CONTROL: GOVERNOR THROTTLE SHAFT, LB, LD AND RD ENGINE 5158432 (72582)	EA	3									33	10
XDOZZ		LEVER ASSEMBLY, PIN: RB ENGINE 5112848 (72582)	EA	1									33	10
PAOZZ	5315-363-8099	PIN, STRAIGHT, HEADLESS: GOVERNOR COVER 5150894 (72582)	EA	1	•	•	•	•	•	•	•	•	33	11
XDOZZ		PIN, STRAIGHT, HEADLESS: LEVER 141195 (72582)	EA	1									33	12
PAOZZ	5360-322-6896	SPRING, LEVER RETURN 5151737 (72582)	EA	1	•	•	•	•	•	•	•	•	33	13
PBOFH	2910-115-3694	GOVERNOR ASSEMBLY: LB ENGINE 5112679 (72582) (COMPONENTS SAME AS GOVERNOR, FSN 2910-110-9508, EXCEPT WHERE INDIVIDUAL COMPONENTS ARE ANNOTATED)	EA	1	•	•	•	•	•	•	•	•	33	
PBOFH	2910-110-9510	GOVERNOR ASSEMBLY: LD ENGINE 5112678 (72582) (COMPONENTS SAME AS GOVERNOR, FSN 2910-110-9508, EXCEPT WHERE INDIVIDUAL COMPONENTS ARE ANNOTATED)	EA	1	•	•	•	•	•	•	•	•	33	
PBOFH	2910-110-9509	GOVERNOR ASSEMBLY: RB ENGINE 5172764 (72582) (COMPONENTS SAME AS GOVERNOR, FSN 2910-110-9508, EXCEPT WHERE INDIVIDUAL COMPONENTS ARE ANNOTATED)	EA	1	•	•	•	•	•	•	•	•	33	
PBOFH	2910-110-9508	GOVERNOR ASSEMBLY: RD ENGINE 5112938 (72582)	EA	1	•	•	•	•	•	•	•	•	33	
R PAOZZ	5365-281-6660	RING, RETAINING: GOVERNOR SHAFT 5174429 (72582)	EA	1	•	•	•	•	•	•	•	•	33	14
PAOZZ	5310-262-5429	WASHER, FLAT 5150941 (72582)	EA	1	•	•	•	•	•	•	•	•	33	15
XDOZZ		CAM, GOVERNOR COVER 5110659 (72582)	EA	1									33	16
C PAOZZ	5305-622-9483	SCREW W/WASHER: FILLISTER HEAD, 1/4-20 THD SIZE, 3/4 IN. LG MS35265-81 (96906)	EA	6	•	•	•	•	•	•	•	•	33	17
R PAOZZ	5310-582-5965	WASHER, LOCK: 1/4 IN. MS35338-44 (96906)	EA	6	•	•	•	•	•	•	•	•	33	18
XDFFF		COVER ASSEMBLY, GOVERNOR: B ENGINE 5110653 (72582) (U/O GOVERNORS, FSN 2910-115-3694 AND 2910-110-9509, ONLY)	EA	2									33	19
XDFFF		COVER ASSEMBLY, GOVERNOR: D ENGINE 5110654 (72582) (U/O GOVERNORS, FSN 2910-110-9510 AND FSN 2910-110-9508, ONLY)	EA	2									33	19
XDFFF		COVER, GOVERNOR ASSEMBLY: B ENGINE, STARBOARD 5113406 (72582) (U/O GOVERNOR, FSN 2910-110-9509, ONLY)	EA	1									33	19
XDFOF		COVER ASSEMBLY, GOVERNOR: PIN, D ENGINE 5110652 (72582) (U/O GOVERNORS, FSN 2910-110-9510 AND 2910-110-9508, ONLY)	EA	1									33	20

(1) SMR CODE	(2) FEDERAL STOCK NUMBER	(3) DESCRIPTION REF NUMBER & MFR CODE / USABLE ON CODE	(4) UNIT OF MEAS	(5) QTY INC IN UNIT	(6) 30-DAY DS MAINT ALLOWANCE (a) 1-20	(b) 21-50	(c) 51-100	(7) 30-DAY GS MAINT ALLOWANCE (a) 1-20	(b) 21-50	(c) 51-100	(8) 1-YR ALW PER 100 EQUIP CNTGY	(9) DEPOT MAINT ALW PER 100 EQUIP	(10) ILLUSTRATION (a) FIG. NO.	(b) ITEM NO.
XDFFF		COVER ASSEMBLY, GOVERNOR: W/PIN, B ENGINE 5110651 (72582) (U/O GOVERNOR, FSN 2910-115-3694, ONLY)	EA	1									33	20
XDFZZ		PIN, STRAIGHT, HEADLESS: 1/4 X 5/8 IN. DOWEL 141199 (72582) (U/O GOVERNORS, FSN 2910-115-3694, 2910-110-9508, AND 2910-110-9510, ONLY)	EA	3									33	21
PCFZZ	5330-450-7483	GASKET: GOVERNOR COVER 5114126 (72582) (U/O GOVERNOR, FSN 2910-110-9509, ONLY)	EA	1	•	•	•	•	•	•	•	•	33	22
C PCFZZ	5330-532-8008	GASKET: GOVERNOR COVER 5150889 (72582) (U/O GOVERNORS, FSN 2910-115-3694, 2910-110-9510 AND 2910-110-9508)	EA	1	•	•	•	•	•	•	•	•	33	22
R PAOZZ	5310-262-3105	WASHER, FLAT: GOVERNOR SHAFT 5153060 (72582)	EA	2	•	•	•	•	•	•	•	•	33	23
PCFZZ	5330-400-5580	SEAL: THROTTLE SHAFT 5115232 (72582) (U/O GOVERNOR, FSN 2910-110-9509, ONLY)	EA	1	•	•	•	•	•	•	•	•	33	24
PCFZZ	4470-514-4804	PACKING, PREFORMED: SEAL, GOVERNOR SHAFT 5182977 (72582)	EA	1	•	•	•	•	•	•	•	•	33	24
C PAFZZ	3110-156-7721	BEARING, ROLLER: GOVERNOR THROTTLE SHAFT MS17131-13 (96906)	EA	8	•	•	•	•	•	•	•	•	33	25
PAFZZ	2910-421-1541	SHAFT ASSEMBLY: THROTTLE 5110661 (72582)	EA	1	•	•	•	•	•	•	•	•	33	26
XAIZZ		PIN, STRAIGHT, HEADLESS: GOVERNOR 5174428 (72582)	EA	1									33	27
PAFZZ	5305-416-3967	SCREW, CAP, HEXAGON HEAD: 5/16-18 THD SIZE, 3 1/2 IN. LG 445520 (72582)	EA	2	•	•	•	•	•	•	•	•	33	28
PAFZZ	5310-407-9566	WASHER, LOCK: 5/16 IN. MS35338-45 (96906)	EA	2	•	•	•	•	•	•	•	•	33	29
R XDFZZ		HOUSING, GOVERNOR: HIGH SPEED SPRING ADJUSTING 5182559 (72582)	EA	1									33	30
R KFFZZ		GASKET: GOVERNOR SPRING COVER 5152944 (72582) (PART OF GASKET SET, FSN 5330-379-4301)	EA	1									33	31
XDFZZ		RETAINER, GOVERNOR: HIGH SPEED SPRING 5182557 (72582)	EA	1									33	32
XDFZZ		LOCKNUT, RING: FUEL MOD, PLUG, RETAINER 5182558 (72582) (U/O GOVERNORS, FSN 2910-110-9509 AND 2910-110-9508, ONLY)	EA	1									33	33
R XDFZZ		LOCKNUT, RING: FUEL MOD, PLUG, RETAINER 5186115 (72582) (U/O GOVERNORS, FSN 2910-115-3694 AND 2910-110-9510, ONLY)	EA	1									33	33
C PAFZZ	5310-297-8836	NUT, PLAIN, HEXAGON: 1/4-28 THD SIZE MILB857TYPE5STYLEAORBGRADE2 (81349)	EA	1	•	•	•	•	•	•	•	•	33	34
C PAFZZ	5315-301-3685	GOVERNOR: LOW SPEED, SPRING ADJUSTING 5182556 (72582)	EA	1	•	•	•	•	•	•	•	•	33	35

(1) SMR CODE	(2) FEDERAL STOCK NUMBER	(3) DESCRIPTION REF NUMBER & MFR CODE / USABLE ON CODE	(4) UNIT OF MEAS	(5) QTY INC IN UNIT	(6) 30-DAY DS MAINT ALLOWANCE (a) 1-20	(b) 21-50	(c) 51-100	(7) 30-DAY GS MAINT ALLOWANCE (a) 1-20	(b) 21-50	(c) 51-100	(8) 1-YR ALW PER 100 EQUIP CNTGY	(9) DEPOT MAINT ALW PER 100 EQUIP	(10) ILLUSTRATION (a) FIG. NO.	(b) ITEM NO.
PAFZZ	5340-420-5952	SPRING, HELICAL COMPRESSION: GOVERNOR, HIGH SPEED 5112719 (75282) (U/O GOVERNORS, FSN 2910-115-3694 AND 2910-110-9510, ONLY)	EA	2	•	•	•	•	•	•	•	•	33	36
PAFZZ	2990-597-8947	SPRING, HELICAL COMPRESSION: GOVERNOR, HIGH SPEED 5182560 (72582) (U/O GOVERNORS, FSN 2910-110-9508 AND 2910-110-9509, ONLY)	EA	2	•	•	•	•	•	•	•	•	33	36
PAFZZ	2815-333-4865	PLUNGER 5182555 (72582)	EA	4	•	•	•	•	•	•	•	•	33	37
XDFZZ		SEAT, GOVERNOR: LOW SPEED SPRING 5150892 (72582)	EA	4									33	38
PAFZZ	2990-691-7917	SPRING, HELICAL COMPRESSION: GOVERNOR, LOW SPEED 5183704 (72582)	EA	4	•	•	•	•	•	•	•	•	33	39
XDFZZ		RETAINER, GOVERNOR: LOW SPRING 5150899 (72582)	EA	4									33	40
PAFZZ	2990-354-1405	SCREW W/SPRING: GOVERNOR BUFFER 5177083 (72582)	EA	4	•	•	•	•	•	•	•	•	33	41
C PAFZZ	5310-975-2075	NUT, PLAIN, HEXAGON: 3/8-24 THD SIZE MS35691-21 (96906)	EA	4	•	•	•	•	•	•	•	•	33	42
C PAFZZ	5305-958-0599	SCREW, MACHINE: 5/16-24 THD SIZE, 3/8 IN. LG MS35207-292 (96906) (U/O GOVERNOR, FSN 2910-115-3694, ONLY)	EA	1	•	•	•	•	•	•	•	•	33	43
PCFZZ	5330-285-3444	GASKET: COPPER, 5/16 IN. 114622 (72582) (U/O GOVERNOR, FSN 2910-115-3694, ONLY)	EA	1	•	•	•	•	•	•	•	•	33	44
XDFZZ		PIN, STRAIGHT, HEADLESS: HOUSING 141195 (72582)	EA	8									33	45
PAFZZ	5340-014-2583	RETAINER, LEVER ASSEMBLY: 13/64 IN. 142583 (72582)	EA	4	•	•	•	•	•	•	•	•	33	46
PAFZZ	5310-262-5429	WASHER, FLAT: LEVER ASSEMBLY 5150941 (72582)	EA	4	•	•	•	•	•	•	•	•	33	47
C XDFZZ		PIN, STRAIGHT, HEADLESS: 1/4 IN. DIA, 3/32 IN. LG 5110648 (72582)	EA	4									33	48
PAFZZ	2910-420-8926	LEVER ASSEMBLY: GOVERNOR, DIFFERENTIAL 5110666 (72582)	EA	4	•	•	•	•	•	•	•	•	33	49
PAFZZ	2990-363-8109	SHAFT ASSEMBLY: GOVERNOR CONTROL 5158819 (72582) (INCLUDES SAME COMPONENTS AS SHAFT, FSN 2990-126-9646, EXCEPT WHERE ANNOTATED) (U/O GOVERNORS, FSN 2910-115-3694 AND 2910-110-9509, ONLY)	EA	2	•	•	•	•	•	•	•	•	33	50
PAFZZ	2990-126-9646	SHAFT ASSEMBLY: GOVERNOR OPERATING 5158820 (72582) (U/O GOVERNORS, FSN 2910-110-9510 AND 2910-110-9508, ONLY)	EA	2	•	•	•	•	•	•	•	•	33	50
PAFZZ	2990-363-8110	SHAFT ASSEMBLY: GOVERNOR OPERATING 5154437 (72582) (U/O SHAFT, FSN 2990-363-8109, ONLY)	EA	2	•	•	•	•	•	•	•	•	33	51
PAFZZ	2990-363-8112	SHAFT ASSEMBLY: GOVERNOR 5154438 (72582) (U/O SHAFT, FSN 2990-126-9646, ONLY)	EA	2	•	•	•	•	•	•	•	•	33	51

(1) SMR CODE	(2) FEDERAL STOCK NUMBER	(3) DESCRIPTION REF NUMBER & MFR CODE / USABLE ON CODE	(4) UNIT OF MEAS	(5) QTY INC IN UNIT	(6) 30-DAY DS MAINT ALLOWANCE (a) 1-20	(b) 21-50	(c) 51-100	(7) 30-DAY GS MAINT ALLOWANCE (a) 1-20	(b) 21-50	(c) 51-100	(8) 1-YR ALW PER 100 EQUIP CNTGY	(9) DEPOT MAINT ALW PER 100 EQUIP	(10) ILLUSTRATION (a) FIG. NO.	(b) ITEM NO.
PAFZZ	2990-363-8095	BELL CRANK: GOVERNOR SHAFT 5154403 (72582) (INCLUDES SAME COMPONENTS AS BELL CRANK, FSN 2990-354-1213) (U/O SHAFT, FSN 2990-363-8110, ONLY)	EA	2	•	•	•	•	•	•	•	•	33	52
PAFZZ	2990-354-1213	BELL CRANK: GOVERNOR 5154422 (72582) (U/O SHAFT, FSN 2990-363-8112, ONLY)	EA	2	•	•	•	•	•	•	•	•	33	52
PAFZZ	5305-276-8024	SETSCREW: GAP ADJUSTING 5150898 (72582)	EA	4	•	•	•	•	•	•	•	•	33	53
C PAFZZ	5310-297-8836	NUT, PLAIN, HEXAGON: 1/4-28 THD SIZE MIL8857TYPE5STYLEAORBGRADEE2 (81349)	EA	4	•	•	•	•	•	•	•	•	33	54
XDFZZ		PIN, STRAIGHT, HEADLESS: GOVERNOR 5150943 (72582)	EA	4									33	55
PAFZZ	5305-899-2109	SCREW, LOCKWASHER ASSEMBLY 9421917 (72582)	EA	8	•	•	•	•	•	•	•	•	33	56
PAFZZ	5310-595-6509	WASHER, FLAT: NO. 10 FFW92TYPEAGRADE1CLASSA (81348)	EA	4	•	•	•	•	•	•	•	•	33	57
PAFZZ	3110-071-6402	BEARING, GOVERNOR: OPERATING SHAFT, UPPER 457193 (72582)	EA	4	•	•	•	•	•	•	•	•	33	58
XDFZZ		WASHER, FLAT: BEARING, SEAT 5159080 (72582)	EA	4									33	59
PAFZZ	2990-600-6713	SHAFT, GOVERNOR 5154435 (72582)	EA	4	•	•	•	•	•	•	•	•	33	60
PAFZZ	2990-149-1803	FORK, GOVERNOR SHAFT 5185605 (72582)	EA	4	•	•	•	•	•	•	•	•	33	61
PAFZZ	5330-724-5815	SETSCREW: FORK TO SHAFT 139013 (72582)	EA	4	•	•	•	•	•	•	•	•	33	62
PAFZZ	5340-050-1515	PLUG, EXPANSION: 3/4 IN. 142656 (72582)	EA	4	•	•	•	•	•	•	•	•	33	63
PAFZZ	2990-593-1743	BUSHING, GOVERNOR SHAFT: LOWER 5188611 (72582)	EA	4	•	•	•	•	•	•	•	•	33	64
C AAFZZ		HOUSING, GOVERNOR CONTROL 5183313 (72582) (U/O GOVERNORS, FSN 2910-115-3694 AND 2910-110-9509, ONLY)	EA	1									33	65
C XAFZZ		HOUSING ASSEMBLY, GOVERNOR: THROTTLE CONTROL 5179110 (72582) (U/O GOVERNOR, FSN 2910-110-9509, ONLY)	EA	1									33	65
C XAFZZ		HOUSING, GOVERNOR CONTROL 5183314 (72582) (U/O GOVERNORS, FSN 2910-110-9510 AND 2910-110-9508, ONLY)	EA	1									33	65
PAFZZ	5305-019-0910	SCREW, CAP, HEXAGON HEAD: COVER MTG, 1/4-20 THD SIZE, 2 3/8 IN. LG 190910 (72582)	EA	4	•	•	•	•	•	•	•	•	33	66
R PAFZZ	5310-582-5965	WASHER, LOCK: COVER MTG, 1/4 IN. SCREW SIZE MS35338-44 (96906)	EA	4	•	•	•	•	•	•	•	•	33	67
XDFZZ		COVER: GOVERNOR WEIGHT HOUSING 5176837 (72582)	EA	1									33	68
R KFFZZ		GASKET: GOVERNOR WEIGHT HOUSING COVER 5150890A (72582) (PART OF GASKET SET, FSN 5330-379-4301)	EA	8									33	69

	(1) SMR CODE	(2) FEDERAL STOCK NUMBER	(3) DESCRIPTION — REF NUMBER & MFR CODE / USABLE ON CODE	(4) UNIT OF MEAS	(5) QTY INC IN UNIT	(6) 30-DAY DS MAINT ALLOWANCE (a) 1-20	(b) 21-50	(c) 51-100	(7) 30-DAY GS MAINT ALLOWANCE (a) 1-20	(b) 21-50	(c) 51-100	(8) 1-YR ALW PER 100 EQUIP CNTGY	(9) DEPOT MAINT ALW PER 100 EQUIP	(10) ILLUSTRATION (a) FIG. NO.	(b) ITEM NO.
	PAFZZ	2990-416-3969	SHAFT AND CARRIER ASSEMBLY 5174453 (72582)	EA	2	•	•	•	•	•	•	•	•	33	70
C	PAFZZ	2990-385-1785	SHAFT, GOVERNOR 5150925 (72582)	EA	1	•	•	•	•	•	•	•	•	33	71
	PAFZZ	2910-421-1542	CARRIER AND WEIGHT ASSEMBLY 5111978 (72582) (U/O GOVERNORS, FSN 2910-215-3694, 2910-110-9509 AND 2910-110-9508, ONLY)	EA	1	•	•	•	•	•	•	•	•	33	72
	PAFZZ	2990-416-3957	CARRIER AND WEIGHT ASSEMBLY 5174449 (72582) (U/O GOVERNOR, FSN 2910-110-9509, ONLY)	EA	1	•	•	•	•	•	•	•	•	33	72
R	PAFZZ	5365-205-5139	RING, RETAINING: WEIGHT PIN 5178581 (72582)	EA	4	•	•	•	•	1 •	•	•	•	33	73
	XAFZZ		PIN, GROOVED, HEADLESS: GOVERNOR WEIGHT 5185154 (72582)	EA	4									33	74
	XDFZZ		WASHER, FLAT: GOVERNOR WEIGHT PIN 5151487 (72582)	EA	8									33	75
	PAFZZ	2815-416-3972	WEIGHT ASSEMBLY: W/BEARING 5174455 (72582) (U/O GOVERNORS, FSN 2910-110-9509 AND 2910-110-9508, ONLY)	EA	2	•	•	•	•	•	•	•	•	33	76
	PAFZZ	2815-927-1051	WEIGHT ASSEMBLY: W/BEARING 5111979 (72582) (U/O GOVERNORS, FSN 2910-115-3694 AND 2910-110-9510, ONLY)	EA	2	•	•	•	•	•	•	•	•	33	76
R	XAFZZ		BEARING, ROLLER: GOVERNOR WEIGHT MS17131-9 (96906)	EA	8									33	77
	XAFZZ		WEIGHT, GOVERNOR 5174456 (72582) (U/O GOVERNORS, FSN 2910-110-9509 AND 2910-110-9508, ONLY)	EA	1									33	78
	XAFZZ		WEIGHT, GOVERNOR 5111980 (72582) (U/O GOVERNORS, FSN 2910-115-3694 AND 2910-110-9510, ONLY)	EA	1									33	78
	XAFZZ		CARRIER: GOVERNOR WEIGHT 5185606 (72582)	EA	4									33	79
	PAFZZ	2990-363-8103	RISER: GOVERNOR WEIGHT 5154503 (72582)	EA	4	•	•	•	•	•	•	•	•	33	80
	PAFZZ	2990-363-8080	CAP: GOVERNOR WEIGHT 5183268 (72582)	EA	4	•	•	•	•	•	•	•	•	33	81
C	PAFZZ	5330-599-1616	WASHER, FLAT: GOVERNOR WEIGHT 5165221 (72582)	EA	4	•	•	•	•	•	•	•	•	33	82
	PAFZZ	5306-273-6337	BOLT, MACHINE, SCREW: BEARING RETAINER 5150884 (72582)	EA	4	•	•	•	•	•	•	•	•	33	83
	PAFZZ	5310-274-9232	WASHER, KEY: BEARING RETAINER SCREW 5150897 (72582)	EA	4	•	•	•	•	•	•	•	•	33	84
C	PAFZZ	3110-726-3110	BEARING, BALL H203011U9 (43334)	EA	4	•	•	•	•	•	•	•	•	33	85
C	PAFZZ	3110-156-1854	BEARING, BALL, THRUST 451905 (72582)	EA	4	•	•	•	•	•	•	•	•	33	86
	XDFZZ		HOUSING, GOVERNOR WEIGHT 5183286 (72582)	EA	4									33	87

(1)	(2)	(3)	(4)	(5)	(6)			(7)			(8)	(9)	(10)	
					30-DAY DS MAINT ALLOWANCE			30-DAY GS MAINT ALLOWANCE					ILLUSTRATION	
		DESCRIPTION			(a)	(b)	(c)	(a)	(b)	(c)	1-YR ALW PER 100 EQUIP CNTGY	DEPOT MAINT ALW PER 100 EQUIP	(a)	(b)
SMR CODE	FEDERAL STOCK NUMBER	REF NUMBER & MFR CODE / USABLE ON CODE	UNIT OF MEAS	QTY INC IN UNIT	1-20	21-50	51-100	1-20	21-50	51-100			FIG. NO.	ITEM NO.
C XDFZZ		PIN, STRAIGHT, HEADLESS: DOWEL HOUSING AN150280 (88044)	EA	2									33	88
PAFZZ	5365-205-5139	RING, RETAINING, CAM: GOVERNOR COVER 5178581 (72582)	EA	1	•	•	•	•	•	•	•	•	33	
PAFZZ	5310-188-5171	WASHER, FLAT: CAM, GOVERNOR COVER 5151487 (72582)	EA	2	•	•	•	•	•	•	•	•	33	
PAFZZ	5340-014-2583	RETAINER: GOVERNOR COVER 142583 (72582)	EA	1	•	•	•	•	•	•	•	•	33	
PAFZZ	2910-420-8923	HELICAL COIL: HOUSING, 1/4-20 THD SIZE, 3/8 IN. LG 452644 (72582)	EA	1	•	•	•	•	•	•	•	•	33	
C PAFZZ	5315-839-2325	PIN, COTTER: 1/16 X 3/8 IN. MS24665-132 (96906) (U/O GOVERNOR, FSN 2910-110-9509, ONLY)	EA	1	•	•	•	•	•	•	•	•	33	
C PAFZZ	5305-922-5722	SCREW, CAP, THUMB: 1/4-20 THD SIZE 5115231 (72582) (U/O GOVERNOR, FSN 2910-110-9509, ONLY)	EA	1	•	•	•	•	•	•	•	•	33	
C PAFZZ	2910-494-3015	FITTING, HUB 273347 (72582) (U/O GOVERNOR, FSN 2910-110-9509, ONLY)	EA	1	•	•	•	•	•	•	•	•	33	
C PAFZZ		STUD, PLAIN: 1/4-20 X 1 3/8 IN. LG 173362 (72582) (U/O GOVERNOR, FSN 2910-110-9509, ONLY)	EA	1	•	•	•	•	•	•	•	•	33	
C PAFZZ	5305-808-9977	SCREW, CAP, HEXAGON HEAD: 1/4-20 THD SIZE, 1 IN. LG MS35265-83 (96906) (U/O GOVERNOR, FSN 2910-110-9509, ONLY)	EA	4	•	•	•	•	•	•	•	•	33	
C PAFZZ	5310-809-4058	WASHER, FLAT: 1/4 IN. MS27183-10 (96906) (U/O GOVERNOR, FSN 2910-110-9509, ONLY)	EA	2	•	•	•	•	•	•	•	•	33	
C PAFZZ	5310-582-9565	WASHER, LOCK: 1/4 IN. MS35338-44 (96906) (U/O GOVERNOR, FSN 2910-110-9509, ONLY)	EA	1	•	•	•	•	•	•	•	•	33	
C PAFZZ	5310-063-6716	NUT, WING: 1/4-28 THD SIZE 219210 (72582) (U/O GOVERNOR, FSN 2910-110-9509, ONLY)	EA	1	•	•	•	•	•	•	•	•	33	
C PAFZZ	8815-158-6233	PLUG, PIPE: 1/8 IN. PIPE 5145009 (72582)	EA	1	•	•	•	•	•	•	•	•	33	
C PAFZZ	5315-051-9867	PIN, TAPERED, HEADLESS: NO. 1, 7/8 IN. TAPER 113500 (72582)	EA	1	•	•	•	•	•	•	•	•	33	
C PBFFF	2910-420-8925	HOUSING ASSEMBLY, GOVERNOR CONTROL 5110753 (72582) (U/O GOVERNORS, FSN 2910-115-3694 AND 2910-110-9509)	EA	1	•	•	•	•	•	•	•	•	33	
C PBFFF	2910-435-4472	HOUSING ASSEMBLY, GOVERNOR CONTROL 5110754 (72582) (U/O GOVERNORS, FSN 2910-110-9510 AND 2910-110-9508)	EA	1	•	•	•	•	•	•	•	•	33	
C PAFZZ	5315-597-4217	PIN, STRAIGHT, HEADLESS: WEIGHT ASSEMBLY AN150280 (88044)	EA	2	•	•	•	•	•	•	•	•	33	

(1) SMR CODE	(2) FEDERAL STOCK NUMBER	(3) DESCRIPTION REF NUMBER & MFR CODE / USABLE ON CODE	(4) UNIT OF MEAS	(5) QTY INC IN UNIT	(6) 30-DAY DS MAINT ALLOWANCE (a) 1-20	(b) 21-50	(c) 51-100	(7) 30-DAY GS MAINT ALLOWANCE (a) 1-20	(b) 21-50	(c) 51-100	(8) 1-YR ALW PER 100 EQUIP CNTGY	(9) DEPOT MAINT ALW PER 100 EQUIP	(10) ILLUSTRATION (a) FIG. NO.	(b) ITEM NO.
C XAFZZ		HOUSING AND WEIGHT ASSEMBLY, GOVERNOR 5111976 (72582) (U/O GOVERNORS, FSN 2910-115-3694 AND 2910-110-9510, ONLY)	EA	1									33	
C PAFZZ	2990-416-3969	SHAFT AND CARRIER ASSEMBLY 5174453 (72582)	EA	1	•	•	•	•	•	•	•	•	33	
PAOZZ	5310-012-6189	NUT, PLAIN, HEXAGON: THROTTLE ROD, 3/8-24 THD SIZE 126189 (72582)	EA	4	•	•	•	•	•	•	•	•	33	
C PAOZZ	5310-732-0559	NUT, PLAIN, HEXAGON: THROTTLE ROD, 3/8-24 THD SIZE MS51968-8 (96906)	EA	8	•	•	•	•	•	•	•	•	33	
R KFOZZ		GASKET: GOVERNOR BREATHER HOLE COVER 5150900 (72582) (PART OF GASKET SET, FSN 5330-379-4301)	EA	2									33	
PAFZZ	5305-614-0245	SCREW, MACHINE: GOVERNOR COVER, NO. 10-24 THD SIZE, 5/8 IN. LG 132046 (72582)	EA	4	•	•	•	•	•	•	•	•	33	
PAFZZ	5305-614-0274	SCREW, MACHINE: GOVERNOR COVER, NO. 10-24 THD SIZE, 1/2 IN. LG MS35265-63 (96906)	EA	4	•	•	•	•	•	•	•	•	33	
C PAFZZ	2815-922-2017	WASHER, LOCK: GOVERNOR COVER, NO. 10 SCREW SIZE 120217 (72582)	EA	8	•	•	•	•	•	•	•	•	33	
PAOZZ	5310-407-9566	WASHER, LOCK: GOVERNOR SHUTDOWN LEVER, 5/16 IN. SCREW SIZE MS35338-45 (96906)	EA	1	•	•	•	•	•	•	•	•	33	
PAOZZ	5315-492-4320	PIN, STRAIGHT, HEADLESS: THROTTLE SHAFT 5115971 (72582)	EA	1	•	•	•	•	•	•	•	•	33	
PAOZZ	5305-225-3843	SCREW, CAP, HEXAGON HEAD: THROTTLE SHAFT LEVER MS90728-8 (96906)	EA	2	•	•	•	•	•	•	•	•	33	
C PAOZZ	5310-515-9627	WASHER, FLAT: THROTTLE SHAFT LEVER 50-4-16-17-7 (38597)	EA	1	•	•	•	•	•	•	•	•	33	
R PAOZZ	5310-582-5965	WASHER, LOCK: THROTTLE SHAFT LEVER, 1/4 IN. SCREW SIZE MS35338-44 (96906)	EA	2	•	•	•	•	•	•	•	•	33	
PAOZZ	2815-621-3932	TUBE ASSEMBLY: GOVERNOR BEARING LUBRICATION 5183994 (72582)	EA	3	•	•	•	•	•	•	•	•	33	
PAOZZ	2990-333-4862	TUBE ASSEMBLY: GOVERNOR BEARING LUBRICATION 5176834 (72582)	EA	1	•	•	•	•	•	•	•	•	33	
PAOZZ	4730-522-2252	ELBOW, RESTRICTION: GOVERNOR BEARING LUBRICATION 5166265 (72582)	EA	2	•	•	•	•	•	•	•	•	33	
C PAOZZ	4730-277-8643	ELBOW: GOVERNOR BEARING LUBRICATION 4348X8 (79470)	EA	2	•	•	•	•	•	•	•	•	33	
PAOZZ	4730-277-7611	ELBOW, PIPE: GOVERNOR LUBE LINE 5177752 (72582)	EA	1	•	•	•	•	•	•	•	•	33	
PAOZZ	4730-580-2612	ADAPTER, STRAIGHT: GOVERNOR BEARING LUBRICATION 137405 (72582)	EA	2	•	•	•	•	•	•	•	•	33	
PCOZZ	5330-449-6483	SEAL, PLAIN, ENCASED: GOVERNOR 596330 (72582)	EA	4	•	•	•	•	•	•	•	•	33	
PAOZZ	5340-999-0317	SCREW, HOLDER, SPRING 5126792 (72582)	EA	2	•	•	•	•	•	•	•	•	33	

(1) SMR CODE	(2) FEDERAL STOCK NUMBER	(3) DESCRIPTION REF NUMBER & MFR CODE	USABLE ON CODE	(4) UNIT OF MEAS	(5) QTY INC IN UNIT	(6) 30-DAY DS MAINT ALLOWANCE (a) 1-20	(b) 21-50	(c) 51-100	(7) 30-DAY GS MAINT ALLOWANCE (a) 1-20	(b) 21-50	(c) 51-100	(8) 1-YR ALW PER 100 EQUIP CNTGY	(9) DEPOT MAINT ALW PER 100 EQUIP	(10) ILLUSTRATION (a) FIG. NO.	(b) ITEM NO.
		GROUP 25 - BLOWER ASSEMBLY													
PAFHH	2815-673-5498	BLOWER ASSEMBLY, LD-RD ENGINE 5120993 (72582) (COMPONENTS SAME AS BLOWER ASSEMBLY, FSN 2815-673-5503)		EA	2	*	*	*	*	*	*	*	*	34	
PAFHH	2815-673-5503	BLOWER ASSEMBLY, LB-RD ENGINE 5120996 (72582)		EA	2	*	*	*	*	*	*	*	*	34	
C PAHZZ	5305-225-8506	SCREW, CAP, HEXAGON HEAD: END COVER MTG, 5/16-18 THD SIZE, 2 1/2 IN. LG MS90725-42 (96906)		EA	40				*	*	*	*	*	34	1
PAHZZ	5310-407-9566	WASHER, LOCK: END COVER MTG, 5/16 IN. SCREW SIZE MS35338-45 (96906)		EA	40				*	*	*	*	*	34	2
C XBHZZ		COVER: END PLATE, FRONT 5114442 (72582)		EA	4									34	3
C KFHZZ		GASKET: BLOWER, END PLATE 5114726 (72582) (PART OF KIT, FSN 2815-428-9722)		EA	4									34	4
PAHZZ	5305-274-2649	SCREW, CAP, HEXAGON HEAD: COUPLING MTG, 5/16-24 THD SIZE, 1 1/2 IN. LG 138234 (72582)		EA	4				*	*	*	*	*	34	5
PAHZZ	2930-876-6768	COUPLING, BLOWER TO WATER PUMP 5122069 (72582)		EA	4				*	*	*	*	*	34	6
PAHZZ	5305-068-0508	SCREW, CAP, HEXAGON HEAD: BEARING RETAINER, 1/4-20 THD SIZE, 3/4 IN. LG MS90728-6 (96906)		EA	12				*	*	*	*	*	34	7
PAHZZ	5310-582-5965	WASHER, LOCK: BEARING RETAINER, 1/4 IN. SCREW SIZE MS35338-44 (96906)		EA	12				*	*	*	*	*	34	8
PAHZZ	5305-068-0508	SCREW, CAP, HEXAGON HEAD: BEARING RETAINER, 1/4-20 THD SIZE, 3/4 IN. LG MS90728-6 (96906)		EA	12				*	*	*	*	*	34	9
PAHZZ	5310-582-5965	WASHER, LOCK: BEARING RETAINER, 1/4 IN. SCREW SIZE MS35338-44 (96906)		EA	12				*	*	*	*	*	34	10
R PAHZZ	5330-641-1457	RETAINER: FRONT AND REAR PACKING 5179017 (72582)		EA	4				*	*	*	*	*	34	11
KFHZZ		BEARING, ROLLER, ROTOR FRONT 7451054 (72582) (PART OF KIT, FSN 2815-428-9722)		EA	8									34	12
PAHZZ	5305-579-5818	SCREW, MACHINE: PLATE MTG, 5/16-18 THD SIZE, 1 1/2 IN. LG 117296 (72582)		EA	8				*	*	*	*	*	34	13
XBHZZ		PLATE ASSEMBLY 5193719 (72582)		EA	4									34	14
XBHZZ		PIN, STRAIGHT, HEADLESS: PLATE ASSEMBLY 5114528 (72582)		EA	8									34	15
KFHZZ		SEAL, PLAIN, ENCASED: END PLATE 5150220 (72582) (PART OF KIT, FSN 2815-428-9722)		EA	8									34	16

	(1) SMR CODE	(2) FEDERAL STOCK NUMBER	(3) DESCRIPTION REF NUMBER & MFR CODE	USABLE ON CODE	(4) UNIT OF MEAS	(5) QTY INC IN UNIT	(6) 30-DAY DS MAINT ALLOWANCE (a) 1-20	(b) 21-50	(c) 51-100	(7) 30-DAY GS MAINT ALLOWANCE (a) 1-20	(b) 21-50	(c) 51-100	(8) 1-YR ALW PER 100 EQUIP CNTGY	(9) DEPOT MAINT ALW PER 100 EQUIP	(10) ILLUSTRATION (a) FIG. NO.	(b) ITEM NO.
	PAHZZ	5305-225-8506	SCREW, CAP, HEXAGON HEAD: END COVER MTG, 5/16-18 THD SIZE, 2 1/2 IN. LG MS90725-42 (96906)		EA	40				*	*	*	*	*	34	17
	PAHZZ	5310-407-9566	WASHER, LOCK: END COVER MTG, 5/16 IN. SCREW SIZE MS35338-45 (96906)		EA	40				*	*	*	*	*	34	18
C	XBHZZ		COVER, END PLATE: REAR 5120726 (72582)		EA	4									34	19
	KFHZZ		GASKET: BLOWER, END PLATE 5114726 (72582) (PART OF KIT, FSN 2815-428-9722)		EA	4									34	20
	PAHZZ	2815-428-9720	HUB KIT, ROTOR DRIVE 5192751 (72582)		EA	4				*	*	*	*	*	34	
C	KFHZZ		HUB, GEAR, ROTOR DRIVE 5173366 (72582)		EA	4									34	21
C	KFHZZ		BOLT, EXTERNALLY RELIEVED 5173363 (72582)		EA	12									34	22
	KFHZZ		WASHER, LOCK: 5/16 IN. MS35338-45 (96906)		EA	12									34	23
C	KFHZZ		WASHER, FLAT: 5/16 IN. 120393 (72582)		EA	12									34	24
C	KFHZZ		PLATE, RETAINING SHAFT 5173365 (72582)		EA	8									34	25
	KFHZZ		BOLT, EXTERNALLY RELIEVED 5173362 (72582)		EA	12									34	26
	PAHZZ	5310-407-9566	WASHER, LOCK: PLATE MTG, 5/16 IN. SCREW SIZE MS35338-45 (96906)		EA	12				*	*	*	*	*	34	27
	KFHZZ		WASHER, FLAT: PLATE MTG, 5/16 IN. SCREW SIZE 120393 (72582)		EA	12									34	28
	KFHZZ		SPACER, SLEEVE, HUB 5173364 (72582)		EA	12									34	29
C	PAHZZ	5305-761-4227	SCREW, CAP, HEXAGON HEAD: GEAR RETAINING MS90726-111 (96906)		EA	8				*	*	*	*	*	34	30
	PAHZZ	5310-264-1888	WASHER, KEY: GEAR RETAINING SCREW 5154398 (72582)		EA	8				*	*	*	*	*	34	31
	PAHZZ	5310-639-4037	WASHER, KEY: ROTOR GEAR RETAINER 5154400 (72582)		EA	4				*	*	*	*	*	34	32
	PAHZZ	2815-364-3424	DISC, ROTOR, FUEL: PM COUPLING 5154401 (72582)		EA	4				*	*	*	*	*	34	33
	PAHZZ	2815-119-2944	GEAR SET, BLOWER: ROTOR 5192234 (72582)		EA	4				*	*	*	*	*	34	34
	PAHZZ	5305-068-0508	SCREW, CAP, HEXAGON HEAD: BEARING RETAINER, 1/4-20 THD SIZE, 3/4 IN. LG		EA	24				*	*	*	*	*	34	35
	PAHZZ	5310-582-5965	WASHER, LOCK: BEARING RETAINER, 1/4 IN. SCREW SIZE MS35338-44 (96906)		EA	12				*	*	*	*	*	34	36
C	PAHZZ	5340-597-7422	SHIM: .002 IN. THK 5150372 (72582)		EA	V				*	*	*	*	*	34	37
C	KFHZZ		SHIM: .003 IN. THK 5153938 (72582) (PART OF KIT, FSN 2815-428-9722)		EA	V									34	37

(1) SMR CODE	(2) FEDERAL STOCK NUMBER	(3) DESCRIPTION REF NUMBER & MFR CODE	USABLE ON CODE	(4) UNIT OF MEAS	(5) QTY INC IN UNIT	(6) 30-DAY DS MAINT ALLOWANCE (a) 1-20	(b) 21-50	(c) 51-100	(7) 30-DAY GS MAINT ALLOWANCE (a) 1-20	(b) 21-50	(c) 51-100	(8) 1-YR ALW PER 100 EQUIP CNTGY	(9) DEPOT MAINT ALW PER 100 EQUIP	(10) ILLUSTRATION (a) FIG. NO.	(b) ITEM NO.
C KFHZZ		SHIM: .005 IN. THK 5150855 (72582) (PART OF KIT, FSN 2815-428-9722)		EA	V									34	37
C KFHZZ		SHIM: .010 IN. THK 5150856 (72582) (PART OF KIT, FSN 2815-428-9722)		EA	V									34	37
PAHZZ	5330-641-1457	RETAINER: FRONT AND REAR PACKING 5179017 (72582)		EA	4				*	*	*	*	*	34	38
PAHZZ	3110-183-6912	BEARING, BALL: ROTOR, REAR 954418 (72582)		EA	8				*	*	*	*	*	34	39
PAHZZ	5305-579-5818	SCREW, MACHINE: PLATE MTG, 5/16-18 THD SIZE, 1 1/2 IN. LG 117296 (72582)		EA	8				*	*	*	*	*	34	40
PAHZZ	5315-775-1850	PIN, STRAIGHT, HEADLESS: PLATE ASSEMBLY 5114528 (72582)		EA	8				*	*	*	*	*	34	41
PAHZZ	2815-612-3111	PLATE ASSEMBLY 5193719 (72582)		EA	4				*	*	*	*	*	34	42
KFHZZ		SEAL, PLAIN, ENCASED: END PLATE 5150220 (72582) (PART OF KIT, FSN 2815-428-9722)		EA	8									34	43
PAHZZ	2815-328-5376	ROTOR ASSEMBLY: BLOWER, UPPER RH 5157232 (72582) (COMPONENTS SAME AS ROTOR ASSEMBLY, FSN 2815-379-4290)		EA	4				*	*	*	*	*	34	44
PAHZZ	2815-379-4290	ROTOR ASSEMBLY: BLOWER, LOWER RH 5179049 (72582)		EA	4				*	*	*	*	*	34	45
XAHZZ		SHAFT ASSEMBLY: W/PLUG 5179046 (72582)		EA	4									34	46
XAHZZ		PLUG, EXPANSION: SHAFT ASSEMBLY 5165289 (72582)		EA	4									34	
XAHZZ		PIN, GROOVED: 1/4 IN. DIA, 1 1/4 IN. LG 142522 (72582)		EA	4									34	
XDHZZ		HOUSING, BLOWER 5111715 (72582)		EA	4									34	47
PAFZZ	5305-042-9477	SCREW, CAP, HEXAGON HEAD: BLOWER MTG, 7/16-14 THD SIZE, 2 IN. LG 179866 (72582)		EA	32	*	*	*	*	*	*	*	*	35	1
PAFZZ	5310-576-2544	WASHER, FLAT: BLOWER MTG, 7/16 IN. SCREW SIZE 5150238 (72582)		EA	32	*	*	*	*	*	*	*	*	35	2
C KFFZZ		GASKET: BLOWER MTG 5115656 (72582) (PART OF KIT, FSN 2815-511-2639)		EA	4									35	3
PAFZZ	4730-632-3421	CLAMP, BLOWER: COVER PACKING 5138336 (72582)		EA	4	*	*	*	*	*	*	*	*	35	4
C KFFZZ		WASHER, NONMETALLIC: BLOWER COVER 5172865 (72582) (PART OF KIT, FSN 2815-511-2639)		EA	2									35	5
C XBFZZ		COVER, TUBE: BLOWER, ROTOR 5118353 (72582)		EA	4									35	6

(1) SMR CODE	(2) FEDERAL STOCK NUMBER	(3) DESCRIPTION — REF NUMBER & MFR CODE / USABLE ON CODE	(4) UNIT OF MEAS	(5) QTY INC IN UNIT	(6) 30-DAY DS MAINT ALLOWANCE (a) 1-20	(b) 21-50	(c) 51-100	(7) 30-DAY GS MAINT ALLOWANCE (a) 1-20	(b) 21-50	(c) 51-100	(8) 1-YR ALW PER 100 EQUIP CNTGY	(9) DEPOT MAINT ALW PER 100 EQUIP	(10) ILLUSTRATION (a) FIG. NO.	(b) ITEM NO.
PAFZZ	5306-613-9396	BOLT, ASSEMBLED: W/WASHER SEAL, COVER TUBE MTG 5118219 (72582)	EA	24	*	*	*	*	*	*	*	*	35	7
C KFFZZ		GASKET: HUB SUPPORT 5150286 (72582) (PART OF KIT, FSN 2815-511-2639)	EA	2									35	8
PAFZZ	5310-275-5489	NUT, PLAIN, HEXAGON: BLOWER DRIVE 5152804 (72582)	EA	4	*	*	*	*	*	*	*	*	35	9
PAFZZ	5310-274-9233	WASHER, KEY: DRIVE GEAR 5150281 (72582)	EA	4	*	*	*	*	*	*	*	*	35	10
PAFZZ	2815-886-6105	WASHER, THRUST: HUB BEARING 5122529 (72582)	EA	4	*	*	*	*	*	*	*	*	35	11
PAFZZ	5305-269-2802	SCREW, CAP, HEXAGON HEAD: BEARING SUPPORT MTG, 3/8-24 THD SIZE, 7/8 IN. LG MS90726-59 (96906)	EA	16	*	*	*	*	*	*	*	*	35	12
PAFZZ	5310-637-9541	WASHER, LOCK: BEARING SUPPORT MTG, 3/8 IN. SCREW SIZE MS35338-46 (96906)	EA	16	*	*	*	*	*	*	*	*	35	13
PAFZZ	2815-886-6104	SUPPORT ASSEMBLY 5122528 (72582) (INCLUDES BEARING)	EA	4	*	*	*	*	*	*	*	*	35	14
PAFZZ	2815-886-6106	BEARING, SLEEVE: HUB SUPPORT 5122530 (72582)	EA	16	*	*	*	*	*	*	*	*	35	15
R PAFZZ	5365-281-6954	RING, RETAINING: BLOWER DRIVE 5167727 (72582)	EA	2	*	*	*	*	*	*	*	*	35	16
PAFZZ	2815-364-3092	SHAFT: BLOWER DRIVE 5193476 (72582)	EA	4	*	*	*	*	*	*	*	*	35	17
PAFZZ	5306-638-4318	BOLT, MACHINE: COUPLING MTG 5150350 (72582)	EA	24	*	*	*	*	*	*	*	*	35	18
PAFZZ	5310-407-9566	WASHER, LOCK: COUPLING MTG, 5/16 IN. MS35338-45 (96906)	EA	12	*	*	*	*	*	*	*	*	35	19
PAFZZ	5330-202-2770	RETAINER: BLOWER DRIVE COUPLING 5150349 (72582)	EA	4	*	*	*	*	*	*	*	*	35	20
PAFZZ	2815-363-8136	COUPLING ASSEMBLY: BLOWER DRIVE 5150344 (72582)	EA	4	*	*	*	*	*	*	*	*	35	21
XAFZZ		CAM: BLOWER DRIVE COUPLING 5150348 (72582)	EA	4									35	22
R XAFZZ		SPRING, LEAF PACK 5196314 (72582)	EA	4									35	23
XAFZZ		SEAT: BLOWER DRIVE COUPLING SPRING 5150346 (72582)	EA	16									35	24
XAFZZ		SUPPORT, COUPLING 5150345 (72582)	EA	4									35	25
PAFZZ	2815-174-5642	GEAR, HELICAL: BLOWER DRIVE, RH 5122910 (72582)	EA	2	*	*	*	*	*	*	*	*	35	26
R PAFZZ	3020-528-9333	GEAR, HELICAL: BLOWER DRIVE, LH 5122911 (72582)	EA	2	*	*	*	*	*	*	*	*	35	26
PAFZZ	2815-569-1225	HUB: BLOWER DRIVE GEAR 5150279 (72582)	EA	4	*	*	*	*	*	*	*	*	35	27
PAFZZ	3110-100-6150	BALL: STEEL, 7/32 IN. DIA 169067 (72582)	EA	4	*	*	*	*	*	*	*	*	35	28
PAFZZ	3120-661-3259	WASHER, THRUST, HUB 5158901 (72582)	EA	4	*	*	*	*	*	*	*	*	35	29

(1) SMR CODE	(2) FEDERAL STOCK NUMBER	(3) DESCRIPTION REF NUMBER & MFR CODE	USABLE ON CODE	(4) UNIT OF MEAS	(5) QTY INC IN UNIT	(6) 30-DAY DS MAINT ALLOWANCE (a) 1-30	(b) 31-90	(c) 91-180	(7) 30-DAY GS MAINT ALLOWANCE (a) 1-30	(b) 31-90	(c) 91-180	(8) 1-YR ALW PER 100 EQUIP CNTGY	(9) DEPOT MAINT ALW PER 100 EQUIP	(10) ILLUSTRATION (a) FIG. NO.	(b) ITEM NO.
PAMZZ	4730-018-9566	PLUG, PIPE: 1/8 IN. 444687 (72582)		EA	2				*	*	*	*	*	35	
PCMZZ	2815-428-9722	BLOWER KIT, REPAIR 5192796 (72582) (CONSISTS OF)		EA	1				*	*	*	*	*	34	
		2-GASKET												34	4
		2-BEARING												34	12
		2-SEAL												34	16
		2-GASKET												34	20
		2-WASHER												34	31
		1-SHIM												34	37
		1-SHIM												34	37
		1-SHIM												34	37
		2-BEARING												34	39
		2-SEAL												34	43
		GROUP 26 - TRANSMISSION OIL FILTER													
PAC00	2815-901-0977	FILTER ASSEMBLY, OIL: TRANSMISSION 5129129 (72582)		EA	4	*	*	*	*	*	*	*	*	36	1
PACZZ	5307-765-4215	STUD: OIL FILTER, CENTER 5116427 (72582)		EA	4	*	*	*	*	*	*	*	*	36	2
C PACZZ	5310-136-5712	NUT, SPECIAL, JAM: 5/8-18 IN. 122366 (72582)		EA	4	*	*	*	*	*	*	*	*	36	3
XDCZZ		RETAINER, LUBE: OIL FILTER SPRING 5187309 (72582)		EA	4									36	4
PCCZZ	5330-604-8094	PACKING, PREFORMED: RETAINER 5187310 (72582)		EA	4	*	*	*	*	*	*	*	*	36	5
C XDCZZ		SPACER, RING: SEAT 5154538 (72582)		EA	4									36	6
XDCZZ		SPRING, HELICAL, COMPRESSOR: OIL FILTER 5187308 (72582)		EA	4									36	7
R PCCZZ	5330-841-5964	GASKET: OIL FILTER COVER 5574130 (72582)		EA	4	*	*	*	*	*	*	*	*	36	8
XAOZZ		SHELL ASSEMBLY: OIL FILTER 5574906 (72582)		EA	4									36	9
PAOZZ	4820-360-8299	PLUG, PIPE: OIL FILTER SHELL 5570480 (70040)		EA	4	*	*	*	*	*	*	*	*	36	10
PCCZZ	2940-019-8087	ELEMENT, FILTER: OIL 5574978 (72582)		EA	4	*	*	*	*	*	*	*	*	36	11
XACZZ		WASHER, NONMETALLIC: OIL SHELL 5571024 (70040)		EA	4									36	12
C XAOZZ		ADAPTER, OIL FILTER 5123382 (72582)		EA	4									36	13
XDOZZ		PLUG, MACHINE THREAD: BY-PASS VALVE 5126686 (72582)		EA	4									36	14
PAOZZ	5330-736-3508	WASHER, NONMETALLIC: PLUG VALVE 5575086 (70040)		EA	4	*	*	*	*	*	*	*	*	36	15
C XAOZZ		SPRING, HELICAL: BY-PASS VALVE 5133594 (72582)		EA	4									36	16

	(1) SMR CODE	(2) FEDERAL STOCK NUMBER	(3) DESCRIPTION REF NUMBER & MFR CODE	USABLE ON CODE	(4) UNIT OF MEAS	(5) QTY INC IN UNIT	(6) 30-DAY DS MAINT ALLOWANCE (a) 1-20	(b) 21-50	(c) 51-100	(7) 30-DAY GS MAINT ALLOWANCE (a) 1-20	(b) 21-50	(c) 51-100	(8) 1-YR ALW PER 100 EQUIP CNTGY	(9) DEPOT MAINT ALW PER 100 EQUIP	(10) ILLUSTRATION (a) FIG. NO.	(b) ITEM NO.
	PAOZZ	2940-944-6249	VALVE: OIL FILTER BY-PASS 5133431 (72582)		EA	4	*	*	*	*	*	*	*	*	36	17
	PAOZZ	4730-044-4692	PLUG, PIPE: ADAPTER 444692 (72582)		EA	4	*	*	*	*	*	*	*	*	36	18
	XDOZZ		BRACKET: OIL FILTER MOUNT, D ENGINE 5114625 (72582)		EA	2									36	
	XDOZZ		BRACKET: OIL FILTER MOUNT, D ENGINE 5114626 (72582)		EA	2									36	
	XDOZZ		SPACER: 13/32 IN. ID, 3/4 IN. OD, 1/2 IN. THK 5159347 (72582)		EA	4									36	
C	PAOZZ	5306-013-7902	BOLT, MACHINE: 3/8-24 X 4 IN. LG 186312 (72582)		EA	4	*	*	*	*	*	*	*	*	36	
	PAOZZ	5310-637-9541	WASHER, LOCK: 3/8 IN. MS35338-46 (96906)		EA	4	*	*	*	*	*	*	*	*	36	
N	XDOZZ		SUPPORT, BRACKET 5122473 (72582)	C	EA	2									36	
	PAOZZ	5305-543-2419	SCREW, CAP, HEXAGON HEAD: 3/8-16 X 1 1/8 IN. MS90728-61 (96906)		EA	12	*	*	*	*	*	*	*	*	36	
	PAOZZ	5305-068-0511	SCREW, CAP, HEXAGON HEAD: 3/8-16 X 1 1/4 IN. MS90728-62 (96906)		EA	4	*	*	*	*	*	*	*	*	36	
	PAOZZ	5310-637-9541	WASHER, LOCK: 3/8 IN. MS35338-46 (96906)		EA	16	*	*	*	*	*	*	*	*	36	
			GROUP 27 - TRANSMISSION OIL STRAINER													
	PAOZZ	2940-792-2712	STRAINER ASSEMBLY, OIL: MARINE GEAR 5112512 (72582)		EA	4	*	*	*	*	*	*	*	*	37	1
	PAOZZ	5306-226-4829	BOLT, MACHINE: COVER MTG, 5/16-18 THD SIZE, 1 1/4 IN. LG MS90728-36 (96906)		EA	12	*	*	*	*	*	*	*	*	37	2
	PAOZZ	5310-582-5965	WASHER, LOCK: COVER MTG, 5/16 IN. SCREW SIZE MS35338-44 (96906)		EA	12	*	*	*	*	*	*	*	*	37	3
	XAOZZ		COVER: OIL STRAINER 5112510 (72582)		EA	4									37	4
	PCCZZ	5330-786-5320	GASKET: OIL STRAINER COVER 5112511 (72582)		EA	1	*	*	*	*	*	*	*	*	37	5
	PAOZZ	2940-792-2711	ELEMENT: OIL STRAINER, MARINE GEAR 5574252 (72582)		EA	4	*	*	*	*	*	*	*	*	37	6
	XAOZZ		BODY: OIL STRAINER 5112513 (72582)		EA	4									37	7
			GROUP 28 - TRANSMISSION OIL COOLER CORE AND PLATE ASSEMBLY													
	PAOZZ	4730-908-6292	CLAMP, HOSE MS35842-14 (96906)		EA	8	*	*	*	*	*	*	*	*	38	1

	(1) SMR CODE	(2) FEDERAL STOCK NUMBER	(3) DESCRIPTION REF NUMBER & MFR CODE / USABLE ON CODE	(4) UNIT OF MEAS	(5) QTY INC IN UNIT	(6) 30-DAY DS MAINT ALLOWANCE (a) 1-20	(b) 21-50	(c) 51-100	(7) 30-DAY GS MAINT ALLOWANCE (a) 1-20	(b) 21-50	(c) 51-100	(8) 1-YR ALW PER 100 EQUIP CNTGY	(9) DEPOT MAINT ALW PER 100 EQUIP	(10) ILLUSTRATION (a) FIG. NO.	(b) ITEM NO.
	MOOZZ		HOSE, WATER: OIL COOLER, 2 1/4 IN. ID, 4 1/4 IN. LG 5167747 (72582) MANUFACTURE FROM:	EA	1									38	2
	PCOZZ	4720-277-9026	HOSE, 2.250 IN. ID ZZH428TYPE1CLASS2GRADEB (81348)	FT		*	*	*	*	*	*			38	
	PAOZZ	5305-269-3211	SCREW, CAP, HEXAGON HEAD: ELBOW MTG, 3/8-16 THD SIZE, 1 IN. LG MS90725-60 (96906)	EA	16	*	*	*	*	*	*	*	*	38	3
	PAOZZ	5310-637-9541	WASHER, LOCK: ELBOW MTG, 3/8 IN. SCREW SIZE MS35338-46 (96906)	EA	16	*	*	*	*	*	*	*	*	38	4
C	XDOZZ		ELBOW, WATER: OIL COOLER 5186460 (72582)	EA	4									38	5
	PCOZZ	5330-097-3248	GASKET: ELBOW MTG 5186428 (72582)	EA	4	*	*	*	*	*	*	*	*	38	6
C	PAOZZ	5305-225-8502	SCREW, CAP, HEXAGON HEAD: ADAPTER AND COVER MTG, 5/16-18 THD SIZE, 1 1/2 IN. LG MS90725-38 (96906)	EA	28	*	*	*	*	*	*	*	*	38	7
	PAOZZ	5310-407-9566	WASHER, LOCK: ADAPTER AND COVER MTG, 5/16 IN. SCREW SIZE MS35338-45 (96906)	EA	28	*	*	*	*	*	*	*	*	38	8
C	XDOZZ		ADAPTER: REVERSE GEAR OIL TUBE 51238822 (72582)	EA	4									38	9
	PCOZZ	2815-363-8177	GASKET: ADAPTER TUBE 5159430 (72582)	EA	4	*	*	*	*	*	*	*	*	38	10
	XDOZZ		COVER, HOUSING: OIL COOLER 5167775 (72582)	EA	2									38	11
C	KFOZZ		GASKET: CORE, OUTER 5154215 (72582) (PART OF SET, FSN 5330-379-4301)	EA	2									38	12
	PBOZZ	2930-377-2472	CORE: OIL COOLER 8502833 (72582)	EA	4	*	*	*	*	*	*	*	*	38	13
	KFOZZ		GASKET: CORE, INNER 5150155 (72582) (PART OF SET, FSN 5330-379-4301)	EA	2									38	14
			GROUP 29 - TRANSMISSION CONTROL VALVE AND TUBES												
C	PAFZZ	5306-226-4827	BOLT, MACHINE: TUBE TO TRANSFER HOUSING, 5/16-18 THD SIZE, 1 IN. LG MS90728-34 (96906)	EA	16	*	*	*	*	*	*	*	*	39	1
C	PAFZZ	5310-407-9566	WASHER, LOCK: TUBE TO TRANSFER HOUSING, 5/16 IN. SCREW SIZE MS35338-45 (96906)	EA	8	*	*	*	*	*	*	*	*	39	2
C	PAFZZ	5305-225-3840	SCREW, CAP, HEXAGON HEAD: OIL TUBE TO SELECTOR VALVE, 1/4-20 THD SIZE, 7/8 IN. LG MS90725-7 (96906)	EA	16	*	*	*	*	*	*	*	*	39	3
C	PAFZZ	5330-599-8112	WASHER, NONMETALLIC: OIL TUBE TO SELECTOR VALVE 5169866 (72582)	EA	32	*	*	*	*	*	*	*	*	39	4
C	XDFZZ		TUBE: REVERSE GEAR, OIL INLET, D ENGINE 5172611 (72582)	EA	1									39	5

(1)	(2)	(3)	(4)	(5)	(6) 30-DAY DS MAINT ALLOWANCE			(7) 30-DAY GS MAINT ALLOWANCE			(8)	(9)	(10) ILLUSTRATION	
SMR CODE	FEDERAL STOCK NUMBER	DESCRIPTION REF NUMBER & MFR CODE / USABLE ON CODE	UNIT OF MEAS	QTY INC IN UNIT	(a) 1-20	(b) 21-50	(c) 51-100	(a) 1-20	(b) 21-50	(c) 51-100	1-YR ALW PER 100 EQUIP CNTGY	DEPOT MAINT ALW PER 100 EQUIP	(a) FIG. NO.	(b) ITEM NO.
C KFFZZ		GASKET: REVERSE GEAR, INLET TUBE 5177578 (72582) (PART OF KIT, FSN 5330-618-2020)	EA	1									39	6
C KFFZZ		GASKET: OIL INLET TUBE 5150144 (72582) (PART OF KIT, FSN 5330-618-2020)	EA	8									39	7
C XDFZZ		TUBE: REVERSE GEAR, OIL INLET, 8 ENGINE 5172612 (72582)	EA	1									39	8
KFFZZ		GASKET: REVERSE GEAR, INLET TUBE 5177578 (72582) (PART OF KIT, FSN 5330-618-2020)	EA	1									39	9
C PAFZZ	5305-206-6776	SCREW, CAP, HEXAGON HEAD: SELECTOR VALVE MTG, 3/8-24 THD SIZE, 1 IN. LG FF585TY2STYLE10P (81348)	EA	8	*	*	*	*	*	*	*	*	39	10
C PAFZZ	5310-637-9541	WASHER, LOCK: SELECTOR VALVE, 3/8 IN. SCREW SIZE MS35338-46 (96906)	EA	8	*	*	*	*	*	*	*	*	39	11
C PAFZZ	5310-080-6004	WASHER, FLAT: SELECTOR VALVE, 3/8 IN. SCREW SIZE MS27183-14 (96906)	EA	8	*	*	*	*	*	*	*	*	39	12
KFFZZ		GASKET: SELECTOR VALVE HOUSING 5171146 (72582) (PART OF KIT, FSN 5330-618-2020)	EA	2									39	13
C PBFFF	2010-110-1883	VALVE ASSEMBLY, SELECTOR 5113914 (72582)	EA	1	*	*	*	*	*	*	*	*	39	14
PAOZZ	5305-225-3840	SCREW, CAP, HEXAGON HEAD: SELECTOR VALVE OPERATING LEVER, 1/4-20 THD SIZE, 7/8 IN. LG MS90725-7 (96906)	EA	1	*	*	*	*	*	*	*	*	40	1
R PAOZZ	5310-582-5965	WASHER, LOCK: SELECTOR VALVE OPERATING LEVER, 1/4 IN. SCREW SIZE MS35338-44 (96906)	EA	1	*	*	*	*	*	*	*	*	40	2
XOOZZ		LEVER: SELECTOR VALVE, OPERATING 5178404 (72582)	EA	1									40	3
PAOZZ	5310-768-0319	NUT, PLAIN, HEXAGON: 1/4-28 THD SIZE MS51968-2 (96906)	EA	2	*	*	*	*	*	*	*	*	40	4
PAOZZ	5310-582-5965	WASHER, LOCK: SHUTOFF VALVE LEVER, 1/4 IN. SCREW SIZE MS35338-44 (96906)	EA	1	*	*	*	*	*	*	*	*	40	5
PAOZZ	5305-267-8975	SCREW, CAP, HEXAGON HEAD: SHUTOFF VALVE LEVER, 1/4-28 THD SIZE, 1 1/8 IN. LG MS90726-9 (96906)	EA	2	*	*	*	*	*	*	*	*	40	6
XDOZZ		LEVER: CONTROL SHUTOFF 3222759 (72582)	EA	2									40	7
C PAFZZ		SCREW, CAP, HEXAGON HEAD 6700173 (72582)	EA	1	*	*	*	*	*	*	*	*	40	8
C PAFZZ	5310-167-0820	WASHER, FLAT: 15/16 IN. AN960-516 (88044)	EA	1	*	*	*	*	*	*	*	*	40	9
C XDFZZ		PLUG, [illegible]PE: SELECTOR PLUNGER 5171139 (72582)	EA	1									40	10
PAFZZ	2815-416-4143	SPRING, HELICAL, COMPRESSOR: SELECTOR VALVE PLUNGER 6700181 (72582)	EA	1	*	*	*	*	*	*	*	*	40	11

(1) SMR CODE	(2) FEDERAL STOCK NUMBER	(3) DESCRIPTION REF NUMBER & MFR CODE	USABLE ON CODE	(4) UNIT OF MEAS	(5) QTY INC IN UNIT	(6) 30-DAY DS MAINT ALLOWANCE (a) 1-20	(b) 21-50	(c) 51-100	(7) 30-DAY GS MAINT ALLOWANCE (a) 1-20	(b) 21-50	(c) 51-100	(8) 1-YR ALW PER 100 EQUIP CNTGY	(9) DEPOT MAINT ALW PER 100 EQUIP	(10) ILLUSTRATION (a) FIG. NO.	(b) ITEM NO.
PAFZZ	2815-816-4138	PLUNGER: SELECTOR VALVE 6700233 (72582)		EA	1	*	*	*	*	*	*	*	*	40	12
KFFZZ		SEAL, PLAIN, ENCLOSED: SELECTOR VALVE, OIL 6700846 (72582) (PART OF KIT, FSN 5330-618-2020)		EA	1									40	13
PAFZZ	2815-799-7771	VALVE, MASTER: SELECTOR CONTROL 5172645 (72582)		EA	1	*	*	*	*	*	*	*	*	40	14
C PAFZZ		PLUG, PIPE: HOUSING 5152066 (72582)		EA	6	*	*	*	*	*	*	*	*	40	15
PAFZZ	4820-785-5226	VALVE, SHUTOFF: RH 5171128 (72582)		EA	1	*	*	*	*	*	*	*	*	40	16
PAFZZ	5305-591-2691	SCREW ASSEMBLY: CONTROL VALVE, SHUTOFF 5172646 (72582)		EA	2	*	*	*	*	*	*	*	*	40	17
C PAFZZ	5310-193-9753	WASHER, FLAT: GASKET VALVE LOCK 5226029 (72582)		EA	4	*	*	*	*	*	*	*	*	40	18
C KFFZZ		SEAL, PLAIN, ENCASED: CONTROL VALVE 7649765 (19207) (PART OF KIT, FSN 5330-618-2020)		EA	2									40	19
PAFZZ	4820-785-5225	VALVE, SHUTOFF: LH 5171127 (72582)		EA	1	*	*	*	*	*	*	*	*	40	20
R PAFZZ	5340-232-5723	PLUG, EXPANSION: SHUTOFF VALVE END, 7/18 IN. DIA MS35648-6 (96906)		EA	1	*	*	*	*	*	*	*	*	40	21
PAFZZ	5340-054-1408	PLUG, EXPANSION: HOUSING MS35648-12 (96906)		EA	2	*	*	*	*	*	*	*	*	40	22
PAFZZ	5305-225-3840	SCREW, CAP, HEXAGON HEAD: COVER MTG, 1/4-20 THD SIZE, 7/8 IN. LG MS90725-7 (96906)		EA	16	*	*	*	*	*	*	*	*	40	23
PCFZZ	5330-599-9112	WASHER, NONMETALLIC 5169866 (72582)		EA	16	*	*	*	*	*	*	*	*	40	24
XDFZZ		COVER: HYDRAULIC CONTROL VALVE 5171140 (72582)		EA	2									40	25
R KFFZZ		GASKET: HYDRAULIC CONTROL COVER 5171147 (72582) (PART OF KIT, FSN 5330-618-2020)		EA	8									40	26
PAFZZ		BOLT, MACHINE: COVER MTG, 5/16-18 THD SIZE, 3/4 IN. LG 1798165 (72582)		EA	4	*	*	*	*	*	*	*	*	40	27
PAFZZ	5310-807-9566	WASHER, LOCK: COVER MTG, 5/16 IN. SCREW SIZE MS35338-45 (96906)		EA	4	*	*	*	*	*	*	*	*	40	28
XDFZZ		COVER: OIL LINE FLANGE 6700315 (72582)		EA	2									40	29
KFFZZ		GASKET: OIL LINE FLANGE COVER 5150144 (72582) (PART OF KIT, FSN 5330-618-2020)		EA	2									40	30
PAFZZ	5305-225-3840	SCREW, CAP, HEXAGON: COVER MTG, 1/4-20 THD SIZE, 7/8 IN. LG MS90725-7 (96906)		EA	8	*	*	*	*	*	*	*	*	40	
PAOZZ		PLUG, PIPE: SELECTOR VALVE 103877 (72582)	AB	EA	2	*	*	*	*	*	*	*	*	40	

best copy available

(1) SMR CODE	(2) FEDERAL STOCK NUMBER	(3) DESCRIPTION REF NUMBER & MFR CODE	USABLE ON CODE	(4) UNIT OF MEAS	(5) QTY INC IN UNIT	(6) 30-DAY DS MAINT ALLOWANCE (a) 1-20	(b) 21-50	(c) 51-100	(7) 30-DAY GS MAINT ALLOWANCE (a) 1-20	(b) 21-50	(c) 51-100	(8) 1-YR ALW PER 100 EQUIP CNTGY	(9) DEPOT MAINT ALW PER 100 EQUIP	(10) ILLUSTRATION (a) FIG. NO.	(b) ITEM NO.
PCFZZ	5330-618-2020	KIT, GASKET: HYDRAULIC GEAR ASSEMBLY 5193753 (72582) (CONSISTS OF)		EA	1	*	*	*	*	*	*	*	*	39	
		2-GASKET												39	6
		1-GASKET												39	7
		1-GASKET												39	9
		2-GASKET												40	20
		2-GASKET												40	26
		2-GASKET												40	30
		2-SEAL												62	2
		1-SEAL												62	23
		2-GASKET													
		2-GASKET													
		GROUP 30 - TACHOMETER DRIVE CABLE, ADAPTER AND SHAFT													
C PAOZZ		BOLT, MACHINE: DRIVE ADAPTER MTG, 5/16-18 THD SIZE, 3/4 IN. LG 179816 (72582)		EA	4	*	*	*	*	*	*	*	*	41	1
PAOZZ	5310-407-9566	WASHER, LOCK: DRIVE ADAPTER MTG, 5/16 IN. SCREW SIZE MS35338-45 (96906)		EA	4	*	*	*	*	*	*	*	*	41	2
XDOZZ		ADAPTER: TACHOMETER DRIVE 5155819 (72582)	AB	EA	2									41	3
N PAOZZ		ADAPTER, TACHOMETER DRIVE 5117298 (72582)	C	EA	2	*	*	*	*	*	*	*	*	41	3
KFOZZ		GASKET: TACHOMETER DRIVE ADAPTER 5155816 (72582) (PART OF GASKET SET, FSN 5330-379-4301)	AB	EA	2									41	4
PAOZZ	6680-456-1585	SHAFT ASSEMBLY: TACHOMETER DRIVE W/SLING 5188439 (72582)	AB	EA	2	*	*	*	*	*	*	*	*	41	5
PAOZZ	2815-605-4944	SHAFT ASSEMBLY: TACHOMETER DRIVE 1569669 (72582)	AB	EA	3	*	*	*	*	*	*	*	*	41	5
XAOZZ		CABLE ASSEMBLY: TACHOMETER 1569106 (72582)	AB	EA	3									41	
N PAOZZ	2990-623-9924	SHAFT ASSEMBLY: TACHOMETER CABLE 1536316 (72582)	C	EA	4	*	*	*	*	*	*	*	*	41	
N PAOZZ		SHAFT ASSEMBLY: TACHOMETER DRIVE W/SLINGER 5177232 (72582)	C	EA	2	*	*	*	*	*	*	*	*	41	
PAOZZ	6680-573-5240	ADAPTER, TACHOMETER: DRIVE CABLE 1536341 (72582)	AB	EA	1	*	*	*	*	*	*	*	*	41	6
PAOZZ	6680-692-3965	ADAPTER ASSEMBLY: DRIVE CABLE 1565185 (72582)	AB	EA	1	*	*	*	*	*	*	*	*	41	6
N PAOZZ	6680-019-4650	DRIVE, HEAD DUAL: LH TACHOMETER 1569407 (72582)	C	EA	4	*	*	*	*	*	*	*	*	41	
PAOZZ	6680-478-6501	COUPLING: TACHOMETER SHAFT ASSEMBLY 846430 (72582)		EA	2	*	*	*	*	*	*	*	*	41	
PAOZZ	5315-597-5387	KEY, MACHINE: TACHOMETER ADAPTER 1561509 (72582)		EA	2	*	*	*	*	*	*	*	*	41	

	(1) SMR CODE	(2) FEDERAL STOCK NUMBER	(3) DESCRIPTION REF NUMBER & MFR CODE	USABLE ON CODE	(4) UNIT OF MEAS	(5) QTY INC IN UNIT	(6) 30-DAY DS MAINT ALLOWANCE (a) 1-20	(b) 21-50	(c) 51-100	(7) 30-DAY GS MAINT ALLOWANCE (a) 1-20	(b) 21-50	(c) 51-100	(8) 1-YR ALW PER 100 EQUIP CNTGY	(9) DEPOT MAINT ALW PER 100 EQUIP	(10) ILLUSTRATION (a) FIG. NO.	(b) ITEM NO.
N	PAOZZ	6620-333-9253	CABLE, TACHOMETER, DRIVE: 5 FT LONG 1535530 (72582)	C	EA	1	•	•	•	•	•	•	•	•	41	
			GROUP 31 - TRANSMISSION OIL PUMP													
	PAOZZ	5310-732-0559	NUT, PLAIN, HEXAGON: PUMP MTG, 3/8-24 THD SIZE MS51968-8 (96906)		EA	16	•	•	•	•	•	•	•	•	42	1
R	PAOZZ	5306-021-2545	SCREW, CAP, HEXAGON HEAD: PUMP MTG, 3/8-24 THD SIZE, 5 1/2 IN. LG 186658 (72582)		EA	16	•	•	•	•	•	•	•	•	42	2
	PAOZZ	5310-637-9541	WASHER, LOCK: PUMP MTG, 3/8 IN. SCREW SIZE MS35338-46 (96906)		EA	16	•	•	•	•	•	•	•	•	42	3
	PAOZZ	5305-269-3211	SCREW, CAP, HEXAGON HEAD: PUMP MTG, 3/8-16 THD SIZE, 1 IN. LG MS90725-60 (96906)		EA	8	•	•	•	•	•	•	•	•	42	4
	PAOZZ	5310-637-9541	WASHER, LOCK: PUMP MTG, 3/8 IN. SCREW SIZE MS35338-46 (96906)		EA	8	•	•	•	•	•	•	•	•	42	5
	PCOZZ	5330-456-7192	GASKET: HYDRAULIC OIL PUMP 5150057 (72582)		EA	1	•	•	•	•	•	•	•	•	42	6
	PAOHH	2815-587-3399	PUMP, HYDRAULIC: D ENGINE 5112418 (72582) (COMPONENTS SAME AS PUMP, FSN 2815-587-3400, EXCEPT WHERE INDIVIDUAL COMPONENTS ARE ANNOTATED)	AB	EA	2	•	•	•	•	•	•	•	•	42	
	PAOZZ	2815-587-3400	PUMP, HYDRAULIC: B ENGINE 5112419 (72582)	AB	EA	2	•	•	•	•	•	•	•	•	42	
	PAHZZ	5305-068-0511	SCREW, CAP, HEXAGON HEAD: COVER MTG, 3/8-16 THD SIZE, 1 1/4 IN. LG MS90728-62 (96906)	AB	EA	12				•	•	•	•	•	42	7
	PAHZZ	5310-637-9541	WASHER, LOCK: COVER MTG, 3/8 IN. SCREW SIZE MS35338-46 (96906)		EA	12				•	•	•	•	•	42	8
	PAHZZ	5305-269-3219	SCREW, CAP, HEXAGON HEAD: COVER MTG, 3/8-16 THD SIZE, 2 3/4 IN. LG MS90725-69 (96906)	AB	EA	4				•	•	•	•	•	42	9
	PAHZZ	5310-637-9541	WASHER, LOCK: COVER MTG, 3/8 IN. SCREW SIZE MS35338-46 (96906)		EA	4				•	•	•	•	•	42	10
	XAHZZ		COVER ASSEMBLY: HYDRAULIC PUMP 5194931 (72582) (U/W PUMP, FSN 2815-587-3399, ONLY)	AB	EA	2									42	11
	XAHZZ		COVER ASSEMBLY: HYDRAULIC PUMP 5194905 (72582) (U/W PUMP, FSN 2815-587-3400, ONLY)	AB	EA	2									42	11
	POHZZ	2815-797-4806	SEAL: PUMP COVER 5196039 (72582)	AB	EA	4				•	•	•	•	•	42	12
	XDHZZ		DOWEL: PUMP COVER 5194920 (72582)	AB	EA	8									42	13
	PAHZZ	2815-363-8331	BEARING, SLEEVE: PUMP BODY 5193436 (72582)	AB	EA	2				•	•	•	•	•	42	14
	PAHZZ	2815-346-4554	ROTOR SET: HYDRAULIC PUMP SET 5193145 (72582)	AB	EA	4				•	•	•	•	•	42	15

(1) SMR CODE	(2) FEDERAL STOCK NUMBER	(3) DESCRIPTION REF NUMBER & MFR CODE	USABLE ON CODE	(4) UNIT OF MEAS	(5) QTY INC IN UNIT	(6) 30-DAY OS MAINT ALLOWANCE (a) 1-20	(b) 21-50	(c) 51-100	(7) 30-DAY OS MAINT ALLOWANCE (a) 1-20	(b) 21-50	(c) 51-100	(8) 1-YR ALW PER 100 EQUIP CNTGY	(9) DEPOT MAINT ALW PER 100 EQUIP	(10) ILLUSTRATION (a) FIG. NO.	(b) ITEM NO.
PAHZZ	5365-200-3606	RING, RETAINING: SNAP 5192273 (72582)	AB	EA	6				•	•	•	•	•	32	16
PAHZZ	5315-791-1645	PIN, DRIVE: PUMP SHAFT 5195199 (72582)	AB	EA	4				•	•	•	•	•	32	17
PAHZZ	2815-792-2714	SHAFT, PUMP: HYDRAULIC PUMP 5194912 (72582)	AB	EA	4				•	•	•	•	•	32	18
PAHZZ	5365-200-3606	RING, RETAINING: BEARING 5192273 (72582)		EA	4				•	•	•	•	•	32	19
PAHZZ	2815-363-8331	BEARING, SLEEVE: PUMP BODY 5193436 (72582)	AB	EA	2				•	•	•	•	•	32	20
PCHZZ	5330-290-8004	WASHER, NONMETALLIC: HYDRAULIC PUMP COVER 5193135 (72582)	AB	EA	4				•	•	•	•	•	32	21
PAHZZ	3120-789-0994	BUSHING, ROTOR: HYDRAULIC PUMP BODY 5193184 (72582)	AB	EA	4				•	•	•	•	•	32	22
XDDZZ		SCREW, VALVE: CAP VALVE 5194914 (72582)	AB	EA	4									32	23
PADZZ	2815-815-2938	GASKET: VALVE SCREW 120428 (72582)	AB	EA	4	•	•	•	•	•	•	•	•	32	24
XDDZZ		SCREW, ADAPTER: VALVE, HYDRAULIC PUMP 5194918 (72582)	AB	EA	4									32	25
PADZZ	2815-815-2938	GASKET: VALVE SCREW 120428 (72582)		EA	4	•	•	•	•	•	•	•	•	32	26
PADZZ	4820-789-5228	SPRING, FLOW CONTROL VALVE 5194913 (72582)	AB	EA	4	•	•	•	•	•	•	•	•	32	27
PADZZ	2815-789-5230	VALVE ASSEMBLY, RELIEF: HYDRAULIC PUMP 5195508 (72582)	AB	EA	4	•	•	•	•	•	•	•	•	32	28
PAHZZ	5365-200-3606	RING, RETAINING: BEARING 5192273 (72582)		EA	2				•	•	•	•	•	32	29
XAHZZ		BODY ASSEMBLY: HYDRAULIC PUMP 5194932 (72582) (U/W PUMP, FSN 2815-587-3399, ONLY)	AB	EA	2									32	30
XAHZZ		BODY ASSEMBLY: HYDRAULIC PUMP 5194906 (72582) (U/W PUMP, FSN 2815-587-3400, ONLY)	AB	EA	2									32	31
PADZZ	3020-517-3167	GEAR, SPUR: PUMP DRIVE 5171922 (72582)	AB	EA	4	•	•	•	•	•	•	•	•	32	32
PADZZ	2815-416-4168	INSERT, FLEXIBLE COUPLING: HYDRAULIC PUMP 5160408 (72582)	AB	EA	4	•	•	•	•	•	•	•	•	32	33
R PADZZ	5365-263-2710	RING, RETAINING: PUMP COUPLING 2070610 (72582)	AB	EA	4	•	•	•	•	•	•	•	•	32	34
PADZZ	3020-517-3167	GEAR, SPUR: PUMP DRIVE 5171922 (72582)	AB	EA	4	•	•	•	•	•	•	•	•	32	35
PCHZZ	5330-153-0669	SEAL, PLAIN, ENCASED: PUMP BODY 5196038 (72582)	AB	EA	4				•	•	•	•	•	32	36
PAHZZ	5330-531-6178	WASHER, NONMETALLIC: SEAL 5192268 (72582)	AB	EA	4				•	•	•	•	•	32	37
PADZZ	4730-246-9219	ELBOW, STREET: HYDRAULIC TRANSMISSION PUMP 100687 (72582)		EA	2	•	•	•	•	•	•	•	•		
XDDZZ		NIPPLE, PIPE: HYDRAULIC TRANSMISSION PUMP 5182961 (72582)		EA	2										

(1) SMR CODE	(2) FEDERAL STOCK NUMBER	(3) DESCRIPTION — REF NUMBER & MFR CODE	USABLE ON CODE	(4) UNIT OF MEAS	(5) QTY INC IN UNIT	(6) 30-DAY DS MAINT ALLOWANCE (a) 1-20	(b) 21-50	(c) 51-100	(7) 30-DAY GS MAINT ALLOWANCE (a) 1-20	(b) 21-50	(c) 51-100	(8) 1-YR ALW PER 100 EQUIP CNTGY	(9) DEPOT MAINT ALW PER 100 EQUIP	(10) ILLUSTRATION (a) FIG. NO.	(b) ITEM NO.
PCOZZ	4720-461-3767	HOSE, FLEXIBLE: OIL COOLER TO SELECTOR VALVE 5112499 (72582)	AB	EA	2	•	•	•	•	•	•	•	•		
XDOZZ		ADAPTER, OIL COOLER HOSE 5186431 (72582)		EA	2										
PAOZZ	5306-226-4827	BOLT, MACHINE: SELECTOR VALVE TUBE, 5/16-18 THD SIZE, 1 IN. LG MS90728-34 (96906)		EA	4	•	•	•	•	•	•	•	•		
PAGZZ	5310-407-9566	WASHER, LOCK: SELECTOR VALVE TUBE, 5/16 IN. SCREW SIZE MS35338-45 (96906)		EA	4	•	•	•	•	•	•	•	•		
PAOZZ	4730-613-9339	ELBOW, SELECTOR VALVE TUBE 109429 (72582)		EA	2	•	•	•	•	•	•	•	•		
PAOZZ	4730-193-0875	BUSHING, REDUCING PIPE: SELECTOR VALVE TUBE, 3/4 IN. TO 1/2 IN. 144034 (72582)		EA	2	•	•	•	•	•	•	•	•		
N PAOZZ	5305-269-3211	SCREW, CAP, HEXAGON HEAD: PUMP MTG, 3/8-16 THD SIZE, 1 IN. LG MS90725-60 (96906)	C	EA	4	•	•	•	•	•	•	•	•	43	1
N PAOZZ	5310-637-9541	WASHER, LOCK: PUMP MTG, 3/8 IN. SCREW SIZE MS35338-46 (96906)	C	EA	4	•	•	•	•	•	•	•	•	43	2
N PAOZZ	5310-080-6004	WASHER, PLAIN: PUMP MTG, 3/8 IN. SCREW SIZE MS27183-14 (72582)	C	EA	4	•	•	•	•	•	•	•	•	43	3
N PAOZZ	4320-689-3036	PUMP HYDRAULIC: D ENGINE 5141732 (72582)	C	EA	2	•	•	•	•	•	•	•	•	43	4
N PAOHH	4320-689-3037	PUMP HYDRAULIC: B ENGINE 5140373 (72582)	C	EA	2	•	•	•	•	•	•	•	•	43	4
N PCOZZ	5330-695-2157	GASKET: HYDRAULIC PUMP TO ADAPTER 5188955 (72582)		EA	2	•	•	•	•	•	•	•	•	43	5
N PAOZZ	4320-557-9394	HUB: BLOWER AND HYDRAULIC PUMP DRIVE 5127670 (72582)	C	EA	1	•	•	•	•	•	•	•	•	43	6
N PAOZZ	4320-557-9395	HUB: HYDRAULIC, PUMP DRIVE 5143768 (72582)	C	EA	2	•	•	•	•	•	•	•	•	43	6
N PAOZZ	4320-689-3040	ADAPTER, HYDRAULIC PUMP 5140397 (72582)	C	EA	2	•	•	•	•	•	•	•	•		
N PAOZZ	3040-494-3068	SHAFT: BLOWER AND HYDRAULIC PUMP DRIVE 5189454 (72582)	C	EA	1	•	•	•	•	•	•	•	•		
N PAOZZ	5315-010-6749	KEY, WOODRUFF 106749 (72582)	C	EA	1	•	•	•	•	•	•	•	•		
N PAOZZ	4730-196-2072	COUPLING: HYDRAULIC PUMP DRIVE 5145282 (72582)	C	EA	2	•	•	•	•	•	•	•	•		
N PAOZZ	5310-363-8157	NUT, HUB TO PUMP SHAFT 451070 (72582)	C	EA	2	•	•	•	•	•	•	•	•		
N PCOZZ	4720-557-9632	HOSE ASSEMBLY, FLEXIBLE: PUMP TO FILTER, 45 IN. LG 5144722 (72582)	C	EA	1	•	•	•	•	•	•	•	•		
N PAOZZ	4710-457-8623	TUBE, OIL FILTER: D ENGINE 5128980 (72582)	C	EA	1	•	•	•	•	•	•	•	•		
N PCOZZ	4720-557-9629	HOSE ASSEMBLY, FLEXIBLE: PUMP TO FILTER, 50 IN. LG 5144539 (72582)	C	EA	1	•	•	•	•	•	•	•	•		

	(1) SMR CODE	(2) FEDERAL STOCK NUMBER	(3) DESCRIPTION REF NUMBER & MFR CODE	USABLE ON CODE	(4) UNIT OF MEAS	(5) QTY INC IN UNIT	(6) 30-DAY DS MAINT ALLOWANCE (a) 1-20	(b) 21-50	(c) 51-100	(7) 30-DAY GS MAINT ALLOWANCE (a) 1-20	(b) 21-50	(c) 51-100	(8) 1-YR ALW PER 100 EQUIP CNTGY	(9) DEPOT MAINT ALW PER 100 EQUIP	(10) ILLUSTRATION (a) FIG. NO.	(b) ITEM NO.
N	PAOZZ	5305-225-8498	SCREW, CAP, HEXAGON HEAD: CLIPS TO BRACKET MS30725-33 (96906)	C	EA	4	*	*	*	*	*	*	*	*		
N	PAOZZ	5310-809-3078	WASHER, PLAIN 106261 (72582)		EA	8	*	*	*	*	*	*	*	*		
N	PAOZZ	5310-407-9566	WASHER, LOCK: 5/16 IN. SCREW SIZE MS35338-45 (96906)	C	EA	4	*	*	*	*	*	*	*	*		
N	PAOZZ	5310-880-7744	NUT, PLAIN, HEXAGON: 5/16-18 THD SIZE MS51967-5 (96906)	C	EA	4	*	*	*	*	*	*	*	*		
N	PAOZZ	4730-188-1877	NIPPLE 141504 (72582)	C	EA	2	*	*	*	*	*	*	*	*		
N	XDOZZ		BRACKET COOLER 5181339 (72582)	C	EA	4										
N	XDOZZ		CLIP HOSE 2236474 (72582)	C	EA	8										
N	PCOZZ	4720-557-9445	HOSE, FLEXIBLE: OIL COOLER SELECTOR 5144581 (72582)	C	EA	2	*	*	*	*	*	*	*	*		
N	PAOZZ	4730-188-1877	NIPPLE, PIPE: 1/2-14 THD SIZE, 1 1/2 IN. LG 141504 (72582)	C	EA	1	*	*	*	*	*	*	*	*		
N	PAOZZ	4730-249-3917	ELBOW: 1/2 IN., 90 DEG, PIPE 119098 (72582)	C	EA	1	*	*	*	*	*	*	*	*		
N	PAOZZ	4730-027-0774	CONNECTOR: 5/8 IN., TUBE X 1/2 IN. 116487 (72582)	C	EA	1	*	*	*	*	*	*	*	*		
N	XDOZZ		CLIP, PUMP TO FILTER HOSES 2236474 (72582)	C	EA	5										
N	PAOZZ	4710-457-8624	TUBE: RH, OIL FLYWHEEL HOUSING 5180190 (72582)	C	EA	1	*	*	*	*	*	*	*	*		
N	PAOZZ	4710-457-8625	TUBE: LH, OIL FLYWHEEL HOUSING 5180191 (72582)	C	EA	1	*	*	*	*	*	*	*	*		
N	PCOZZ	4720-980-1521	HOSE: OIL FLYWHEEL HOUSING 5112181 (72582)	C	EA	2	*	*	*	*	*	*	*	*		
N	PAOZZ	4730-585-8394	CLAMP, HOSE 2337379 (72582)		EA	2	*	*	*	*	*	*	*	*		
N	PAOZZ	5305-068-0511	SCREW, CAP, HEXAGON HEAD: 3/8-16 THD SIZE, 1 1/4 IN. LG MS90728-62 (96906)	C	EA	4	*	*	*	*	*	*	*	*		
N	PAOZZ	5310-637-9581	WASHER, LOCK: 3/8 IN. MS35338-46 (96906)	C	EA	4	*	*	*	*	*	*	*	*		
N	PCOZZ	2815-588-5111	GASKET: OIL CONNECTOR TUBE 5173762 (72582)	C	EA	2	*	*	*	*	*	*	*	*		
	KFOZZ		GASKET: OIL INLET TUBE, CONTROL VALVE 5171147 (72582) (PART OF KIT, FSN 5330-379-4301)		EA	2										
	PAOZZ	5340-282-7509	CLAMP, LOOP: SELECTOR VALVE TUBE MS21333-62 (96906)	AB	EA	4	*	*	*	*	*	*	*	*		
	XDOZZ		CLIP: OIL TUBE, SELECTOR VALVE 5186803 (72582)	AB	EA	4										
	PAOZZ	5305-269-3218	SCREW, CAP, HEXAGON HEAD: SELECTOR VALVE, TUBE CLAMP MS90725-68 (96906)	AB	EA	4	*	*	*	*	*	*	*	*		
	XDOZZ		SPACER, SLEEVE: TUBE CLIP, SELECTOR VALVE 5160425 (72582)	AB	EA	4										

(1) SMR CODE	(2) FEDERAL STOCK NUMBER	(3) DESCRIPTION REF NUMBER & MFR CODE	USABLE ON CODE	(4) UNIT OF MEAS	(5) QTY INC IN UNIT	(6) 30-DAY DS MAINT ALLOWANCE (a) 1-30	(b) 31-50	(c) 51-100	(7) 30-DAY GS MAINT ALLOWANCE (a) 1-30	(b) 31-50	(c) 51-100	(8) 1-YR ALW PER 100 EQUIP CNTGY	(9) DEPOT MAINT ALW PER 100 EQUIP	(10) ILLUSTRATION (a) FIG. NO.	(b) ITEM NO.
PAOZZ	4710-457-8621	TUBE: OIL FILTER, B ENGINE, HYDRAULIC PUMP TO COOLER 5128982 (72582)		EA	1	•	•	•	•	•	•	•	•		
PAOZZ	4710-457-8623	TUBE: OIL FILTER, D ENGINE, HYDRAULIC PUMP TO COOLER 5128980 (72582)		EA	1	•	•	•	•	•	•	•	•		
PCOZZ	4720-461-3768	HOSE ASSEMBLY: FLEXIBLE, PUMP TO FILTER 5188697 (72582)	AB	EA	1	•	•	•	•	•	•	•	•		
PCOZZ	4720-932-4732	HOSE ASSEMBLY: FLEXIBLE, PUMP TO FILTER 5114071 (72582)	AB	EA	1	•	•	•	•	•	•	•	•		
PCOZZ	2815-389-6042	SEAL: 5/8 IN., TUBE SEALASTIC 5103565 (72582)		EA	4	•	•	•	•	•	•	•	•		
PAOZZ	473-753-4414	ELBOW: PUMP TO OIL COOLER TUBE, 5/8 IN. TUBE, 90 DEG MS39230-4 (96906)		EA	4	•	•	•	•	•	•	•	•		
PAOZZ	4730-193-0875	BUSHING: PUMP TO OIL COOLER TUBE, 3/4 IN. TO 1/2 IN. 144034 (72582)		EA	4	•	•	•	•	•	•	•	•		
PAOZZ	4730-253-4414	ELBOW, STREET: PUMP TO OIL COOLER TUBE MS39230-4 (96906)		EA	4	•	•	•	•	•	•	•	•		
PAOZZ	4730-613-9339	ELBOW: PUMP TO OIL COOLER TUBE 109429 (72582)		EA	2	•	•	•	•	•	•	•	•		
PAOZZ	4730-200-0911	NUT, TUBE COUPLING: PUMP TO OIL COOLER TUBE 5103566 (72582)	AB	EA	4	•	•	•	•	•	•	•	•		
		GROUP 32 - POWER TAKE-OFF ASSEMBLY													
PAFZZ	5305-068-0511	SCREW, CAP, HEXAGON HEAD: POWER TAKE-OFF MTG, 3/8-16 THD SIZE, 1 1/4 IN. LG 5157244 (72582)		EA	12	•	•	•	•	•	•	•	•	32	1
PAFZZ	5310-637-9541	WASHER, LOCK: POWER TAKE-OFF MTG, 3/8 IN. SCREW SIZE MS35338-46 (96906)		EA	18	•	•	•	•	•	•	•	•	32	2
C PAFHH	2990-168-2291	POWER TAKE-OFF ASSEMBLY 5143770 (72582)		EA	2	•	•	•	•	•	•	•	•	32	
PAHZZ	5310-487-5323	NUT, DRIVE SHAFT 5192490 (72582)		EA	2				•	•	•	•	•	32	3
PAHZZ	5310-782-4338	WASHER, LOCK: DRIVE SHAFT NUT 5192491 (72582)		EA	2				•	•	•	•	•	32	4
PAHZZ	2030-110-1893	RING: 8 IN., CLUTCH DRIVING 5192358 (72582)		EA	2				•	•	•	•	•	32	5
KFHTZ		PLATE, CLUTCH: OUTER 5190998 (72582) (PART OF KIT, FSN 2030-110-1890)		EA	2									32	6
R PAHZZ	5365-289-6782	RING, RETAINING: CLUTCH YOKE 5192142 (72582)		EA	6				•	•	•	•	•	32	7
R PAHZZ	5315-282-1151	PIN, YOKE, LEVER 5193422 (72582)		EA	6				•	•	•	•	•	32	8
PAHZZ	2520-347-1893	LEVER, TOGGLE: CLUTCH YOKE 5194140 (72582)		EA	6				•	•	•	•	•	32	9

(1) SMR CODE	(2) FEDERAL STOCK NUMBER	(3) DESCRIPTION REF NUMBER & MFR CODE / USABLE ON CODE	(4) UNIT OF MEAS	(5) QTY INC IN UNIT	(6) 30-DAY DS MAINT ALLOWANCE (a) 1-20	(b) 21-50	(c) 51-100	(7) 30-DAY GS MAINT ALLOWANCE (a) 1-20	(b) 21-50	(c) 51-100	(8) 1-YR ALW PER 100 EQUIP CNTGY	(9) DEPOT MAINT ALW PER 100 EQUIP	(10) ILLUSTRATION (a) FIG. NO.	(b) ITEM NO.
KFHZZ		SPRING, HELICAL, COMPRESSION: CLUTCH RETURN 5193814 (72582) (PART OF KIT, FSN 2030-110-1890)	EA	12									44	10
PAHZZ	2990-895-3407	DISK, CLUTCH: 8 IN. 5197890 (72582)	EA	2				•	•	•	•	•	44	11
PAHZZ	5305-637-6609	SCREW, MACHINE: FILLISTER, HEAD, 1/4-20 THD SIZE, 3/8 IN. LG 114351 (72582)	EA	2				•	•	•	•	•	44	12
PAHZZ	5310-209-0786	WASHER, LOCK: EXTERNAL TOOTH, 1/4 IN. SCREW SIZE MS35335-33 (96906)	EA	2				•	•	•	•	•	44	13
PAHZZ	3655-446-7326	LOCK, ADJUSTING, NUT 5196066 (72582)	EA	2				•	•	•	•	•	44	14
KFHZZ		PLATE, CLUTCH: INNER 5196995 (72582) (PART OF KIT, FSN 2030-110-1890)	EA	2									44	15
PAHZZ	5310-458-2333	NUT, CLUTCH: ADJUSTING 5197889 (72582)	EA	2				•	•	•	•	•	44	16
PAHZZ	2030-110-1889	SPRING, CLUTCH: LEVER 5194139 (72582)	EA	2				•	•	•	•	•	44	17
C PAHZZ	5365-281-6700	RING, RETAINING: YOKE LINK PIN 5192176 (72582)	EA	12				•	•	•	•	•	44	18
PAHZZ	5315-281-7497	PIN, GROOVED: HEADED YOKE LINK 5193420 (72582)	EA	12				•	•	•	•	•	44	19
PAHZZ	2520-354-6873	LINK: CLUTCH RELEASE YOKE 5193421 (72582)	EA	12				•	•	•	•	•	44	20
PAHZZ	2010-895-3406	SLEEVE: CLUTCH RELEASE 5193417 (72582)	EA	2				•	•	•	•	•	44	21
PAHZZ	2520-354-6922	BEARING ASSEMBLY: COLLAR SLEEVE 5196715 (72582)	EA	2				•	•	•	•	•	44	22
C PAHZZ	5310-880-7746	NUT, PLAIN, HEXAGON: BEARING, 5/16-24 THD SIZE MS51968-5 (96906)	EA	4				•	•	•	•	•	44	23
PAHZZ	5306-225-9095	BOLT, MACHINE: BEARING, 5/16-24 THD SIZE, 2 IN. LG MS90726-40 (96906)	EA	4				•	•	•	•	•	44	24
PAHZZ	5306-702-1867	BOLT, MACHINE: LOCK MTG, 5/16-18 THD SIZE, 1 1/2 IN. LG 179812 (72582)	EA	2				•	•	•	•	•	44	25
PAHZZ	5310-407-9566	WASHER, LOCK: LOCK MTG, 5/16 IN. SCREW SIZE MS35338-45 (96906)	EA	2				•	•	•	•	•	44	26
PAHZZ	2030-110-1885	PLATE, LOCKING: CLUTCH, DRIVE SHAFT BEARING 5196444 (72582)	EA	2				•	•	•	•	•	44	27
PAHZZ	2030-110-1886	RETAINER: DRIVE SHAFT BEARING 5193251 (72582)	EA	2				•	•	•	•	•	44	28
PAHZZ	2990-895-3402	CUP, BEARING: DRIVE SHAFT, CLUTCH 432777 (72582)	EA	2				•	•	•	•	•	44	29
PAHZZ	2990-895-3403	CONE, BEARING: CLUTCH SHAFT 443858 (72582)	EA	2				•	•	•	•	•	44	30
PAHZZ	5315-492-4342	KEY: CLUTCH ASSEMBLY, 1/4 IN. SQ., 2 IN. LG 5192489 (72582)	EA	2				•	•	•	•	•	44	31
PAHZZ	5315-492-4340	KEY: PULLEY, 1/2 IN. SQ., 5 IN. LG 5192488 (72582)	EA	2				•	•	•	•	•	44	32

(1) SMR CODE	(2) FEDERAL STOCK NUMBER	(3) DESCRIPTION REF NUMBER & MFR CODE / USABLE ON CODE	(4) UNIT OF MEAS	(5) QTY INC IN UNIT	(6) 30-DAY DS MAINT ALLOWANCE (a) 1-20	(b) 21-50	(c) 51-100	(7) 30-DAY GS MAINT ALLOWANCE (a) 1-20	(b) 21-50	(c) 51-100	(8) 1-YR ALW PER 100 EQUIP CNTGY	(9) DEPOT MAINT ALW PER 100 EQUIP	(10) ILLUSTRATION (a) FIG. NO.	(b) ITEM NO.
PAHZZ	2030-110-1887	SHAFT: CLUTCH DRIVE 5192487 (72582)	EA	2				•	•	•	•	•	44	33
PAHZZ	2990-895-3402	CUP, BEARING: DRIVE SHAFT, CLUTCH 432777 (72582)	EA	2				•	•	•	•	•	44	34
PAHZZ	2990-895-3403	CONE, BEARING: CLUTCH SHAFT 443858 (72582)	EA	2				•	•	•	•	•	44	35
PAHZZ	2520-374-7283	FORK ASSEMBLY: YOKE 5192150 (72582)	EA	2				•	•	•	•	•	44	36
PAHZZ	5305-068-0511	SCREW, CAP, HEXAGON: FORK ASSEMBLY, 3/8-16 THD SIZE, 1 1/4 IN. LG MS90728-62 (96906)	EA	4				•	•	•	•	•	44	37
PAHZZ	5310-637-9541	WASHER, LOCK: FORK ASSEMBLY, 3/8 IN. SCREW SIZE MS35338-46 (96906)	EA	4				•	•	•	•	•	44	38
PAHZZ	5315-012-4553	KEY, WOODRUFF: FORK MTG, 1/4 X 1 IN. LG MS35756-17 (96906)	EA	4				•	•	•	•	•	44	39
PAHZZ	2520-390-8843	SHAFT, STRAIGHT: CLUTCH RELEASE 5192251 (72582)	EA	2				•	•	•	•	•	44	40
XDHZZ		HOUSING, CLUTCH: POWER TAKE-OFF 5192486 (72582)	EA	2									44	41
PAOZZ	5305-725-2317	SCREW, CAP, HEXAGON HEAD: LEVER, 3/8-16 THD SIZE, 1 1/2 IN. LG MS90728-64 (96906)	EA	2	•	•	•	•	•	•	•	•	45	1
PAHZZ	5310-637-9541	WASHER, LOCK: LEVER, 3/8 IN. SCREW SIZE MS35338-46 (96906)	EA	2				•	•	•	•	•	45	2
XDOZZ		LEVER: CLUTCH, HAND CONTROL 3290211 (72582)	EA	2									45	3
PAOZZ	5305-988-1721	SCREW, MACHINE: INSPECTION COVER MTG, 1/4-20 THD SIZE, 3/8 IN. LG MS35206-277 (96906)	EA	4	•	•	•	•	•	•	•	•	45	4
XDOZZ		COVER, CLUTCH: INSPECTION HOLE 5192157 (72582)	EA	2									45	5
PAOZZ	5330-602-4314	GASKET: INSPECTION HOLE COVER 5192415 (72582)	EA	2	•	•	•	•	•	•	•	•	45	6
PAOZZ	5310-136-5712	NUT: HOSE, 5/8-18 THD SIZE 122366 (72582)	EA	2	•	•	•	•	•	•	•	•	45	7
PAOZZ	4730-050-4208	FITTING, LUBRICATION: CLUTCH, 1/8-27 THD SIZE MS15003-1 (96906)	EA	2	•	•	•	•	•	•	•	•	45	8
PCHZZ	4720-529-1214	HOSE ASSEMBLY: RELEASE BEARING 5192296 (72582)	EA	2				•	•	•	•	•	45	9
PAHZZ	4730-050-4208	FITTING, LUBRICATION: RELEASE BEARING, 1/8-27 THD SIZE MS15003-1 (96906)	EA	2				•	•	•	•	•	45	10
KFHZZ		CLUTCH ASSEMBLY: 8 IN. 5198993 (72582) (PART OF KIT, FSN 2030-110-1890)	EA	2									45	
KFHZZ		SPRING, HELICAL, COMPRESSION: CLUTCH RETURN 5192414 (72582) (PART OF KIT, FSN 2030-110-1890)	EA	6									45	

(1) SMR CODE	(2) FEDERAL STOCK NUMBER	(3) DESCRIPTION REF NUMBER & MFR CODE	USABLE ON CODE	(4) UNIT OF MEAS	(5) QTY INC IN UNIT	(6) 30-DAY DS MAINT ALLOWANCE (a) 1-20	(b) 21-50	(c) 51-100	(7) 30-DAY GS MAINT ALLOWANCE (a) 1-20	(b) 21-50	(c) 51-100	(8) 1-YR ALW PER 100 EQUIP CNTGY	(9) DEPOT MAINT ALW PER 100 EQUIP	(10) ILLUSTRATION (a) FIG. NO.	(b) ITEM NO.
PAHZZ	2030-110-1888	PLATE, WEAR: CLUTCH ADJUSTING NUT 5197088 (72582)		EA	2				•	•	•	•	•	45	
PAQZZ	5305-688-2111	SCREW, CAP, HEXAGON HEAD: POWER TAKE-OFF MTG, 3/8-16 THD SIZE, 1 3/4 IN. LG MS90728-63 (96906)		EA	6	•	•	•	•	•	•	•	•	45	
PAHZZ	2030-110-1890	KIT, CLUTCH, PLATE 5198658 (72582) (CONSISTS OF)		EA	1				•	•	•	•	•	44	
		1-PLATE												44	6
		16-SPRING												44	10
		2-PLATE												44	15
		3-SPRING													
		1-CLUTCH													
		GROUP 33 - ALTERNATOR, REGULATOR AND VOLTAGE PROTECTOR													
PCCZZ	3050-528-4626	BELT, V: ALTERNATOR MS39243-25 (96906)	A	EA	2	•	•	•	•	•	•	•	•	46	1
PCCZZ	3030-529-0479	BELT, V: ALTERNATOR MS39256851 (96906)	B	EA	2	•	•	•	•	•	•	•	•	46	1
N PCCZZ	3030-580-9453	BELT, V MATCHED SET: ALTERNATOR AND BILGE PUMP MS39256-2855 (96906)	C	EA	6	•	•	•	•	•	•	•	•	46	1
N PAGFH	2920-150-0038	ALTERNATOR: 70 AMP, 28.5V 8BA3006P (31211) (COMPONENTS SAME AS ALTERNATOR, FSN 2920-477-6103, EXCEPT WHERE INDIVIDUAL COMPONENTS ARE ANNOTATED)	C	EA	1	•	•	•	•	•	•	•	•	46	
C PAGFH	2920-477-6103	GENERATOR ALTERNATOR: 70 AMP, 24V 10-90 (31211)	AB	EA	1	•	•	•	•	•	•	•	•	46	
PAFZZ	5310-173-0117	NUT, SELF-LOCKING: GENERATOR FAN, 5/8-18 THD SIZE 20-126 (31211)		EA	1	•	•	•	•	•	•	•	•	46	2
C PAFZZ	5310-168-6372	WASHER, FLAT: GENERATOR FAN, 5/8 IN. ID, 1 1/4 IN. OD 20-129 (31211)		EA	1	•	•	•	•	•	•	•	•	46	3
N XDFZZ		PULLEY, DUAL ALTERNATOR: 3.33 IN. OD, 5-8 IN. BELT 7-45 (31211)	C	EA	1									46	4
C XDFZZ		PULLEY, GROOVED 7818-0133 (24161)	AB	EA	2									46	4
XDFZZ		FAN, BI-DIRECTIONAL: GENERATOR 7-49 (31211)		EA	1									46	5
C PAFZZ	5315-165-2011	KEY, WOODRUFF: NO. 8, SHAFT END 20-53 (31211)		EA	1	•	•	•	•	•	•	•	•	46	6
C XDFZZ		WASHER, FLAT: BEARING DUST SHIELD 20-130 (31211)		EA	1									46	7
PAFZZ	5330-456-6967	FELT, PREFORMED: BEARING DUST SHIELD 11-8 (31211)		EA	1	•	•	•	•	•	•	•	•	46	8
C XDFZZ		SPACER, PULLEY: GENERATOR 20-52 (31211)		EA	1									46	9
C PAFZZ	5306-883-8662	BOLT, THRU: NO. 12-28 THD SIZE, 2 5/8 IN. LG 20-133 (31211)		EA	4	•	•	•	•	•	•	•	•	46	10

(1) SMR CODE	(2) FEDERAL STOCK NUMBER	(3) DESCRIPTION — REF NUMBER & MFR CODE	USABLE ON CODE	(4) UNIT OF MEAS	(5) QTY INC IN UNIT	(6) 30-DAY DS MAINT ALLOWANCE (a) 1-20	(b) 21-50	(c) 51-100	(7) 30-DAY GS MAINT ALLOWANCE (a) 1-20	(b) 21-50	(c) 51-100	(8) 1-YR ALW PER 100 EQUIP CNTGY	(9) DEPOT MAINT ALW PER 100 EQUIP	(10) ILLUSTRATION (a) FIG. NO.	(b) ITEM NO.
C PAFZZ	5310-168-6375	WASHER, LOCK: THRU BOLT, NO. 12 SCREW SIZE 20-112 (31211)	A	EA	4	*	*	*	*	*	*	*	*	46	11
PAFZZ	5305-240-5657	SCREW, CAP, SELF-LOCKING: FRONT HOUSING, NO. 10-32 THD SIZE, 1 IN. LG 20-134 (31211)		EA	3	*	*	*	*	*	*	*	*	46	12
XAFZZ		HOUSING, FRONT: GENERATOR 14-39 (31211)		EA	1									46	13
C XDFZZ		RETAINER, FRONT BEARING 11-31 (31211)	AB	EA	1									46	14
N XDFZZ		RETAINER, FRONT BEARING 11-47 (31211)	C	EA	1									46	14
C PAFZZ	5330-075-3439	GASKET: GREASE RETAINER SHAFT 11-11 (31211)	AB	EA	1	*	*	*	*	*	*	*	*	46	15
C PAFZZ	5330-069-0606	SEAL, PLAIN, ENCASED: FRONT HOUSING 11-5 (31211)		EA	1	*	*	*	*	*	*	*	*	46	16
C PAFZZ	3110-456-6915	BEARING, FRONT: NO. 305 11-6 (31211)	AB	EA	1	*	*	*	*	*	*	*	*	46	17
N PAFZZ	3110-456-6915	BEARING, FRONT 11-34 (31211)	C	EA	1	*	*	*	*	*	*	*	*	46	17
N PAFZZ	5330-069-0606	SEAL, PLAIN, ENCASED: FRONT HOUSING 11-5 (31211)	C	EA	1	*	*	*	*	*	*	*	*	46	18
R PAFZZ	5305-132-7815	SCREW, CAP, SOCKET HEAD: ROTOR, NO. 10-32 THD SIZE, 5/8 IN. LG 20-56 (31211)		EA	1	*	*	*	*	*	*	*	*	46	19
C PAFZZ	5310-168-6374	WASHER, LOCK: NO. 10 SCREW SIZE 20-111 (31211)		EA	7	*	*	*	*	*	*	*	*	46	20
C PAFZZ	2920-060-0011	RING ASSEMBLY: ELECTRIC CONTACT 12-9 (31211)	AB	EA	1	*	*	*	*	*	*	*	*	46	21
N PAFZZ	5365-166-1798	RING ASSEMBLY: SLIP 12-22 (31211) (U/O ALTERNATOR, P/N 88A3006P (31211), ONLY)	C	EA	1	*	*	*	*	*	*	*	*	46	21
C PAFZZ	3110-406-3748	BEARING ASSEMBLY, ROTOR: REAR 11-39 (31211)		EA	1	*	*	*	*	*	*	*	*	46	22
N XAFZZ		ROTOR ASSEMBLY 12-10 (31211)	C	EA	1									46	23
C XAFZZ		ROTOR ASSEMBLY 12-18 (31211)	AB	EA	1									46	23
PAOZZ	5310-168-6456	NUT, PLAIN, HEXAGON: TERMINAL STUD, NO. 10-24 THD SIZE 20-119 (31211)		EA	6	*	*	*	*	*	*	*	*	46	24
PAOZZ	5310-168-6374	WASHER, LOCK: TERMINAL STUD, NO. 10 SCREW SIZE 20-111 (31211)		EA	1	*	*	*	*	*	*	*	*	46	25
C PAOZZ	5306-351-4461	WASHER, FLAT: TERMINAL STUD, 13/64 IN. ID, 7/16 IN. OD 20-54 (31211)	AB	EA	2	*	*	*	*	*	*	*	*	46	26
C PAOZZ	5970-410-2546	WASHER, INSULATING: TERMINAL STUD 15-3 (31211)		EA	1	*	*	*	*	*	*	*	*	46	27
PAOZZ	5305-175-5107	SCREW, THREAD FORMING: REAR COVER MTG, NO. 8-32 THD SIZE, 3/4 IN. LG 20-117 (31211)		EA	2	*	*	*	*	*	*	*	*	46	28

	(1) SMR CODE	(2) FEDERAL STOCK NUMBER	(3) DESCRIPTION REF NUMBER & MFR CODE	USABLE ON CODE	(4) UNIT OF MEAS	(5) QTY INC IN UNIT	(6) 30-DAY DS MAINT ALLOWANCE (a) 1-20	(b) 21-50	(c) 51-100	(7) 30-DAY GS MAINT ALLOWANCE (a) 1-20	(b) 21-50	(c) 51-100	(8) 1-YR ALW PER 100 EQUIP CNTGY	(9) DEPOT MAINT ALW PER 100 EQUIP	(10) ILLUSTRATION (a) FIG. NO.	(b) ITEM NO.
C	PAOZZ	5306-168-6385	SCREW, SELF-LOCKING: TERMINAL, NO. 10-24 THD SIZE, 3/4 IN. LG 20-135 (31211)		EA	1	*	*	*	*	*	*	*	*	46	29
C	PAOZZ	2920-477-6107	WIRE, FIELD: INTERNAL 16-28 (31211)		EA	1	*	*	*	*	*	*	*	*	46	30
C	PAOZZ	5310-168-6371	WASHER, FLAT: TERMINAL STUD, 17/64 IN. ID, 9/16 IN. OD 20-109 (31211)		EA	3	*	*	*	*	*	*	*	*	46	31
C	PAOZZ	2920-133-3295	INSULATOR, SCREW 15-7 (31211)		EA	3	*	*	*	*	*	*	*	*	46	32
	XDOZZ		COVER: REAR HOUSING 14-40 (31211)		EA	1									46	33
	PCOZZ	6115-010-2822	GASKET: FELT COVER 3-14 (31211)		EA	1	*	*	*	*	*	*	*	*	46	34
C	PAOZZ	5305-175-5104	SCREW, THREAD FORMING: BRUSH MTG, NO. 8-32 THD SIZE, 1/2 IN. LG 20-116 (31211)		EA	3	*	*	*	*	*	*	*	*	46	35
C	PAOZZ	5970-410-2545	INSULATOR BRUSH: SHUNT LEAD 15-8 (31211)	AB	EA	1	*	*	*	*	*	*	*	*	46	36
C	PAOZZ		SCREW, SELF-LOCKING: BRUSH LEAD: NO. 4-40 THD SIZE, 1/4 IN. LG 20-72 (31211)	AB	EA	2	*	*	*	*	*	*	*	*	46	37
C	PAOZZ	5305-175-5109	SCREW, BRUSH LEAD: NO. 4-40 THD SIZE, 1/4 IN. LG 20-156 (31211)	C	EA	1	*	*	*	*	*	*	*	*	46	37
	PAOZZ	5977-689-6392	BRUSH, ELECTRICAL CONTACT 3-12 (31211)		EA	1	*	*	*	*	*	*	*	*	46	38
C	PAOZZ	5310-173-0116	NUT, PLAIN, HEXAGON: CAPACITOR AND ISOLATION DIODE MTG, 1/4-28 THD SIZE 20-115 (31211)		EA	3	*	*	*	*	*	*	*	*	46	39
C	PAOZZ		CAPACITOR: 10 MFD 2-4 (31211)		EA	1	*	*	*	*	*	*	*	*	46	40
C	PAOZZ	5310-168-6388	WASHER, LOCK: CAPACITOR AND ISOLATION DIODE MTG, 1/4 IN. SCREW SIZE 20-113 (31211)		EA	2	*	*	*	*	*	*	*	*	46	41
C	PAOZZ	5310-168-6360	WASHER, FLAT: ISOLATION DIODE MTG 20-110 (31211)		EA	3	*	*	*	*	*	*	*	*	46	42
C	PAOZZ	5310-456-7172	WASHER, NONMETALLIC: ISOLATION DIODE MTG 15-10 (31211)		EA	1	*	*	*	*	*	*	*	*	46	43
C	PAOZZ	5306-166-1792	CAP, STUD: REAR HOUSING 20-68 (31211)		EA	3	*	*	*	*	*	*	*	*	46	44
	PAOZZ	5310-168-6456	NUT, PLAIN, HEXAGON: TERMINAL STUD, NO. 10-24 THD SIZE 20-119 (31211)	AB	EA	1	*	*	*	*	*	*	*	*	46	45
C	PAOZZ	5306-351-4461	WASHER, FLAT: TERMINAL STUD, 13/64 IN. ID, 7/16 IN. OD 20-54 (31211)	AB	EA	1	*	*	*	*	*	*	*	*	46	46
C	PAOZZ	5970-067-8407	WASHER, NONMETALLIC: TERMINAL SCREW 15-11 (31211)		EA	3	*	*	*	*	*	*	*	*	46	47
C	PAFZZ	5306-166-1382	SCREW, SELF-LOCKING: TERMINAL, NO. 10-24 THD SIZE, 1 1/8 IN. LG 20-180 (31211)		EA	3	*	*	*	*	*	*	*	*	46	48
	PAFZZ	5310-168-6371	WASHER, FLAT: TERMINAL STUD, 17/64 IN. ID, 9/16 IN. OD 20-109 (31211)		EA	1	*	*	*	*	*	*	*	*	46	49

	(1) SMR CODE	(2) FEDERAL STOCK NUMBER	(3) DESCRIPTION REF NUMBER & MFR CODE	USABLE ON CODE	(4) UNIT OF MEAS	(5) QTY INC IN UNIT	(6) 30-DAY DS MAINT ALLOWANCE (a) 1-20	(b) 21-50	(c) 51-100	(7) 30-DAY GS MAINT ALLOWANCE (a) 1-20	(b) 21-50	(c) 51-100	(8) 1-YR ALW PER 100 EQUIP CNTGY	(9) DEPOT MAINT ALW PER 100 EQUIP	(10) ILLUSTRATION (a) FIG. NO.	(b) ITEM NO.
	PAFZZ	2920-133-3295	INSULATOR, SCREW 15-7 (31211)		EA	1	*	*	*	*	*	*	*	*	46	50
N	PAFZZ	5330-402-0234	RETAINER, REAR BEARING: O RING 11-26 (31211) (U/O ALTERNATOR, P/N 8SA3006P (31211), ONLY)	C	EA	1	*	*	*	*	*	*	*	*	46	51
C	PAFZZ	5330-115-6135	RETAINER, REAR BEARING 11-10 (31211)	AB	EA	1	*	*	*	*	*	*	*	*	46	51
C	PAHZZ		NUT, PLAIN, CAP: DIODE MTG, 1/4-28 THD SIZE 20-131 (31211)		EA	2				*	*	*	*	*	46	52
	PAHZZ	5310-168-6388	WASHER, LOCK: DIODE SCREW, 1/4 IN. SCREW SIZE 20-113 (31211)		EA	3				*	*	*	*	*	46	53
	PAHZZ	5310-168-6360	WASHER, FLAT: DIODE SCREW, 1/4 IN. SCREW SIZE 20-110 (31211)		EA	3				*	*	*	*	*	46	54
	PAHZZ	5310-456-7172	WASHER, NONMETALLIC: DIODE MTG 15-10 (31211)		EA	3				*	*	*	*	*	46	55
C	PAHZZ	5306-166-1406	SCREW, CARRIAGE BOLT: DIODE MTG, 1/4-28 THD SIZE, 1 1/2 IN. LG 20-139 (31211)		EA	3				*	*	*	*	*	46	56
C	PAHZZ		TERMINAL, LUG: LEAD 20-70 (31211)	AB	EA	1				*	*	*	*	*	46	57
C	PAHZZ	5970-456-2004	INSULATOR FOR SCREW: DIODE MTG 15-13 (31211)		EA	1				*	*	*	*	*	46	58
C	PAHZZ	5961-222-6082	DIODE, ISOLATION 1-56 (31211)	AB	EA	1				*	*	*	*	*	46	59
	PAHZZ	5961-162-3930	DIODE ASSEMBLY 1-86 (31211) (U/O ALTERNATOR, P/N 8SA3006P (31211), ONLY)	C	EA	1				*	*	*	*	*	46	59
	PAHZZ	5961-018-1295	DIODE, RECTIFYING: NEGATIVE 2-2 (31211)		EA	3				*	*	*	*	*	46	60
	PAHZZ	2920-477-6106	HARNESS ASSEMBLY: DIODE 16-27 (31211)		EA	3				*	*	*	*	*	46	61
	PAHZZ	5915-168-6142	CAPACITOR ASSEMBLY 2-5 (31211)		EA	1				*	*	*	*	*	46	62
	PAHZZ	5306-166-1399	SCREW, SELF-LOCKING: 1/4-28 THD SIZE, 2 1/8 IN. LG 20-138 (31211)		EA	2				*	*	*	*	*	46	63
	PAHZZ	5970-456-2006	INSULATOR, DIODE RING 15-12 (31211)		EA	5				*	*	*	*	*	46	64
	PAHZZ	5961-018-1294	DIODE, RECTIFYING: POSITIVE 2-1 (31211)		EA	3				*	*	*	*	*	46	65
C	PAHZZ		HEAT SINK: RECTIFIER DIODE 1-54 (31211)	AB	EA	1				*	*	*	*	*	46	66
	PAHZZ		HEAT SINK: NEGATIVE 1-85 (31211)	C	EA	1				*	*	*	*	*	46	66
C	PAHZZ		HEAT SINK: RECTIFIER DIODE 1-55 (31211)	AB	EA	1				*	*	*	*	*	46	67
N	PAHZZ		HEAT SINK: POSITIVE 1-84 (31211)	C	EA	1				*	*	*	*	*	46	67
	XAHZZ		STATOR ALTERNATOR 13-13 (31211)		EA	1									46	68
	XAFZZ		HOUSING, REAR 14-38 (31211) (INCLUDING RUSH LEAD WIRE)		EA	1									46	69

(1) SMR CODE	(2) FEDERAL STOCK NUMBER	(3) DESCRIPTION REF NUMBER & MFR CODE	USABLE ON CODE	(4) UNIT OF MEAS	(5) QTY INC IN UNIT	(6) 30-DAY DS MAINT ALLOWANCE (a) 1-20	(b) 21-30	(c) 31-100	(7) 30-DAY GS MAINT ALLOWANCE (a) 1-20	(b) 21-30	(c) 31-100	(8) 1-YR ALW PER 100 EQUIP CNTGY	(9) DEPOT MAINT ALW PER 100 EQUIP	(10) ILLUSTRATION (a) FIG. NO.	(b) ITEM NO.
C PAOZZ	2920-477-6108	REGULATOR: ENGINE GENERATOR 5-57 (31211)	AB	EA	2	*	*	*	*	*	*	*	*		
PAOZZ	6150-486-3493	CABLE ASSEMBLY: REGULATOR 16-71 (31211)		EA	2	*	*	*	*	*	*	*	*		
C MOOZZ		CABLE, RESISTOR: LEAD 16-70 (31211) MANUFACTURE FROM:	AB	EA	1										
C PCOZZ	2920-477-6109	SHIELDED CABLE, 16 GA, SHOF3, AS REQUIRED		FT		*	*	*	*	*	*				
C MOOZZ		CABLE, FIELD SUPPLY 16-69 (31211) MANUFACTURE FROM:	AB	EA	1										
C PCOZZ	2920-177-6109	SHIELDED CABLE, 16 GA, SHOF3, AS REQUIRED		FT		*	*	*	*	*	*				
PAOZZ	5905-221-8099	RESISTOR, EXCITATION 17-10 (31211)		EA	2	*	*	*	*	*	*	*	*		
PAOZZ	5920-251-2486	PROTECTOR: VOLTAGE ALTERNATOR 9-14 (31211)		EA	1	*	*	*	*	*	*	*	*		
C PCOZZ	5975-458-0093	BOOT: DUST AND MOISTURE SEAL 16-31 (31211)	AB	EA	4	*	*	*	*	*	*	*	*		
C PCOZZ	2920-786-5252	LEAD, ELECTRICAL: REGULATOR 5169423 (72582)	AB	EA	1	*	*	*	*	*	*	*	*		
C PCOZZ	5340-456-6979	MOUNT, SHOCK ABSORBER: REGULATOR M595 (70485)		EA	8	*	*	*	*	*	*	*	*		
N XDOZZ		ARM, ADJUSTING: ALTERNATOR 18-25 (31211)	C	EA	1										
N PAOZZ	5310-087-7493	WASHER, FLAT: ALTERNATOR BRACKET, BOTTOM, 3/8 IN. SCREW SIZE MS27183-13 (96906)	C	EA	8	*	*	*	*	*	*	*	*		
N PAOZZ	5305-071-1776	SCREW, CAP, HEXAGON HEAD: ALTERNATOR MTG, 1/2-13 THD SIZE, 4 IN. LG MS90725-123 (96906)	C	EA	2	*	*	*	*	*	*	*	*		
N PAOZZ	5306-225-8497	SCREW, CAP, HEXAGON HEAD: BILGE, PUMP GUARD MTG, 5/16-18 THD SIZE, 3/4 IN. LG MS90725-32 (96906)	C	EA	3	*	*	*	*	*	*	*	*		
N PAOZZ	5310-732-0558	NUT, PLAIN, HEXAGON: ALTERNATOR GUARD, TOP MS51967-18 (96906)	C	EA	2	*	*	*	*	*	*	*	*		
N PAOZZ	5310-768-0318	NUT, PLAIN, HEXAGON: ALTERNATOR MTG, 1/2-13 THD SIZE MS51967-14 (96906)	C	EA	2	*	*	*	*	*	*	*	*		
		GROUP 34 - ELECTRIC CRANKING MOTOR													
R PAOFH	2920-777-3392	MOTOR, CRANKING: ELECTRICAL, RD ENGINE 1108850 (16764)		EA	1	*	*	*	*	*	*	*	*	47	
XBOZZ		COVER, BAND 1906016 (16764)		EA	1									47	1
XBOZZ		BOLT, MACHINE: COMMUTATOR END FRAME MTG 1914869 (16764)		EA	4									47	2
XDOZZ		WASHER, LOCK: COMMUTATOR END FRAME MTG 9421423 (16764)		EA	4									47	3

(1) SMR CODE	(2) FEDERAL STOCK NUMBER	(3) DESCRIPTION REF NUMBER & MFR CODE	USABLE ON CODE	(4) UNIT OF MEAS	(5) QTY INC IN UNIT	(6) 30-DAY DS MAINT ALLOWANCE (a) 1-20	(b) 21-50	(c) 51-100	(7) 30-DAY GS MAINT ALLOWANCE (a) 1-20	(b) 21-50	(c) 51-100	(8) 1-YR ALW PER 100 EQUIP CNTGY	(9) DEPOT MAINT ALW PER 100 EQUIP	(10) ILLUSTRATION (a) FIG. NO.	(b) ITEM NO.
XAFZZ		COMMUTATOR, END FRAME 1907464 (16764)		EA	1									47	4
PAOZZ	4730-011-8831	PLUG, PIPE 118831 (16764)		EA	1	*	*	*	*	*	*	*	*	47	
PAFZZ	3120-456-6928	BEARING, SLEEVE 1930232 (16764)		EA	1	*	*	*	*	*	*	*	*	47	5
PAOZZ	5340-282-1668	PLUG, END 453894 (16764)		EA	1	*	*	*	*	*	*	*	*	47	6
XDOZZ		WICK 1916439 (16764)		EA	1									47	
XBOZZ		NUT, PLAIN, HEXAGON: TERMINAL STUD, 7/16 IN, THK 9413509 (16764)		EA	1									47	7
XBOZZ		WASHER, LOCK: FIELD TERMINAL STUD 9421427 (16764)		EA	2									47	8
XBOZZ		NUT, PLAIN, HEXAGON: TERMINAL STUD, 5/16 IN, THK 8414418 (16764)		EA	1									47	9
XBOZZ		WASHER: FIELD TERMINAL STUD 811912 (16764)		EA	2									47	10
PAOZZ	5970-486-8421	INSULATOR, BRUSH PLATE 1907471 (16764)		EA	1	*	*	*	*	*	*	*	*	47	11
PAOZZ	5305-889-3002	SCREW, MACHINE: BRUSH LEAD MS35206-242 (96906)		EA	8	*	*	*	*	*	*	*	*	47	12
PAOZZ	5310-999-2294	WASHER, LOCK: BRUSH LEAD, ATTACHING SCREW 453844 (16764)		EA	8	*	*	*	*	*	*	*	*	47	13
PAOZZ	5977-237-1596	BRUSH, ELECTRICAL CONTACT 1906902 (16764)		EA	8	*	*	*	*	*	*	*	*	47	14
PAFZZ	5305-984-6193	SCREW, BRUSH PLATE MS35206-245 (96906)		EA	3	*	*	*	*	*	*	*	*	47	15
XBFZZ		WASHER, BRUSH PLATE 1913086 (16764)		EA	3									47	16
XDFZZ		PLATE ASSEMBLY 1907466 (16764)		EA	1									47	17
PAOZZ	5305-796-1719	SCREW, BRUSH HOLDER 1960856 (16764)		EA	2	*	*	*	*	*	*	*	*	47	18
PAOZZ	5310-045-3296	WASHER, LOCK: BRUSH HOLDER MS35338-43 (96906)		EA	8	*	*	*	*	*	*	*	*	47	19
PAOZZ	5305-363-3582	SCREW, BRUSH HOLDER: LONG, INSULATED 1904982 (16764)		EA	2	*	*	*	*	*	*	*	*	47	20
R PAOZZ	5360-734-8954	SPRING, BRUSH 1904981 (16764)		EA	8	*	*	*	*	*	*	*	*	47	21
XDOZZ		BRUSH HOLDER 1907475 (16764)		EA	4									47	22
PAOZZ	5970-496-9859	BUSHING, INSULATING: TERMINAL STUD 1931680 (16764)		EA	1	*	*	*	*	*	*	*	*	47	23
XDFZZ		WASHER, BRAKE SHOE 1856819 (16764)		EA	1									47	24
XAFZZ		PLATE AND STUD BRUSH 1907467 (16764)		EA	1									47	
XDFZZ		PLATE, INSULATING 1907472 (16764)		EA	1									47	

(1) SMR CODE	(2) FEDERAL STOCK NUMBER	(3) DESCRIPTION REF NUMBER & MFR CODE	USABLE ON CODE	(4) UNIT OF MEAS	(5) QTY INC IN UNIT	(6) 30-DAY DS MAINT ALLOWANCE (a) 1-20	(b) 21-50	(c) 51-100	(7) 30-DAY GS MAINT ALLOWANCE (a) 1-20	(b) 21-50	(c) 51-100	(8) 1-YR ALW PER 100 EQUIP CNTGY	(9) DEPOT MAINT ALW PER 100 EQUIP	(10) ILLUSTRATION (a) FIG. NO.	(b) ITEM NO
XAFZZ		PLATE, INSULATING 1874851 (16764)		EA	1									47	
XAFZZ		PLATE, SPACE BRUSH HOLDER 1907473 (16764)		EA	2									47	
XDFZZ		PLATE, INSULATING BRUSH HOLDER 1965093 (16764)		EA	2									47	
PAOZZ	5305-371-5138	SCREW, BRUSH HOLDER 1928500 (16764)		EA	2	*	*	*	*	*	*	*	*	47	
PAOZZ	5305-105-1207	SCREW, BRUSH HOLDER 1914580 (16764)		EA	2	*	*	*	*	*	*	*	*	47	
XBOZZ		WASHER, FLAT 1913080 (16764)		EA	4									47	
XAFZZ		PLATE, BRUSH HOLDER SUPPORT 1874847 (16764)		EA	1									47	
PAOZZ		SCREW, CAP, SELF-LOCKING 454336 (16764)		EA	12	*	*	*	*	*	*	*	*	47	25
XBOZZ		WASHER, LOCK: DRIVE HOUSING 9421423 (16764)		EA	12									47	26
PAFZZ	5305-614-0247	SCREW, CAP, HEXAGON HEAD: CENTER BEARING MS35266-64 (96906)		EA	6	*	*	*	*	*	*	*	*	47	27
PAFZZ	5310-476-7648	WASHER, LOCK: CENTER BEARING 453435 (16764)		EA	6	*	*	*	*	*	*	*	*	47	28
XDFZZ		HOUSING, MOTOR DRIVE 1907491 (16764)		EA	1									47	29
PAFZZ	3120-294-0701	BEARING: DRIVE END 1926299 (16764)		EA	1	*	*	*	*	*	*	*	*	47	30
PAOZZ	4730-011-8831	PLUG, PIPE: DRIVE END 118831 (16764)		EA	1	*	*	*	*	*	*	*	*	47	
XDFZZ		PLATE ASSEMBLY: CENTER BEARING 1912383 (16764)		EA	1									47	31
PCFZZ	5330-456-6966	SEAL, PLAIN, ENCASED 1912384 (16764)		EA	1	*	*	*	*	*	*	*	*	47	32
PAFZZ	3120-661-6763	BEARING, SLEEVE: CENTER BEARING 1907462 (16764)		EA	1	*	*	*	*	*	*	*	*	47	33
PAOZZ	4730-011-8831	PLUG, PIPE: CENTER BEARING 118831 (16764)		EA	1	*	*	*	*	*	*	*	*	47	
XDFZZ		WICK: CENTER BEARING 1907494 (16764)		EA	1									47	
PCFZZ	5330-974-9940	GASKET: CENTER BEARING 1912385 (16764)		EA	1	*	*	*	*	*	*	*	*	47	34
XDFZZ		WASHER, SPACER THRUST 1907495 (16764)		EA	1									47	35
PAOZZ	2920-652-7998	DRIVE, BENDIX 1938993 (16764)		EA	1	*	*	*	*	*	*	*	*	47	36
XAHZZ		ARMATURE 1907461 (16764)		EA	1									47	37
PAHZZ	5305-957-2644	SCREW, SELF-LOCKING: POLE SHOE MS35191-318 (96906)		EA	8				*	*	*	*	*	47	38
XDOZZ		VENTILATOR 1928510 (16764)		EA	2									47	39
XBOZZ		NUT, PLAIN, HEXAGON: TERMINAL STUD, 7/16 IN. THK 9413509 (16764)		EA	1									47	40
XBOZZ		WASHER, LOCK: TERMINAL STUD 9421427 (16764)		EA	2									47	41

(1) SMR CODE	(2) FEDERAL STOCK NUMBER	(3) DESCRIPTION REF NUMBER & MFR CODE / USABLE ON CODE	(4) UNIT OF MEAS	(5) QTY INC IN UNIT	(6) 30-DAY DS MAINT ALLOWANCE (a) 1-20	(b) 21-50	(c) 51-100	(7) 30-DAY GS MAINT ALLOWANCE (a) 1-20	(b) 21-50	(c) 51-100	(8) 1-YR ALW PER 100 EQUIP CNTGY	(9) DEPOT MAINT ALW PER 100 EQUIP	(10) ILLUSTRATION (a) FIG. NO.	(b) ITEM NO.
XBOZZ		NUT, PLAIN, HEXAGON: TERMINAL STUD, 5/16 IN. THK 9414418 (16764)	EA	1									47	42
XDOZZ		INSULATOR, TERMINAL STUD 1931671 (16764)	EA	1									47	43
XDHZZ		BUSHING, INSULATING 1931680 (16764)	EA	1									47	44
XBHZZ		WASHER, FLAT 1861791 (16764)	EA	1									47	45
XBHZZ		WASHER, FLAT: TERMINAL STUD 811912 (16764)	EA	1									47	46
XBHZZ		INSULATION, STRIP 1907508 (16764)	EA	1									47	
XDHZZ		SCREW, CAP, HEXAGON HEAD: FIELD TERMINAL 1906063 (16764)	EA	1									47	48
XDHZZ		SHOE, POLE 1907482 (16764)	EA	4									47	49
XDHZZ		COIL, FIELD 1907496 (16764)	EA	1									47	50
XDHZZ		COIL, FIELD 1907497 (16764)	EA	1									47	51
XDHZZ		INSULATION, STRIP 1907599 (16764)	EA	2									47	52
XDHZZ		INSULATION, STRIP 1907600 (16764)	EA	4									47	53
XDOZZ		WASHER, FLAT 1907474 (16764)	EA	2									47	
PAOZZ	5970-606-8321	INSULATOR, TERMINAL STUD 1931671 (16764)	EA	1	*	*	*	*	*	*	*	*	47	
XDOZZ		COLLAR, SPACER 1912387 (16764)	EA	1									47	
XBOZZ		WASHER, SPACER 1912386 (16764)	EA	1									47	
XBOZZ		WASHER, SPACER, STEEL 1907507 (16764)	EA	1									47	
PAOFH	2920-640-7462	MOTOR, CRANKING: ELECTRICAL, LS ENGINE 1108890 (16764)	EA	1	*	*	*	*	*	*	*	*	48	
XBOZZ		COVER, BAND 1906016 (16764)	EA	1									48	1
XBOZZ		SCREW, CAP, HEXAGON HEAD: COMMUTATOR END FRAME MTG 1907613 (16764)	EA	4									48	2
XDOZZ		WASHER, LOCK: COMMUTATOR END FRAME MTG 1904988 (16764)	EA	4									48	3
XAFZZ		COMMUTATOR END FRAME 1907464 (16764)	EA	1									48	4
PAOZZ	4730-011-8831	PLUG, PIPE 118831 (16764)	EA	1	*	*	*	*	*	*	*	*	48	
PAFZZ	3120-456-6928	BEARING, SLEEVE 1930232 (16764)	EA	1	*	*	*	*	*	*	*	*	48	5
PAOZZ	5340-282-1668	PLUG, END 453894 (16764)	EA	1	*	*	*	*	*	*	*	*	48	6
XDOZZ		WICK 1916439 (16764)	EA	1										

(1) SMR CODE	(2) FEDERAL STOCK NUMBER	(3) DESCRIPTION — REF NUMBER & MFR CODE	USABLE ON CODE	(4) UNIT OF MEAS	(5) QTY INC IN UNIT	(6) 30-DAY DS MAINT ALLOWANCE (a) 1-20	(b) 21-50	(c) 51-100	(7) 30-DAY GS MAINT ALLOWANCE (a) 1-20	(b) 21-50	(c) 51-100	(8) 1-YR ALW PER 100 EQUIP CNTGY	(9) DEPOT MAINT ALW PER 100 EQUIP	(10) ILLUSTRATION (a) FIG. NO.	(b) ITEM NO.
XBOZZ		NUT, PLAIN, HEXAGON: TERMINAL STUD MS35691-805 (96906)		EA	1									48	7
XBOZZ		WASHER, LOCK: TERMINAL STUD 1914648 (16764)		EA	2									48	8
XBOZZ		NUT, PLAIN, HEXAGON: TERMINAL STUD MS35690-805 (96906)		EA	1									48	9
XBOZZ		WASHER, FLAT: TERMINAL STUD 1904998 (16764)		EA	1									48	10
PAOZZ	5970-486-8421	INSULATOR, BRUSH PLATE 1907471 (16764)		EA	1	*	*	*	*	*	*	*	*	48	11
PAOZZ	5305-984-6191	SELF, SELF-LOCKING: BRUSH LEAD, NO. 8-32 THD SIZE, 3/8 IN. LG MS35206-243 (96906)		EA	8	*	*	*	*	*	*	*	*	48	12
PAOZZ	5310-045-3299	WASHER, LOCK: BRUSH LEAD, NO. 8 SCREW SIZE MS35338-42 (96906)		EA	8	*	*	*	*	*	*	*	*	48	13
PAOZZ	5977-237-1596	BRUSH, ELECTRICAL CONTACT 1906902 (16764)		EA	8	*	*	*	*	*	*	*	*	48	14
PAFZZ	5305-984-6193	SCREW, SELF-LOCKING: BRUSH PLATE, NO. 8-32 THD SIZE, 1/2 IN. LG MS35206-245 (96906)		EA	3	*	*	*	*	*	*	*	*	48	15
XBFZZ		WASHER, BRUSH PLATE MS27183-7 (96906)		EA	3									48	16
XDFZZ		PLATE ASSEMBLY 1907466 (16764)		EA	1									48	17
PAOZZ	5305-543-2753	SCREW, SELF-LOCKING: BRUSH HOLDER MS35266-61 (96906)		EA	2	*	*	*	*	*	*	*	*	48	18
PAOZZ	5310-045-3296	WASHER, LOCK: BRUSH HOLDER MS35338-43 (96906)		EA	8	*	*	*	*	*	*	*	*	48	19
PAOZZ	5305-363-3582	SCREW, SELF-LOCKING: BRUSH HOLDER 1904982 (16764)		EA	5	*	*	*	*	*	*	*	*	48	20
PAOZZ	5360-734-8954	SPRING, BRUSH 1904981 (16764)		EA	8	*	*	*	*	*	*	*	*	48	21
XDOZZ		HOLDER, BRUSH 1907475 (16764)		EA	4									48	22
PAOZZ	5970-496-9859	BUSHING, INSULATING: TERMINAL STUD 1931680 (16764)		EA	1	*	*	*	*	*	*	*	*	48	23
XDFZZ		WASHER, BRAKE SHOE 1856819 (16764)		EA	1									48	24
XAFZZ		PLATE AND STUD BRUSH 1907467 (16764)		EA	1									48	
XDFZZ		PLATE, INSULATING: BRUSH PLATE 1907472 (16764)		EA	1									48	
XAFZZ		PLATE, SPACER 1874851 (16764)		EA	2									48	
XAFZZ		PLATE, SPACER: BRUSH HOLDER 1907473 (16764)		EA	2									48	
XDFZZ		PLATE, INSULATING: BRUSH HOLDER 1965093 (16764)		EA	2									48	
PAOZZ	5305-371-5138	SCREW, SELF-LOCKING: BRUSH HOLDER 1908698 (16764)		EA	2	*	*	*	*	*	*	*	*	48	
PAOZZ	5305-614-0247	SCREW, SELF-LOCKING: BRUSH HOLDER MS35266-64 (96906)		EA	2	*	*	*	*	*	*	*	*	48	
XBOZZ		WASHER, FLAT 1913080 (16764)		EA	4									48	

(1) SMR CODE	(2) FEDERAL STOCK NUMBER	(3) DESCRIPTION REF NUMBER & MFR CODE	USABLE ON CODE	(4) UNIT OF MEAS	(5) QTY INC IN UNIT	(6) 30-DAY DS MAINT ALLOWANCE (a) 1-20	(b) 21-50	(c) 51-100	(7) 30-DAY GS MAINT ALLOWANCE (a) 1-20	(b) 21-50	(c) 51-100	(8) 1-YR ALW PER 100 EQUIP CNTGY	(9) DEPOT MAINT ALW PER 100 EQUIP	(10) ILLUSTRATION (a) FIG. NO.	(b) ITEM NO.
XAFZZ		PLATE: BRUSH HOLDER SUPPORT 1874847 (16764)		EA	1									48	
PAOZZ	5305-005-0837	SCREW, SELF-LOCKING 1907477 (16764)		EA	12	*	*	*	*	*	*	*	*	48	25
XBOZZ		WASHER, LOCK: DRIVE HOUSING 1904988 (16764)		EA	12									48	26
PAFZZ	5305-614-0247	SCREW, CAP, HEXAGON HEAD: CENTER BEARING MS35266-64 (96906)		EA	6	*	*	*	*	*	*	*	*	48	27
PAFZZ	5310-045-3296	WASHER, LOCK: CENTER BEARING MS35338-43 (96906)		EA	6	*	*	*	*	*	*	*	*	48	28
XDFZZ		HOUSING, MOTOR DRIVE 1907491 (16764)		EA	1									48	29
PAFZZ	3120-294-0701	BEARING: DRIVE END 1926299 (16764)		EA	1	*	*	*	*	*	*	*	*	48	30
PAOZZ	4730-011-8831	PLUG, PIPE: DRIVE END 118831 (16764)		EA	1	*	*	*	*	*	*	*	*	48	
XDFZZ		WICK: DRIVE END 802696 (16764)		EA	1									48	
XDFZZ		PLATE ASSEMBLY: CENTER BEARING 1912383 (16764)		EA	1									48	31
PCFZZ	5330-456-6966	SEAL, PLAIN, ENCASED 1912384 (16764)		EA	1	*	*	*	*	*	*	*	*	48	32
PAFZZ	3120-661-6763	BEARING, SLEEVE: CENTER BEARING 1907462 (16764)		EA	1	*	*	*	*	*	*	*	*	48	33
PAOZZ	4730-011-8831	PLUG, PIPE: CENTER BEARING 118831 (16764)		EA	1	*	*	*	*	*	*	*	*	48	
XDFZZ		WICK: CENTER BEARING 1907494 (16764)		EA	1									48	
PCFZZ	5330-974-9940	GASKET: CENTER BEARING 1912385 (16764)		EA	1	*	*	*	*	*	*	*	*	48	34
XDFZZ		WASHER, SPACER: DRIVE END THRUST 1907495 (16764)		EA	1									48	35
PAOZZ	2920-398-9830	DRIVE, BENDIX A3163 (72850)		EA	1	*	*	*	*	*	*	*	*	48	36
XAHZZ		ARMATURE 1907461 (16764)		EA	1									48	37
PAHZZ	5305-957-2644	SCREW, CAP: POLE SHOE MS35191-318 (96906)		EA	8				*	*	*	*	*	48	38
XDOZZ		VENTILATOR, FIELD FRAME 1928510 (16764)		EA	2									48	39
XBOZZ		NUT, PLAIN, HEXAGON: FIELD TERMINAL MS35691-805 (96906)		EA	1									48	40
XBOZZ		WASHER, LOCK: FIELD TERMINAL, 1/2 IN. SCREW SIZE FFW84CLASSASTYLE2 (81348)		EA	2									48	41
XBOZZ		NUT, PLAIN, HEXAGON: FIELD TERMINAL MS35690-805 (96906)		EA	1									48	42
XDOZZ		INSULATOR: FIELD TERMINAL STUD 1931671 (16764)		EA	1									48	43
XDHZZ		BUSHING, INSULATING 1931678 (16764)		EA	1									48	44

(1) SMR CODE	(2) FEDERAL STOCK NUMBER	(3) DESCRIPTION REF NUMBER & MFR CODE	USABLE ON CODE	(4) UNIT OF MEAS	(5) QTY INC IN UNIT	(6) 30-DAY DS MAINT ALLOWANCE (a) 1-20	(b) 21-50	(c) 51-100	(7) 30-DAY GS MAINT ALLOWANCE (a) 1-20	(b) 21-50	(c) 51-100	(8) 1-YR ALW PER 100 EQUIP CNTGY	(9) DEPOT MAINT ALW PER 100 EQUIP	(10) ILLUSTRATION (a) FIG. NO.	(b) ITEM NO.
XBHZZ		WASHER, INSULATING: FIELD TERMINAL 1931679 (16764)		EA	1									48	45
XBHZZ		WASHER: FIELD TERMINAL STUD 1904998 (16764)		EA	2									48	46
XBHZZ		INSULATION 1907508 (16764)		EA	1									48	47
XDHZZ		STUD: FIELD TERMINAL 1906063 (16764)		EA	1									48	48
XDHZZ		SHOE, POLE 1946964 (16764)		EA	4									48	49
XAHZZ		COIL, FIELD: RH 1916584 (16764)		EA	1									48	50
XDHZZ		COIL, FIELD: LH 1916585 (16764)		EA	1									48	51
XDHZZ		INSULATION, FIELD: COIL 1907599 (16764)		EA	2									48	52
XDHZZ		INSULATION, STRIP 1907600 (16764)		EA	4									48	53
XDOZZ		WASHER, INSULATING: TERMINAL STUD, COMMUTATOR END, 7/8 IN. OD 1907474 (16764)		EA	2									48	
PAOZZ	5970-606-8321	INSULATOR: TERMINAL STUD 1931671 (16764)		EA	1	*	*	*	*	*	*	*	*	48	
XDOZZ		COLLAR, SPACER 1912387 (16764)		EA	1									48	
XBOZZ		WASHER, SPACER 1912386 (16764)		EA	1									48	
XBOZZ		WASHER, SPACER, STEEL 1907507 (16764)		EA	1									48	
PAOZZ	5310-734-8923	WASHER, LOCK: BRUSH LEAD 1914107 (16764)		EA	3	*	*	*	*	*	*	*	*	48	
PAOZZ	5310-734-8905	WASHER, FLAT 1904987 (16764)		EA	4	*	*	*	*	*	*	*	*	48	
XDFZZ		WASHER: DRIVE HOUSING 1904987 (16764)		EA	12									48	
PAOZZ	2920-276-9263	RELAY, SOLENOID: STARTING MOTOR 1118092 (72582)	A	EA	1	*	*	*	*	*	*	*	*	48	
PAOZZ	5305-068-0505	SCREW, CAP, HEXAGON HEAD: RELAY MTG MS90726-5 (96906)	A	EA	4	*	*	*	*	*	*	*	*	48	
PAOZZ	5310-637-9541	WASHER, LOCK: STARTER RELAY MTG MS35338-46 (96906)	A	EA	4	*	*	*	*	*	*	*	*	48	
PAOZZ	5310-809-4058	WASHER, STARTER MS27183-10 (96906)	A	EA	4	*	*	*	*	*	*	*	*	48	
PAOZZ	5310-297-8836	NUT, PLAIN, HEXAGON: STARTER RELAY MTG 122161 (72582)	A	EA	4	*	*	*	*	*	*	*	*	48	
XDOZZ		BRACKET, STARTER: RELAY MTG 5132866 (72582)	A	EA	1									48	
PAOZZ	5306-637-9623	BOLT, MACHINE: 3/8-16 THD SIZE, 4 IN. LG 186285 (72582)		EA	4	*	*	*	*	*	*	*	*	48	
PAOZZ	5310-261-7340	WASHER, LOCK: 3/8 IN. MS35338-8 (96906)	A	EA	4	*	*	*	*	*	*	*	*	48	

(1) SMR CODE	(2) FEDERAL STOCK NUMBER	(3) DESCRIPTION REF NUMBER & MFR CODE	USABLE ON CODE	(4) UNIT OF MEAS	(5) QTY INC IN UNIT	(6) 30-DAY DS MAINT ALLOWANCE (a) 1-20	(b) 21-50	(c) 51-100	(7) 30-DAY GS MAINT ALLOWANCE (a) 1-20	(b) 21-50	(c) 51-100	(8) 1-YR ALW PER 100 EQUIP CNTGY	(9) DEPOT MAINT ALW PER 100 EQUIP	(10) ILLUSTRATION (a) FIG. NO.	(b) ITEM NO.
		GROUP 35 - HYDRAULIC STARTING PIPING SYSTEM													
PAOZZ	6685-045-3211	GAGE, PRESS; ACCUMULATOR GG200656 (96906)	A	EA	2	*	*	*	*	*	*	*	*	49	1
MOOZZ		HOSE; ACCUMULATOR TO SOLENOID VALVE, 108 IN. LG MMC60-58 (98042) MANUFACTURE FROM:	A	EA	1									49	2
PCOZZ	4720-289-2615	HOSE, 3/8 IN. ID, 9 FT REQUIRED		FT		*	*	*	*	*	*			49	
MOOZZ		HOSE; 6 FT LG MMC60-62 (98042) MANUFACTURE FROM:	A	EA	2									49	3
PCOZZ	4720-067-0454	HOSE, 1/2 IN. ID, 6 FT REQUIRED 1503-8 (01276)		FT		*	*	*	*	*	*			49	
MOOZZ		HOSE; 5 FT, 4 IN. LG MMC60-56 (98042) MANUFACTURE FROM:	A	EA	1									49	4
PCOZZ	4720-289-2615	HOSE, 3/8 IN. ID, 5 FT, 4 IN. REQUIRED		FT		*	*	*	*	*	*			49	
MOOZZ		HOSE; 18 IN. LG MMC60-52 (98042) MANUFACTURE FROM:	A	EA	1									49	5
PCOZZ	4720-289-2615	HOSE, 3/8 IN. ID, 18 IN. REQUIRED		FT		*	*	*	*	*	*			49	
MOOZZ		HOSE; 4 FT, 8 IN. LG MMC60-55 (98042) MANUFACTURE FROM:	A	EA	1									49	6
PCOZZ	4720-289-2615	HOSE, 3/8 IN. ID, 4 FT, 8 IN. REQUIRED		FT		*	*	*	*	*	*			49	
MOOZZ		HOSE; 9 FT LG MMC60-63 (98042) MANUFACTURE FROM:	A	EA	1									49	7
PCOZZ	4720-067-0454	HOSE, 1/2 IN. LG, 9 FT REQUIRED		FT		*	*	*	*	*	*			49	
MOOZZ		HOSE; 3¼ IN. LG MMC60-66 (98042) MANUFACTURE FROM:	A	EA	1									49	8
PCOZZ	4720-289-2615	HOSE, 3/8 IN. ID, 3¼ IN. REQUIRED 1503-6 (01276)		FT		*	*	*	*	*	*			49	
MOOZZ		HOSE; 23 IN. LG MMC60-53 (98042) MANUFACTURE FROM:	A	EA	1									49	9
PCOZZ	4720-289-2615	HOSE, 26 IN. REQUIRED 1503-6 (01276)		FT		*	*	*	*	*	*			49	
MOOZZ		HOSE; 31 IN. LG MMC60-54 (98042) MANUFACTURE FROM:	A	EA	1									49	10
PCOZZ	4720-289-2615	HOSE, 31 IN. REQUIRED 1503-6 (01276)		FT		*	*	*	*	*	*			49	
MOOZZ		HOSE, RUBBER; STARTER TO RETURN TEE MMC60-67 (98042) MANUFACTURE FROM:	A	EA	1									49	11
PCOZZ	4720-541-8859	HOSE, 3/4 IN. ID, 9 FT REQUIRED 2556-12 (00624)		FT		*	*	*	*	*	*			49	
MOOZZ		HOSE; 4 IN. LG MMC60-57 (98042) MANUFACTURE FROM:	A	EA	1									49	12
PCOZZ	4720-289-2615	HOSE, 3/8 IN. ID, 4 IN. REQUIRED		FT		*	*	*	*	*	*			49	

(1) SMR CODE	(2) FEDERAL STOCK NUMBER	(3) DESCRIPTION REF NUMBER & MFR CODE	USABLE ON CODE	(4) UNIT OF MEAS	(5) QTY INC IN UNIT	(6) 30-DAY DS MAINT ALLOWANCE (a) 1-20	(b) 21-50	(c) 51-100	(7) 30-DAY GS MAINT ALLOWANCE (a) 1-20	(b) 21-50	(c) 51-100	(8) 1-YR ALW PER 100 EQUIP CNTGY	(9) DEPOT MAINT ALW PER 100 EQUIP	(10) ILLUSTRATION (a) FIG. NO.	(b) ITEM NO.
MOOZZ		HOSE: 43 IN. LG MMC60-61 (98042) MANUFACTURE FROM:	A	EA	1									49	13
PCOZZ	4720-541-8859	HOSE, 3 FT, 7 IN. REQUIRED 2556-12 (00624)		FT		*	*	*	*	*	*			49	
MOOZZ		HOSE: 17 IN. LG MMC60-65 (98042) MANUFACTURE FROM:	A	EA	1									49	14
PCOZZ	4720-541-8859	HOSE, 17 IN. REQUIRED 2556-12 (00624)		FT		*	*	*	*	*	*			49	
MOOZZ		HOSE: 162 IN. LG MMC60-64 (98042) MANUFACTURE FROM:	A	EA	1									49	15
PCOZZ	4720-067-0454	HOSE, 1/2 IN. ID, 13 FT, 6 IN. REQUIRED 1503-8 (01276)		FT		*	*	*	*	*	*			49	
MOOZZ		HOSE: 21 IN. LG MMC60-60 (98042) MANUFACTURE FROM:	A	EA	1									49	16
PCOZZ	4720-067-0454	HOSE, 1/2 IN. ID, 21 IN. REQUIRED 1503-8 (01276)		FT		*	*	*	*	*	*			49	
MOOZZ		HOSE: 9 IN. LG MMC60-59 (98042) MANUFACTURE FROM:	A	EA	1									49	17
PCOZZ	4720-067-0454	HOSE, 1/2 IN. ID, 9 IN. REQUIRED 1503-8 (01276)		FT		*	*	*	*	*	*			49	
XDOZZ		PLUG, PIPE: HAND PUMP 2082-4S (01276)	A	EA	1									49	18
PAOZZ	4820-227-0169	VALVE: GLOBE, 3/8 IN. PIPE SIZE, 125 LB, SCREWED 1 (14959)	A	EA	2	*	*	*	*	*	*	*	*	49	19
PAOZZ	4820-241-4431	VALVE, CHECK: INLET 3C12-3-3 (96259)	A	EA	2	*	*	*	*	*	*	*	*	49	20
PAOZZ	4820-322-8566	VALVE, HAND: ACCUMULATOR 1900FFG3-8IN (38508)	A	EA	2	*	*	*	*	*	*	*	*	49	21
PAOZZ	4820-075-1862	VALVE, NEEDLE: HAND PUMP 1900FFG1-4IN (38508)	A	EA	1	*	*	*	*	*	*	*	*	49	22
XDOZZ		REDUCER, BUSHING 2021-6-6S (01276)	A	EA	2									49	23
XDOZZ		REDUCER, PIPE 2021-6-8S (01276)	A	EA	2									49	24
XDOZZ		ELBOW, PIPE: 90 DEG 2024-6-6S (01276)	A	EA	7									49	25
XDOZZ		ELBOW, PIPE: 90 DEG 2024-6-8S (01276)	A	EA	2									49	26
XDOZZ		CROSS, PIPE 2080-6-6S (01276)	A	EA	2									49	27
XDOZZ		ELBOW, PIPE: 90 DEG 2025-6-8S (01276)	A	EA	2									49	28
XDOZZ		TEE, PIPE 2030-6-8S (01276)	A	EA	1									49	29
XDOZZ		BUSHING, PIPE 2081-12-6S (01276)	A	EA	4									49	30
XDOZZ		NIPPLE, PIPE: HAND PUMP 2083-6-4S (01276)	A	EA	1									49	31
XDOZZ		NIPPLE, PIPE 2083-6-6S (01276)	A	EA	15									49	32

(1) SMR CODE	(2) FEDERAL STOCK NUMBER	(3) DESCRIPTION REF NUMBER & MFR CODE	USABLE ON CODE	(4) UNIT OF MEAS	(5) QTY INC IN UNIT	(6) 30-DAY DS MAINT ALLOWANCE (a) 1-20	(b) 21-50	(c) 51-100	(7) 30-DAY GS MAINT ALLOWANCE (a) 1-20	(b) 21-50	(c) 51-100	(8) 1-YR ALW PER 100 EQUIP CNTGY	(9) DEPOT MAINT ALW PER 100 EQUIP	(10) ILLUSTRATION (a) FIG. NO.	(b) ITEM NO.
XDOZZ		NIPPLE, HEXAGON: HYDRAULIC PUMP 2083-2-2S (01276)	A	EA	2									49	33
XDOZZ		ELBOW, PIPE 2089-6-6S (01276)	A	EA	3									49	34
XDOZZ		TEE, PIPE 2090-6-6S (01276)	A	EA	7									49	35
XDOZZ		TEE, PIPE 2092-6-6S (01276)	A	EA	3									49	36
XDOZZ		CONNECTOR, HOSE 4721-6S (01276)	A	EA	10									49	37
XDOZZ		CONNECTOR, HOSE 4722-6S (01276)	A	EA	10									49	38
XDOZZ		CONNECTOR, HOSE: SWIVEL ENDS 4741-12B (01276)	A	EA	1									49	39
XDOZZ		CONNECTOR, HOSE 4412-6-8S (01276)		EA	7									49	40
XDOZZ		CONNECTOR, HOSE 4411-6S (01276)	A	EA	2									49	41
XDOZZ		CONNECTOR, HOSE: SWIVEL, 3/4 IN. 4741-12B (01276)	A	EA	2									49	42
XDOZZ		CONNECTOR, HOSE 4412-4-6S (01276)	A	EA	2									49	43
XDOZZ		NUT, TUBE 221000-6S (01276)	A	EA	2									49	44
XDOZZ		BUSHING, PIPE 2081-6-4S (01276)	A	EA	2									49	45
XDOZZ		TEE, PIPE 2090-6-6S (01276)	A	EA	2									49	46
XDOZZ		PLUG, PIPE HEXAGON 2082-6S (01276)	A	EA	1									49	47
XDOZZ		BUSHING, PIPE 2081-6-2S (01276)	A	EA	2									49	48
XDOZZ		ELBOW, PIPE 2024-4-6S (01276)	A	EA	5									49	49
XDOZZ		BUSHING, PIPE: STARTING MOTOR 2081-8-6S (01276)	A	EA	2									49	50
XDOZZ		REDUCER, TUBE 6-5TRBTXS (08752)	A	EA	1									49	51
XDOZZ		ADAPTER, STRAIGHT 6-6FBTXS (08752)	A	EA	1									49	52
XDOZZ		ELBOW, TUBE 4EBTXS (08752)	A	EA	1									49	53
XDOZZ		ADAPTER, STRAIGHT: PIPE TO TUBE 4-4GBTXS (08752)	A	EA	1									49	54
XDOZZ		NIPPLE, PIPE 2083-6-4S (01276)	A	EA	2									49	55
XDOZZ		CONNECTOR, PIPE 2458J04 (30327)	A	EA	2									49	56
XDOZZ		ADAPTER, STRAIGHT: MOTOR OUTLET 2021-8-12S (01276)	A	EA	1									49	57
PAOZZ	6685-045-3211	GAGE, PRESSURE: ACCUMULATOR GG200656 (96906)	BC	EA	2	*	*	*	*	*	*	*	*	50	1

(1) SMR CODE	(2) FEDERAL STOCK NUMBER	(3) DESCRIPTION REF NUMBER & MFR CODE	USABLE ON CODE	(4) UNIT OF MEAS	(5) QTY INC IN UNIT	(6) 30-DAY DS MAINT ALLOWANCE (a) 1-20	(b) 21-50	(c) 51-100	(7) 30-DAY GS MAINT ALLOWANCE (a) 1-20	(b) 21-50	(c) 51-100	(8) 1-YR ALW PER 100 EQUIP CNTGY	(9) DEPOT MAINT ALW PER 100 EQUIP	(10) ILLUSTRATION (a) FIG. NO.	(b) ITEM NO.
MOOZZ		HOSE, RUBBER: PUMP OUTLET, 3/16 IN. ID 77-8-206 (26571) MANUFACTURE FROM:	B	EA	1									50	2
PCOZZ	4720-639-9907	HOSE, 3/16 IN. ID, AS REQUIRED MIL-H-79 SIZE 4 (81349)		FT		*	*	*	*	*	*			50	
MOOZZ		HOSE, RUBBER: 3/8 IN. ID 77-10-206 (26571) MANUFACTURE FROM:	B	EA	1									50	3
PCOZZ	4730-289-2615	HOSE, 3/8 IN. ID, AS REQUIRED		FT		*	*	*	*	*	*			50	
MOOZZ		HOSE, RUBBER: 3/8 IN. ID MANUFACTURE FROM:	B	EA	1									50	4
PCOZZ	4730-289-2615	HOSE, 3/8 IN. ID, AS REQUIRED		FT		*	*	*	*	*	*			50	
MOOZZ		HOSE: HAND PUMP, INLET, 3/8 IN. ID 77AAA-206 (26571) MANUFACTURE FROM:	B	EA	1									50	5
PCOZZ	4730-289-2615	HOSE, 3/8 IN. ID, AS REQUIRED		FT		*	*	*	*	*	*			50	
MOOZZ		HOSE: STARTER, INLET, 3/8 IN. ID 7784-5-206 (26571) MANUFACTURE FROM:	B	EA	1									50	6
PCOZZ	4720-289-2615	HOSE, 3/8 IN. ID, AS REQUIRED		FT		*	*	*	*	*	*			50	
XDOZZ		FITTING, HOSE: SWIVEL 320-6-6 (03925)	B	EA	2									50	7
XDOZZ		FITTING, HOSE: PUMP BY-PASS LINE 323-4 (03925)	B	EA	2									50	8
XDOZZ		CROSS, TUBE, FITTING: PUMP TO FILTER LINE AA200-6 (98660)	B	EA	1									50	9
XDOZZ		ADAPTER, STRAIGHT PIPE TO TUBE: FILTER A1000-6-6 (98660)	B	EA	1									50	10
XDOZZ		TEE, PIPE: FILTER A3000-6-6-6 (98660)	B	EA	1									50	11
XDOZZ		BUSHING, PIPE: STARTER CONTROL VALVE PF101-12-6 (98660)	B	EA	2									50	12
XDOZZ		ELBOW, PIPE: 90 DEG, STARTER CONTROL VALVE A2000-6-6 (98660)	B	EA	2									50	13
XDOZZ		ADAPTER, STRAIGHT: MOTOR OUTLET 2021-8-12S (01276)	B	EA	2									50	14
XDOZZ		ELBOW, PIPE TO TUBE: STARTER INLET A2000C6-8 (98660)	B	EA	2									50	15
XDOZZ		COUPLING, TUBE: TANK RETURN LINE A1000-8-8 (98660)	B	EA	1									50	16
XDOZZ		TEE, PIPE: RELIEF VALVE TO TANK PF3011-8 (98660)	B	EA	1									50	17
XDOZZ		NIPPLE, LONG: TANK INLET, 3 IN. PF10L8-3INLG (98660)	B	EA	1									50	18
XDOZZ		UNION, GROUND JOINT: TANK TO TEE 3477 (63686)	B	EA	1									50	19
XDOZZ		REDUCER, PIPE: RELIEF VALVE INLET PF10-8-6 (98660)	B	EA	1									50	20
XDOZZ		CONNECTOR, HOSE: STARTER OUTLET 474-12B (01276)	B	EA	2									50	21

(1) SMR CODE	(2) FEDERAL STOCK NUMBER	(3) DESCRIPTION REF NUMBER & MFR CODE	USABLE ON CODE	(4) UNIT OF MEAS	(5) QTY INC IN UNIT	(6) 30-DAY DS MAINT ALLOWANCE (a) 1-20	(b) 21-50	(c) 51-100	(7) 30-DAY GS MAINT ALLOWANCE (a) 1-20	(b) 21-50	(c) 51-100	(8) 1-YR ALW PER 100 EQUIP CNTGY	(9) DEPOT MAINT ALW PER 100 EQUIP	(10) ILLUSTRATION (a) FIG. NO.	(b) ITEM NO.
XDOZZ		TEE, TUBE: FILTER RELIEF VALVE, 3/8 IN. 3200-6 (98660)	B	EA	1									50	22
XDOZZ		ADAPTER, TUBE: ACCUMULATOR VALVE A1000-6-6 (98660)		EA	1									50	23
XDOZZ		NIPPLE, LONG: ACCUMULATOR INLET PF10L6-3INLG (98660)	B	EA	1									50	24
XDOZZ		TEE, PIPE: ACCUMULATOR INLET PF31-6 (98660)	B	EA	1									50	25
XDOZZ		NIPPLE, LONG: ACCUMULATOR PRESSURE VALVE PF10L6-3 (98660)	B	EA	1									50	26
XDOZZ		ELBOW: 90 DEG, GAGE CONNECTION PF21-6-4 (98660)	B	EA	1									50	27
XDOZZ		ELBOW: 45 DEG, PRESSURE HOSE FROM HAND PUMP A4500C6-6 (98660)	B	EA	1									50	28
XDOZZ		ELBOW: 90 DEG, HAND PUMP INLET A2000-6-6 (98660)	B	EA	1									50	29
XDOZZ		TEE, PIPE: ACCUMULATOR VALVE PF3010-6 (98660)	B	EA	1									50	30
XDOZZ		ELBOW: 90 DEG, HAND PUMP INLET A2100C6-6 (98660)	B	EA	1									50	31
XDOZZ		NIPPLE, LONG: HAND PUMP INLET PF10L6-3INLG (98660)	B	EA	1									50	32
XDOZZ		ELBOW: 90 DEG, HAND PUMP INLET PF201-6 (98660)	B	EA	1									50	33
XDOZZ		FITTING, SWIVEL HOSE: HAND PUMP HOSE 320-6-6 (03925)	B	EA	1									50	34
XDOZZ		ELBOW: 90 DEG, PUMP INLET 1025-4-6 (03925)	B	EA	1									50	35
XDOZZ		FITTING, SWIVEL HOSE: HAND PUMP 320-6-6 (03925)	B	EA	2									50	36
XDOZZ		ELBOW: 90 DEG, HAND PUMP 2200-6 (98660)	B	EA	1									50	37
XDOZZ		TEE, PIPE: TANK LINE OUTLET 3200-6 (98660)	B	EA	1									50	38
XDOZZ		ELBOW: 90 DEG, REDUCER, TANK OUTLET PF201-8-6 (98660)	B	EA	1									50	39
XDOZZ		ADAPTER, TUBE TO MISSLE IMPACT PREDICTORS: TANK OUTLET A1000-6-6 (98660)	B	EA	1									50	40
XDOZZ		ELBOW: 90 DEG, BY-PASS LINE TO TANK PF201-4 (98660)	B	EA	1									50	41
XDOZZ		ELBOW: 90 DEG, BY-PASS LINE TO TANK A2100-4-4 (98660)	B	EA	1									50	42
XDOZZ		TEE, PIPE: BY-PASS LINE TO TANK PF3010-4 (98660)	B	EA	1									50	43
XDOZZ		ADAPTER: PIPE TO TUBE, BY-PASS LINE TO TANK A1100-4-4 (98660)	B	EA	1									50	44
XDOZZ		ELBOW: 90 DEG, BREATHER LINE A2200-4 (98660)	B	EA	4									50	45
PAOZZ	4820-241-4427	VALVE, RELIEF: RETURN VALVE 1503-3-4000 (82271)	B	EA	1	•	•	•	•	•	•	•	•	50	46

	(1) SMR CODE	(2) FEDERAL STOCK NUMBER	(3) DESCRIPTION REF NUMBER & MFR CODE	USABLE ON CODE	(4) UNIT OF MEAS	(5) QTY INC IN UNIT	(6) 30-DAY DS MAINT ALLOWANCE (a) 1-20	(b) 21-50	(c) 51-100	(7) 30-DAY GS MAINT ALLOWANCE (a) 1-20	(b) 21-50	(c) 51-100	(8) 1-YR ALW PER 100 EQUIP CNTGY	(9) DEPOT MAINT ALW PER 100 EQUIP	(10) ILLUSTRATION (a) FIG. NO.	(b) ITEM NO.
	PAOZZ	4820-462-7807	VALVE, DIRECTIONAL CONTROL VCA300378 (99066)	B	EA	2	*	*	*	*	*	*	*	*	50	17
N	MOOZZ		TUBE: 1/2 IN. OD 201-4510950-12 (80064) MANUFACTURE FROM:	C	EA	2									51	1
N	PAOZZ	4710-978-7010	TUBE, SEAMLESS, 3 FT, 6 IN. REQUIRED FOR EACH TUBE QQT830SEAMLESS (81348)		FT		*	*	*	*	*	*			51	
N	XDOZZ		ELBOW, SWIVEL: 1/2 IN. C5506X8 (79470)	C	EA	2									51	2
N	XDOZZ		CONNECTOR, MALE: 1/2 IN. C5205X8X8 (79470)	C	EA	5									51	3
N	XDOZZ		ELBOW, UNION: 1/2 IN. C5505X8 (79470)	C	EA	5									51	4
N	MOOZZ		TUBE: 1/2 IN. OD 201-4510950-2 (80064) MANUFACTURE FROM:	C	EA	1									51	5
N	PAOZZ	4710-978-7010	TUBE, SEAMLESS, 30 IN. REQUIRED QQT830SEAMLESS (81348)		FT		*	*	*	*	*	*			51	
N	MOOZZ		HOSE ASSEMBLY 16910D608608-72 (79470) MANUFACTURE FROM:	C	EA	2									51	6
N	PCOZZ	4720-930-4515	HOSE, 1/2 IN. ID, AS REQUIRED MILH13351TYPE2CLASSA (81349)		FT		*	*	*	*	*	*			51	
N	PAOZZ		FITTING, SWIVEL, 2 EA REQUIRED D608 (79470)		EA		*	*	*	*	*	*			51	
N	XDOZZ		ELBOW MALE: 90 DEG C5405X8 (79470)	C	EA	2									51	7
N	MOOZZ		TUBE: 1/2 IN. OD 201-4510950-7 (80064) MANUFACTURE FROM:	C	EA	1									51	8
N	PAOZZ	4710-978-7010	TUBE, SEAMLESS, 2 FT, 11 IN. REQUIRED QQT830SEAMLESS (81348)		FT		*	*	*	*	*	*			51	
N	XDOZZ		TEE, UNION: 1/2 IN. C5705X8 (79470)	C	EA	4									51	9
N	MOOZZ		TUBE: 1/2 IN. STEEL 201-4510950-24 (80064) MANUFACTURE FROM:	C	EA	1									51	10
N	PAOZZ	4710-978-7010	TUBE, SEAMLESS, 8 IN. REQUIRED QQT830SEAMLESS (81348)		FT		*	*	*	*	*	*			51	
N	XDOZZ		ELBOW, MALE: 90 DEG, 1/2 IN. C5405X8X8 (79470)	C	EA	3									51	11
	PAOZZ		VALVE, SHUTOFF 1900FFG (98847)	C	EA	2	*	*	*	*	*	*	*	*	51	12
N	MOOFF		TUBE: 1/2 IN. OD 201-4510950-3 (80064) MANUFACTURE FROM:	C	EA	1									51	13
N	PAOZZ	4710-978-7010	TUBE, SEAMLESS, 3 1/2 IN. REQUIRED QQT830SEAMLESS (81348)		FT		*	*	*	*	*	*			51	
N	MOOFF		HOSE ASSEMBLY 02508A608608-75 (79470) MANUFACTURE FROM:	C	EA	2									51	14
N	PCOZZ	4720-930-4515	HOSE, 1/2 IN. ID, AS REQUIRED MILH13351TYPE2CLASSA (81349)		FT		*	*	*	*	*	*			51	
N	PAOZZ	4730-319-5878	FITTING, SWIVEL, FEMALE, 4 EA REQUIRED 02508A608 (79470)		EA		*	*	*	*	*	*			51	

	(1) SMR CODE	(2) FEDERAL STOCK NUMBER	(3) DESCRIPTION REF NUMBER & MFR CODE	USABLE ON CODE	(4) UNIT OF MEAS	(5) QTY INC IN UNIT	(6) 30-DAY DS MAINT ALLOWANCE (a) 1-20	(b) 21-50	(c) 51-100	(7) 30-DAY GS MAINT ALLOWANCE (a) 1-20	(b) 21-50	(c) 51-100	(8) 1-YR ALW PER 100 EQUIP CNTGY	(9) DEPOT MAINT ALW PER 100 EQUIP	(10) ILLUSTRATION (a) FIG. NO.	(b) ITEM NO.
N	XDOZZ		CROSS: 1/2 IN. C5955X8 (79470)	C	EA	1									51	15
N	MOOZZ		TUBE: 1/2 IN. OD 201-4510950-8 (80064) MANUFACTURE FROM:	C	EA	1									51	16
N	PAOZZ	4710-978-7010	TUBE, SEAMLESS, 5 FT, 4 IN. REQUIRED QQT830SEAMLESS (81349)		FT		*	*	*	*	*	*			51	
N	MOOZZ		HOSE ASSEMBLY 02508A108668-44 (79470) MANUFACTURE FROM:	C	EA	1									51	17
N	PCOZZ	4720-930-4515	HOSE, 1/2 IN. ID, AS REQUIRED MILH13351TYPE2CLASSA (81349)		FT		*	*	*	*	*	*			51	
N	PAOZZ	4730-374-6960	FITTING, RIGID, 1 EA REQUIRED 02508A108 (79470)		EA		*	*	*	*	*	*			51	
N	PAOZZ	4730-913-7406	FITTING, SWIVEL, 1 EA REQUIRED 02508A668 (79470)		EA		*	*	*	*	*	*			51	
N	XDOZZ		TEE 2093-8-8S (01276)	C	EA	1									51	18
N	XDOZZ		NIPPLE, LONG: 1/2-14 THD SIZE, 3 1/2 IN. LG 1-2INIPSX3AND1-2INLG (63686)	C	EA	6									51	19
N	XDOZZ		BUSHING: ACCUMULATOR PRESSURE GAGE C3109X8X4 (79470)	C	EA	2									51	20
N	XDOZZ		ELBOW: 90 DEG, 1/2 IN. C3509X8 (79470)	C	EA	2									51	21
N	XDOZZ		TEE: 1/2 IN. C3709X8 (79470)	C	EA	2									51	22
N	MOOFF		HOSE ASSEMBLY 02508A608608-30 (79470) MANUFACTURE FROM:	C	EA	2									51	23
N	PCOZZ	4720-930-4515	HOSE, 1/2 IN. ID, AS REQUIRED MILH13351TYPE2CLASSA (81349)		FT		*	*	*	*	*	*			51	
N	PAOZZ	4730-952-0038	FITTING, SWIVEL, FEMALE, 2 EA REQUIRED 02508A608 (79470)		EA		*	*	*	*	*	*			51	
N	XDOZZ		TEE: 1/2 IN. C5605X8X8X6 (79470)	C	EA	2									51	24
	XDOZZ		BUSHING, REDUCING C3109X12X8 (79470)	C	EA	3									51	25
N	MOOZZ		HOSE ASSEMBLY 02508A608608-36 (79470) MANUFACTURE FROM:	C	EA	2									51	26
N	PCOZZ	4720-930-4515	HOSE, 1/2 IN. ID, AS REQUIRED MILH13351TYPE2CLASSA (81349)		FT		*	*	*	*	*	*			51	
N	PAOZZ		FITTING, SWIVEL, FEMALE, 2 EA REQUIRED 02508A860 (79470)		EA		*	*	*	*	*	*			51	
N	XDOZZ		ELBOW, MALE: 90 DEG, 1/2 IN. C5405X8X12 (79470)	C	EA	2									51	27
N	MOOZZ		TUBE: 1/2 IN. OD 201-4510950-9 (80064) MANUFACTURE FROM:	C	EA	1									51	28
N	PAOZZ	4710-978-7010	TUBE, SEAMLESS, 2 FT, 9 IN. REQUIRED QQT830SEAMLESS (81348)		FT		*	*	*	*	*	*			51	
N	XDOZZ		TEE, MALE RUN: 1/2 IN. C5755X8X8X8 (79470)	C	EA	2									51	29

	(1) SMR CODE	(2) FEDERAL STOCK NUMBER	(3) DESCRIPTION REF NUMBER & MFR CODE	USABLE ON CODE	(4) UNIT OF MEAS	(5) QTY INC IN UNIT	(6) 30-DAY DS MAINT ALLOWANCE (a) 1-20	(b) 21-50	(c) 51-100	(7) 30-DAY GS MAINT ALLOWANCE (a) 1-20	(b) 21-50	(c) 51-100	(8) 1-YR ALW PER 100 EQUIP CNTGY	(9) DEPOT MAINT ALW PER 100 EQUIP	(10) ILLUSTRATION (a) FIG. NO.	(b) ITEM NO.
N	MOOZZ		TUBE: 1/2 IN. OD 201-4510950-5 (80064) MANUFACTURE FROM:	C	EA	1									51	30
N	PAOZZ	4710-978-7010	TUBE, SEAMLESS, 6 FT REQUIRED QQT830SEAMLESS (81348)		FT		*	*	*	*	*	*			51	
N	MOOZZ		TUBE: 1/2 IN. OD 201-4510950-6 (80064) MANUFACTURE FROM:	C	EA	1									51	31
N	PAOZZ	4710-978-7010	TUBE, SEAMLESS, 2 FT, 3 IN. REQUIRED QQT830SEAMLESS (81348)		FT		*	*	*	*	*	*			51	
	PCOZZ	4720-879-0776	HOSE ASSEMBLY: FEMALE SWIVEL, BOTH ENDS S10416M616-616-28 (79470)		EA	2	*	*	*	*	*	*	*	*	51	32
	XDFZZ		ELBOW: 90 DEG, 1 X 3/4 IN. C5405X16X12 (79470)	C	EA	2									51	33
	XDFZZ		ADAPTER, STRAIGHT THREADS CB269X12X12 (79470)	C	EA	2									51	34
	XDOZZ		CONNECTOR: MALE 712262 (18877)	C	EA	2									51	35
	XDFZZ		REDUCER: SCREWED 57191X3-4IN (63686)	C	EA	2									51	36
	MFFZZ		PIPE: 3/4 IN. 201-4510950-99 (80064) MANUFACTURE FROM:	C	EA	1									51	37
	PAFZZ	4710-810-4505	PIPE, 3/4 IN., SCHEDULE 40, AS REQUIRED MILT20157TYPEE (81349)		EA		*	*	*	*	*	*			51	
	XDFZZ		ELBOW: 90 DEG, SCREWED 57403-4IN (63686)	C	EA	4									51	38
	MFFZZ		PIPE: 3/4 IN. 201-4510950-100 (80064) MANUFACTURE FROM:	C	EA	2									51	39
	PAFZZ	4710-810-4505	PIPE, 3/4 IN., SCHEDULE 40, AS REQUIRED MILT20157TYPEE (81349)		FT		*	*	*	*	*	*			51	
	MFFZZ		PIPE: 3/4 IN. 201-4510950-101 (80064) MANUFACTURE FROM:	C	EA	2									51	40
	PAFZZ	4710-810-4505	PIPE, 3/4 IN., SCHEDULE 40, AS REQUIRED MILT20157TYPEE (81349)		FT		*	*	*	*	*	*			51	
	XDFZZ		UNION, SCREWED 250H (14959)	C	EA	2									51	41
	MFFZZ		PIPE: 3/4 IN. 201-4510950-98 (80064) MANUFACTURE FROM:	C	EA	2									51	42
	PAFZZ	4710-810-4505	PIPE, 3/4 IN., SCHEDULE 40, AS REQUIRED MILT20157TYPEE (81349)		FT		*	*	*	*	*	*			51	
	XDOZZ		NIPPLE, LONG TUBE 3-4NIPSX2INLG (63686)	C	EA	3									51	43
N	XDOZZ		TEE: 3/4 IN. 5706 (79470)	C	EA	1									51	44
	XDOZZ		BUSHING, REDUCING C3109X12X8 (79470)	C	EA	3									51	45
N	XDOZZ		NIPPLE, LONG: 1/2 IN. 1-2NIPSX2INLG (63686)	C	EA	1									51	46

	(1) SMR CODE	(2) FEDERAL STOCK NUMBER	(3) DESCRIPTION REF NUMBER & MFR CODE	USABLE ON CODE	(4) UNIT OF MEAS	(5) QTY INC IN UNIT	(6) 30-DAY DS MAINT ALLOWANCE (a) 1-20	(b) 21-50	(c) 51-100	(7) 30-DAY GS MAINT ALLOWANCE (a) 1-20	(b) 21-50	(c) 51-100	(8) 1-YR ALW PER 100 EQUIP CNTGY	(9) DEPOT MAINT ALW PER 100 EQUIP	(10) ILLUSTRATION (a) FIG. NO.	(b) ITEM NO.
	XDOZZ		NIPPLE, LONG, TUBE 3-4NIPSX4NLG (63686)	C	EA	1									51	47
N	MOOZZ		HOSE ASSEMBLY 16910D608608-75 (79470) MANUFACTURE FROM:	C	EA	2									51	48
N	PCOZZ	4720-930-4515	HOSE, 1/2 IN. ID, AS REQUIRED MILH13351TYPE2CLASSA (81349)		FT		*	*	*	*	*	*			51	
N	PAOZZ		FITTING, SWIVEL, 2 EA REQUIRED D608 (79470)		EA		*	*	*	*	*	*			51	
	XDOZZ		CONNECTOR, MALE: HOSE TO PUMP C5205X8 (79470)	C	EA	2									51	49
N	MOOZZ		TUBE: 1/2 IN. OD 201-4510950-10 (80064) MANUFACTURE FROM:	C	EA	1									51	50
N	PAOZZ	4710-978-7010	TUBE, SEAMLESS, 2 FT, 4 1/2 IN. REQUIRED QQT830 (81348)		FT		*	*	*	*	*	*			51	
N	MOOZZ		TUBE: 1/2 IN. OD 201-4510950-1 (80064) MANUFACTURE FROM:	C	EA	1									51	51
N	PAOZZ	4710-978-7010	TUBE, SEAMLESS, 6 IN. REQUIRED QQT830SEAMLESS (81348)		FT		*	*	*	*	*	*			51	
	PAOZZ	4820-845-0274	VALVE, GLOBE, SHUTOFF: 1/2 IN. 1 (14959)	C	EA	1	*	*	*	*	*	*	*	*	51	52
N	XDOZZ		ELBOW, MALE PIPE SF1094-8-8 (03925)	C	EA	1									51	53
N	MOOZZ		TUBE: 1/2 IN. OD 201-4510950-11 (80064) MANUFACTURE FROM:	C	EA	1									51	54
N	PAOZZ	4710-978-7010	TUBE, SEAMLESS, 3 1/2 IN. REQUIRED QQT830SEAMLESS (81348)		FT		*	*	*	*	*	*			51	
N	MOOZZ		HOSE ASSEMBLY 16910D608608-44 (79470) MANUFACTURE FROM:	C	EA	1									51	55
N	PCOZZ	4720-930-4515	HOSE, 1/2 IN. ID, AS REQUIRED MILH13351TYPE2CLASSA (81349)		FT		*	*	*	*	*	*			51	
N	PAOZZ		FITTING, SWIVEL, 2 EA REQUIRED D608 (79470)		EA		*	*	*	*	*	*			51	
	MOOZZ		HOSE ASSEMBLY 16910D608608-44 (79470) MANUFACTURE FROM:	C	EA	1									51	56
	PCOZZ	4720-930-4515	HOSE, 1/2 IN. ID, AS REQUIRED MILH13351TYPE2CLASSA (81349)		FT		*	*	*	*	*	*			51	
	PAOZZ		FITTING, SWIVEL, 2 EA REQUIRED D608 (79470)		EA		*	*	*	*	*	*			51	
N	XDOZZ		ELBOW, MALE: 90 DEG, 1/2 IN. C5405X8X8 (79470)	C	EA	2									51	57
N	MOOZZ		TUBE: 1/2 IN. OD 201-4510950-4 (80064) MANUFACTURE FROM:	C	EA	1									51	58
N	PAOZZ	4710-978-7010	TUBE, SEAMLESS, 4 FT, 6 IN. REQUIRED QQT830SEAMLESS (81348)		FT		*	*	*	*	*	*			51	
	XDOZZ		TEE, FEMALE TO MALE 2029-12-12S (01276)	A	EA	1										
	PCOZZ	4720-289-2615	HOSE, RUBBER: 3/8 IN. ID 1509-6 (00624)	A	FT		*	*	*	*	*	*	*	*		

(1) SMR CODE	(2) FEDERAL STOCK NUMBER	(3) DESCRIPTION REF NUMBER & MFR CODE	USABLE ON CODE	(4) UNIT OF MEAS	(5) QTY INC IN UNIT	(6) 30-DAY DS MAINT ALLOWANCE (a) 1-20	(b) 21-30	(c) 31-100	(7) 30-DAY GS MAINT ALLOWANCE (a) 1-20	(b) 21-30	(c) 31-100	(8) 1-YR ALW PER 100 EQUIP CNTGY	(9) DEPOT MAINT ALW PER 100 EQUIP	(10) ILLUSTRATION (a) FIG. NO.	(b) ITEM NO.
PCOZZ	4720-067-0454	HOSE, RUBBER: 13/32 IN. ID 1503-8 (01276)	A	FT		*	*	*	*	*	*	*	*		
PCOZZ	4720-541-8859	HOSE, RUBBER: 3/4 IN. ID 2556-12 (00624)	A	FT	19	*	*	*	*	*	*	*	*		
PCOZZ	4720-420-7723	HOSE, RUBBER: 5/16 IN. ID 1503-6 (01276)	A	FT	3	*	*	*	*	*	*	*	*		
XDFZZ		RESERVOIR: HYDRAULIC STARTING MMC60PC14 (96480)	A	EA	1										
XDFZZ		CAP, VENT, RESERVOIR: STARTING 155 (41592)	A	EA	1										
N XDOZZ		NUT: 1/2 IN. C5115X8 (79470)	C	EA	29										
N XDOZZ		NUT: 3/4 IN. AN818-12 (88044)	C	EA	10										
N XDOZZ		SLEEVE C5165X12 (79470)	C	EA	10										
N XDOZZ		ELBOW, UNION: 3/4 IN. C5505X12 (79470)	C	EA	6										
N XDOZZ		ADAPTER: 1/2 X 3/8 IN. C3209X8X6 (79470)	C	EA	2										
N XDOZZ		REDUCER: 1/2 X 1/4 IN. C5015X8X4 (79470)	C	EA	1										
N XDOZZ		NUT: 1/2 IN. C5105X8 (79470)	C	EA	1										
N XDOZZ		NIPPLE, HEXAGON: 1/2 IN. C3069X8 (79470)	C	EA	1										
N XDOZZ		ELBOW: 90 DEG, 3/4 IN. 57013-4IN (63686)	C	EA	1										
N PAOZZ	5306-637-8557	BOLT, MACHINE: SQUARE HEAD, 3/8-16 THD SIZE, 1 1/2 IN. LG MS35355-66 (96906)	C	EA	4	*	*	*	*	*	*	*	*		
N PAOZZ	5310-761-0654	NUT, HEXAGON: 3/8-16 THD SIZE MS51967-9 (96906)	C	EA	4	*	*	*	*	*	*	*	*		
N PAOZZ	5310-209-1962	WASHER, FLAT: 3/8 IN. SCREW SIZE 6:-0542-1 (42280)	C	EA	4	*	*	*	*	*	*	*	*		
N PAOZZ	5306-018-6742	BOLT, MACHINE 186742 (24617)	C	EA	12	*	*	*	*	*	*	*	*		
N PAOZZ	5310-934-9764	NUT, PLAIN, HEXAGON: 10-24 THD SIZE MS35649-205 (96906)	C	EA	12	*	*	*	*	*	*	*	*		
N PAOZZ	5310-809-8544	WASHER, FLAT MS27183-7 (96906)	C	EA	12	*	*	*	*	*	*	*	*		
N PAOZZ	5340-451-8861	CLAMP, TUBE MS21104 (96906)	C	EA	16	*	*	*	*	*	*	*	*		
N XDFZZ		RESERVOIR ASSEMBLY TK202-972 (01843)	C	EA	1										
N XBFZZ		BRACKET: SIDE MTG BK200429 (01843)	C	EA	2										
N XAFZZ		RESERVOIR HYDRAULIC, FLUID TANK TK200593 (01843)	C	EA	1										
N XDFZZ		BREATHER, HYDRAULIC TANK BV200567 (01843)	C	EA	1										
N XDFZZ		SCREEN STRAINER SN200568 (01842)	C	EA	1										
N PAOZZ	4730-352-9414	PLUG: 1/2 IN, NPTF PC7628 (01843)	C	EA	1	*	*	*	*	*	*	*	*		

(1) SMR CODE	(2) FEDERAL STOCK NUMBER	(3) DESCRIPTION REF NUMBER & MFR CODE	USABLE ON CODE	(4) UNIT OF MEAS	(5) QTY INC IN UNIT	(6) 30-DAY DS MAINT ALLOWANCE (a) 1-20	(b) 21-50	(c) 51-100	(7) 30-DAY GS MAINT ALLOWANCE (a) 1-20	(b) 21-50	(c) 51-100	(8) 1-YR ALW PER 100 EQUIP CNTGY	(9) DEPOT MAINT ALW PER 100 EQUIP	(10) ILLUSTRATION (a) FIG. NO.	(b) ITEM NO.
XDOZZ		CONNECTOR: MALE 7974112 (00000)	C	EA	2										
XDOZZ		ELBOW: 90 DEG C5405X8 (79470)	C	EA	1										
PAFZZ	5305-724-5910	SCREW, CAP, SOCKET HEAD MS90725-162 (96906)	C	EA	6	•	•	•	•	•	•	•	•		
XDOZZ		ELBOW: 90 DEG, 1/2 IN. 13205E4389-4 (97403)	C	EA	2										
		GROUP 36 - STARTING ENGINE, HYDRAULIC													
PAOZZ		SCREW, CAP, HEXAGON HEAD: STARTER MTG, 5/8-11 THD SIZE, 1 3/8 IN. LG 271557 (72582)		EA	3	•	•	•	•	•	•	•	•	52	1
PAOZZ	5310-820-6653	WASHER, LOCK: STARTER MTG, 5/8 IN. SCREW SIZE MS35338-50 (96906)		EA	3	•	•	•	•	•	•	•	•	52	2
PAOFF	2990-115-0137	STARTER, ENGINE: HYDRAULIC RB ENGINE CND2A221 (01843) (INCLUDES SAME COMPONENTS AS STARTER, FSN 2990-844-2379, EXCEPT WHERE ANNOTATED)		EA	1	•	•	•	•	•	•	•	•	52	
PAOFF	2990-844-2379	STARTER, ENGINE: HYDRAULIC FOR LB ENGINE CND2A111 (01843)		EA	1	•	•	•	•	•	•	•	•	52	
PAOFF	2920-115-0134	MOTOR ASSEMBLY: HYDRAULIC COUNTERCLOCKWISE HH202656-2 (01843) (USED ON STARTER, FSN 2990-115-0137, ONLY)		EA	1	•	•	•	•	•	•	•	•	52	3
PAOFF	2920-115-0133	MOTOR ASSEMBLY: HYDRAULIC HH202656-1 (01843) (USED ON STARTER, FSN 2990-844-2379, ONLY)		EA	1	•	•	•	•	•	•	•	•	52	3
PAFZZ	5306-815-2955	BOLT, MACHINE: PINION GEAR HOUSING SC100196 (01843)		EA	8	•	•	•	•	•	•	•	•	52	4
PAFZZ	5310-012-0214	WASHER, LOCK: BENDIX, DRIVE HOUSING MS35338-26 (96906)		EA	12	•	•	•	•	•	•	•	•	52	5
XBFZZ		HOUSING, PINION: GEAR HG202721 (01843)		EA	2									52	6
PAFZZ	3110-293-8320	BEARING, NEEDLE: PINION HOUSING MS17131-25 (96906)		EA	2	•	•	•	•	•	•	•	•	52	7
C PAFZZ	2920-633-5477	BENDIX, DRIVE ASSEMBLY DV202720-2 (01843) (USED ON STARTER, FSN 2990-115-0137, ONLY)		EA	1	•	•	•	•	•	•	•	•	52	8
C PAFZZ	2920-646-6275	BENDIX, DRIVE ASSEMBLY DV202720-1 (01843) (USED ON STARTER, FSN 2990-844-2379, ONLY)		EA	1	•	•	•	•	•	•	•	•	52	8
C PAFZZ	4730-244-9664	FITTING, ADAPTER: PORT INLET, OUTLET F1200674 (01843)		EA	4	•	•	•	•	•	•	•	•	52	9
C PCFZZ	5330-052-1653	PACKING, PREFORMED: ADAPTER GA100067 (01843)		EA	4	•	•	•	•	•	•	•	•	52	10
PAFZZ	5305-004-1589	SCREW, CAP, HEXAGON HEAD: PORT PLATE SC100251 (01843)		EA	16	•	•	•	•	•	•	•	•	52	11
PAFZZ	5310-407-9566	WASHER, LOCK: PORT PLATE SCREWS MS35338-26 (96906)		EA		•	•	•	•	•	•	•	•	52	12

(1) Smr CODE	(2) FEDERAL STOCK NUMBER	(3) DESCRIPTION — REF NUMBER & MFR CODE	USABLE ON CODE	(4) UNIT OF MEAS	(5) QTY INC IN UNIT	(6) 30-DAY DS MAINT ALLOWANCE (a) 1-30	(b) 31-90	(c) 91-180	(7) 30-DAY GS MAINT ALLOWANCE (a) 1-30	(b) 31-90	(c) 91-180	(8) 1-YR ALW PER 100 EQUIP CNTGY	(9) DEPOT MAINT ALW PER 100 EQUIP	(10) ILLUSTRATION (a) FIG. NO.	(b) ITEM NO.
XDFZZ		PORT PLATE PL202664 (01843)		EA	2									52	13
PAFZZ	3110-227-3237	BEARING, ROLLER: SHAFT PLATE END M951961-3 (96906)		EA	2	•	•	•	•	•	•	•	•	52	14
PAFZZ	2990-832-0167	BARREL, SHAFT: SPRING BC202662 (01843)		EA	2	•	•	•	•	•	•	•	•	52	15
PAFZZ	2990-646-6796	PISTON, CRANKING: MOTOR PT202661 (01843)		EA	14	•	•	•	•	•	•	•	•	52	16
PAFZZ	5365-235-2536	RING, RETAINING: SPRING BARREL RG1103 (01843)		EA	2	•	•	•	•	•	•	•	•	52	17
C PAFZZ	5310-235-2585	WASHER, SPRING: BARREL SEAT WA1949 (06481)		EA	4	•	•	•	•	•	•	•	•	52	18
PAFZZ	2990-646-6439	SPRING, BARREL SP202663 (01843)		EA	2	•	•	•	•	•	•	•	•	52	19
PAFZZ	5365-236-2528	RING, RETAINING: SEAL HOLDER RG1104 (01843)		EA	2	•	•	•	•	•	•	•	•	52	20
PAFZZ	2520-241-4429	SHAFT, DRIVE: HYDRAULIC MOTOR SH202724 (01843)		EA	2	•	•	•	•	•	•	•	•	52	21
PCFZZ	2990-897-2626	PACKING, PREFORMED: O RING, OUTER GA100064 (01843)		EA	2	•	•	•	•	•	•	•	•	52	22
PAFZZ	2990-897-2649	HOLDER, SEALING: O RINGS HP200624 (01843)		EA	2	•	•	•	•	•	•	•	•	52	23
PCFZZ	2990-897-2625	PACKING, PREFORMED: O RING, INNER GA100061 (01843)		EA	2	•	•	•	•	•	•	•	•	52	24
C PAFZZ	5365-897-2662	RING, RETAINING: BEARING RG100036 (01843)		EA	2	•	•	•	•	•	•	•	•	52	25
R PAFZZ	3120-477-4247	BEARING, BALL: SHAFT BB100060 (01843)		EA	2	•	•	•	•	•	•	•	•	52	26
C XDFZZ		HOUSING, THRUST: BEARING HG202675 (01843)		EA	2									52	27
C XDFZZ		PIN, DOWEL: BEARING HOUSING PN1252 (01843)		EA	2									52	28
PAFZZ	3110-601-0816	BEARING, BALL: SPECIAL BALL THRUST BB202674 (01843)		EA	2	•	•	•	•	•	•	•	•	52	29
PAFZZ	3110-236-3695	PLATE, THRUST: BEARING PL202673 (01843)		EA	2	•	•	•	•	•	•	•	•	52	30
PAFZZ	5305-004-7239	SCREW, NAMEPLATE: FASTENING SC150-3CA (01843)		EA	4	•	•	•	•	•	•	•	•	52	31
XDFZZ		PLATE, NAME: IDENTIFICATION NP200549 (01843)		EA	2									52	32
XAFZZ		HOUSING, MOTOR HG202718 (01843)		EA	2									52	33
PAFZZ	3110-236-3695	BEARING AND PLATE BB202850 (01843)		EA	2	•	•	•	•	•	•	•	•	52	
		GROUP 37 - SOLENOID VALVE, STARTING MOTOR													
PAOFF	4810-757-7197	VALVE, SOLENOID: CRANK MOTOR 31446-24 (82271)	A	EA	2	•	•	•	•	•	•	•	•	53	
XDFZZ		SCREW, CAP, SOCKET HEAD: CAP MTG, 5/16-18 SCREW SIZE, 1 1/4 IN. LG	A	EA	4									53	1
XDFZZ		CAP, VALVE 112332 (82271)	A	EA	1									53	2

(1) SMR CODE	(2) FEDERAL STOCK NUMBER	(3) DESCRIPTION REF NUMBER & MFR CODE	USABLE ON CODE	(4) UNIT OF MEAS	(5) QTY INC IN UNIT	(6) 30-DAY DS MAINT ALLOWANCE (a) 1-20	(b) 21-50	(c) 51-100	(7) 30-DAY GS MAINT ALLOWANCE (a) 1-20	(b) 21-50	(c) 51-100	(8) 1-YR ALW PER 100 EQUIP CNTGY	(9) DEPOT MAINT ALW PER 100 EQUIP	(10) ILLUSTRATION (a) FIG. NO.	(b) ITEM NO.
PCFZZ	4810-086-2584	PACKING, PREFORMED: O RING, CAP SEAL A218 (82271)	A	EA	3	*	*	*	*	*	*	*	*	53	3
PAFZZ	4810-694-9776	VALVE AND SEAT: SUB ASSEMBLY 31413 (82271)	A	EA	1	*	*	*	*	*	*	*	*	53	4
XAFZZ		SEAT, VALVE 31410 (82271)	A	EA	1									53	5
XAFZZ		VALVE 47421 (82271)	A	EA	1									53	6
PAFZZ	5340-200-4889	SPRING, VALVE RELEASE 31411 (82271)	A	EA	1	*	*	*	*	*	*	*	*	53	7
XDFZZ		GUIDE: SPRING VALVE PRESSURE 31403 (82271)	A	EA	1									53	8
PAFZZ	3110-100-6149	BEARING, BALL: 3/16 IN. DIA, STEEL, GRADE 1 3-16GR1STL (82271)	A	EA	1	*	*	*	*	*	*	*	*	53	9
PAFZZ	5340-200-4888	SPRING: BEARING BALL RETAINER 31409 (82271)	A	EA	1	*	*	*	*	*	*	*	*	53	10
XDFZZ		GUIDE, SPRING: BALL VALVE 31012 (82271)	A	EA	1									53	11
PAFZZ	3110-100-6161	BEARING, BALL: 3/32 IN. DIA, STEEL, GRADE 1 3-32GR1STL (82271)	A	EA	1	*	*	*	*	*	*	*	*	53	12
XDFZZ		SEAT, PILOT VALVE 31405 (82271)	A	EA	1									53	13
XDFZZ		ROD, SOLENOID VALVE 31404 (82271)	A	EA	1									53	14
XDFZZ		STOP, SOLENOID VALVE 112224 (82271)	A	EA	1									53	15
PCFZZ	5330-016-8455	PACKING, PREFORMED: SOLENOID STOP A112 (82271)	A	EA	1	*	*	*	*	*	*	*	*	53	16
PCFZZ	4820-069-9105	PACKING, PREFORMED: SOLENOID STOP A014 (82271)	A	EA	1	*	*	*	*	*	*	*	*	53	17
XAFZZ		ROD: VALVE 112225 (82271)	A	EA	1									53	18
XDFZZ		RING, RETAINING: END CAP 5000-188H (82271)	A	EA	1									53	19
XDFZZ		CAP, VALVE: COIL END 112138 (82271)	A	EA	1									53	20
PCFZZ	4820-085-1961	PACKING, PREFORMED: END CAP A029 (82271)	A	EA	1	*	*	*	*	*	*	*	*	53	21
PCFZZ	4820-069-9106	PACKING, PREFORMED: PLUNGER SEAL A115 (82271)	A	EA	1	*	*	*	*	*	*	*	*	53	22
XDFZZ		RING, RETAINING: TYPE E X5133-21H (82271)	A	EA	1									53	23
XDFZZ		BUTTON, COIL: PLUNGER ROD 111423-1 (82271)	A	EA	1									53	24
XDFZZ		SPRING, BUTTON: PLUNGER 111437 (82271)	A	EA	1									53	25
XDFZZ		PIN, BUTTON: PLUNGER 111422-1 (82271)	A	EA	1									53	26
PCFZZ	4820-069-9107	PACKING, PREFORMED: PLUNGER PIN A010 (82271)	A	EA	1	*	*	*	*	*	*	*	*	53	27
XDFZZ		WASHER: COIL RETAINER 112139 (82271)	A	EA	1									53	28

(1) SMR CODE	(2) FEDERAL STOCK NUMBER	(3) DESCRIPTION REF NUMBER & MFR CODE	USABLE ON CODE	(4) UNIT OF MEAS	(5) QTY INC IN UNIT	(6) 30-DAY DS MAINT ALLOWANCE (a) 1-20	(b) 21-50	(c) 51-100	(7) 30-DAY GS MAINT ALLOWANCE (a) 1-20	(b) 21-50	(c) 51-100	(8) 1-YR ALW PER 100 EQUIP CNTGY	(9) DEPOT MAINT ALW PER 100 EQUIP	(10) ILLUSTRATION (a) FIG. NO.	(b) ITEM NO.
PAFZZ		SCREW, MACHINE: CONNECTOR MTG, 4-40 NC X 3/8 IN.	A	EA	4	*	*	*	*	*	*	*	*	53	29
PAFZZ		WASHER, LOCK: CONNECTOR MTG, NO. 4 SCREW SIZE	A	EA	4	*	*	*	*	*	*	*	*	53	30
PAFZZ	5935-827-9045	CONNECTOR, SOLENOID VALVE MS3102R10SL4P (96906)	A	EA	1	*	*	*	*	*	*	*	*	53	31
PCFZZ	4820-069-9103	PACKING, PREFORMED: ELECTRIC CONNECTION A016 (82271)	A	EA	1	*	*	*	*	*	*	*	*	53	32
XDFZZ		PLUG, PIPE: 1/4-18 IN. NPT	A	EA	1									53	33
PAFZZ		SCREW, DRIVE: PLATE MTG, NO. 2 X 1/8 IN., TYPE U	A	EA	2	*	*	*	*	*	*	*	*	53	34
XBFZZ		PLATE: NAME IDENTIFICATION 19062 (82271)	A	EA	1									53	35
PAFZZ	5950-088-2651	COIL, ELECTRIC: VALVE ACTUATE 31118-1-24 (82271)	A	EA	1	*	*	*	*	*	*	*	*	53	36
XAFZZ		TUBE, PLUNGER 31612 (82271)	A	EA	1									53	37
XAFZZ		PLUNGER, SOLENOID 31111 (82271)	A	EA	1									53	38
PAFZZ	5310-757-7172	WASHER, SPRING: COIL SEAT 112148 (82271)	A	EA	1	*	*	*	*	*	*	*	*	53	39
PAFZZ		SCREW, CAP, SOCKET HEAD: PLATE MTG, 8-32 THD SIZE, 5/8 IN. LG	A	EA	6	*	*	*	*	*	*	*	*	53	40
XAFZZ		PLATE, VALVE BODY 112141 (82271)	A	EA	1									53	41
PCFZZ	4810-086-2583	PACKING, PREFORMED: RING SHELL A030 (82271)	A	EA	1	*	*	*	*	*	*	*	*	53	42
XAFZZ		SHELL: COIL HOUSING 112140 (82271)	A	EA	1									53	43
XAFZZ		BLOCK, SOLENOID: VALVE BODY 112333 (82271)	A	EA	1									53	44
N PAOFF	4820-833-3073	VALVE CONTROL, HYDRAULIC STARTER VCA300403-1 (01843)	C	EA	2	*	*	*	*	*	*	*	*	54	1
N XDOZZ		TUBE TU202909 (01843)	C	EA	1									54	2
N XDOZZ		FITTING, CONNECTOR FI1340 (01843)	C	EA	1									54	3
N XDOZZ		FITTING, ELBOW FI1338 (01843)	C	EA	1									54	4
N PAOZZ		VALVE, PLUG, SHUTOFF VA202908 (01843)	C	EA	1	*	*	*	*	*	*	*	*	54	5
N XDOZZ		FITTING, HEXAGON, NIPPLE FI1339 (01843)	C	EA	1									54	6
N XDOZZ		FITTING, STREET, ELBOW FI1341 (01843)	C	EA	1									54	7
N PAOZZ		SCREW, CAP, HEXAGON HEAD: VALVE SOLENOID MTG SC1627 (01843)	C	EA	4	*	*	*	*	*	*	*	*	54	8
N PAOZZ	5310-499-6148	WASHER, LOCK: VALVE SOLENOID MTG WA5-8CA (01843)	C	EA	4	*	*	*	*	*	*	*	*	54	9
N XDFZZ		PLATE, RETAINER: VALVE SOLENOID PL202905 (01843)	C	EA	1									54	10
N PAOZZ	5945-450-5161	VALVE, SOLENOID VA202906 (01843)	C	EA	1	*	*	*	*	*	*	*	*	54	11

	(1) SMR CODE	(2) FEDERAL STOCK NUMBER	(3) DESCRIPTION REF NUMBER & MFR CODE	USABLE ON CODE	(4) UNIT OF MEAS	(5) QTY INC IN UNIT	(6) 30-DAY DS MAINT ALLOWANCE (a) 1-20	(b) 21-50	(c) 51-100	(7) 30-DAY GS MAINT ALLOWANCE (a) 1-20	(b) 21-50	(c) 51-100	(8) 1-YR ALW PER 100 EQUIP CNTGY	(9) DEPOT MAINT ALW PER 100 EQUIP	(10) ILLUSTRATION (a) FIG. NO.	(b) ITEM NO.
N	PCFZZ	5330-982-6572	GASKET: O RING GA1145 (01843)	C	EA	2	*	*	*	*	*	*	*	*	54	12
N	XDFZZ		HOUSING, ACTUATOR HG202775-1 (01843)	C	EA	1									54	13
	PCFZZ	5330-982-6572	GASKET: O RING GA1145 (01843)		EA	1	*	*	*	*	*	*	*	*	54	14
N	XDFZZ		BODY, VALVE VB202762 (01843)	C	EA	1									54	15
N	PAFZZ	5360-832-1709	SPRING, VALVE SP202763 (01843)	C	EA	1	*	*	*	*	*	*	*	*	54	16
N	PAFZZ	4820-833-3015	VALVE ASSEMBLY VA202836 (01843)	C	EA	1	*	*	*	*	*	*	*	*	54	17
N	XAFZZ		HOUSING, VALVE HG202904-1 (01843)	C	EA	1									54	18
			GROUP 38 - PUMP HYDRAULIC STARTER													
C	PAOZZ	5305-044-4153	SCREW, CAP, HEXAGON HEAD: PUMP MTG 100158 (72582)	AB	EA	8	*	*	*	*	*	*	*	*	55	1
C	PAOZZ	5310-584-5272	WASHER, LOCK: PUMP MTG MS35338-48 (96906)	AB	EA	8	*	*	*	*	*	*	*	*	55	2
C	PAOZZ		SCREW, CAP, HEXAGON HEAD: PUMP MTG 179857 (72582)	AB	EA	2	*	*	*	*	*	*	*	*	55	3
C	PAOZZ	5310-595-6852	WASHER, COVER: COPPER 5150568 (72582)	AB	EA	2	*	*	*	*	*	*	*	*	55	4
C	PCOZZ	5330-620-7359	GASKET: PUMP MTG 5117061 (72582)		EA	2	*	*	*	*	*	*	*	*	55	5
C	PAOZZ	5305-071-1767	SCREW, CAP, HEXAGON HEAD: PUMP DRIVE, PLATE MTG, 1/2-13 THD SIZE, 1 1/8 IN. LG MS90725-110 (96906)	AB	EA	8	*	*	*	*	*	*	*	*	55	6
C	PAOZZ	5310-584-5272	WASHER, LOCK: PUMP DRIVE, PLATE MTG, 1/2 IN. SCREW SIZE MS35338-48 (96906)	AB	EA	8	*	*	*	*	*	*	*	*	55	7
C	XDOZZ		PLATE, PUMP DRIVE 6525073 (72582)	AB	EA	2									55	8
C	PAOFT	2990-629-9713	PUMP, HYDRAULIC: STARTER 5125466 (72582)	AB	EA	2	*	*	*	*	*	*	*	*	55	
C	PAOZZ	5310-732-0959	NUT, PLAIN, HEXAGON: SHAFT MS51968-8 (96906)	AB	EA	2	*	*	*	*	*	*	*	*	55	9
C	PAOZZ	5310-637-9541	WASHER, LOCK: SHAFT 110730 (72582)	AB	EA	2	*	*	*	*	*	*	*	*	55	10
C	XDOZZ		DRIVE, PUMP 6525066 (72582)	AB	EA	2									55	11
C	PAOZZ	5306-021-2544	SCREW, CAP, HEXAGON HEAD: PLATE TO BODY 181333 (72582)	AB	EA	6	*	*	*	*	*	*	*	*	55	12
C	PAOZZ	5310-582-5965	WASHER, LOCK: PLATE TO BODY MS35338-44 (96906)	AB	EA	6	*	*	*	*	*	*	*	*	55	13
C	XDOZZ		PLATE, MOUNTING 5125178 (72582)	AB	EA	2									55	14
C	PCOZZ	2990-658-8231	GASKET: PUMP BODY 6525069 (72582)	AB	EA	2	*	*	*	*	*	*	*	*	55	15
C	PCFZZ	2815-711-6256	SEAL, PLAIN, ENCASED: SHAFT 6525056 (72582)	AB	EA	2	*	*	*	*	*	*	*	*	55	16

(1)	(2)	(3) DESCRIPTION		(4)	(5)	(6) 30-DAY DS MAINT ALLOWANCE			(7) 30-DAY GS MAINT ALLOWANCE			(8)	(9)	(10) ILLUSTRATION	
SMR CODE	FEDERAL STOCK NUMBER	REF NUMBER & MFR CODE	USABLE ON CODE	UNIT OF MEAS	QTY INC IN UNIT	(a) 1-20	(b) 21-50	(c) 51-100	(a) 1-20	(b) 21-50	(c) 51-100	1-YR ALW PER 100 EQUIP CNTGY	DEPOT MAINT ALW PER 100 EQUIP	(a) FIG. NO.	(b) ITEM NO.
C XDFZZ		RETAINER, BEARING 6526057 (72582)	AB	EA	2									55	17
C PCFZZ	2990-658-8231	GASKET; PUMP BODY 6525065 (72582)	AB	EA	2	*	*	*	*	*	*	*	*	55	18
C PAFZZ	3110-144-8756	BEARING, BALL 954498 (72582)	AB	EA	2	*	*	*	*	*	*	*	*	55	19
C PAFZZ	2990-771-0826	SHAFT, SHOULDERED 6525050 (72582)	AB	EA	2	*	*	*	*	*	*	*	*	55	20
C PAFZZ	2990-658-8223	RACE, BEARING 6525075 (72582)	AB	EA	2	*	*	*	*	*	*	*	*	55	21
C PAFZZ	3110-770-6097	BEARING, NEEDLE 457249 (72582)	AB	EA	2	*	*	*	*	*	*	*	*	55	22
C PAFZZ	2990-658-8224	WASHER, BEARING 6525076 (72582)	AB	EA	2	*	*	*	*	*	*	*	*	55	23
C PAFZZ	3110-554-3275	BEARING, BALL 903200 (72582)	AB	EA	2	*	*	*	*	*	*	*	*	55	24
C PAFZZ	2990-658-8227	SPRING, PUMP, PISTON 6525095 (72582)	AB	EA	2	*	*	*	*	*	*	*	*	55	25
C PAFZZ	4730-770-6109	PLUG, PIPE; PISTON 6525195 (72582)	AB	EA	4	*	*	*	*	*	*	*	*	55	26
C PAFZZ	2990-658-8226	PISTON, PUMP 6525054 (72582)	AB	EA	2	*	*	*	*	*	*	*	*	55	27
XDOZZ		ELBOW, RETURN; PUMP TO RESERVOIR 118753 (72582)	AB	EA	2									55	28
C XDOZZ		ELBOW, INLET; PUMP MS20822-6 (96906)	AB	EA	2									55	29
C XDOZZ		SPACER, PUMP 9411504 (72582)	AB	EA	2									55	30
C XDFZZ		RETAINER, CHECK VALVE 6525060 (72582)	AB	EA	2									55	31
C PAFZZ	2990-625-9912	BAFFLE, CHECK VALVE 6525071 (72582)	AB	EA	3	*	*	*	*	*	*	*	*	55	32
C PAFZZ	2990-625-9585	VALVE ASSEMBLY, CHECK 6505025 (72582)	AB	EA	2	*	*	*	*	*	*	*	*	55	33
C PAFZZ	2990-625-9912	BAFFLE, CHECK VALVE 6525071 (72582)	AB	EA	1	*	*	*	*	*	*	*	*	55	34
C XDOZZ		ELBOW, OUTLET; PUMP 118755 (72582)	AB	EA	2									55	35
C X2FZZ		RETAINER, CHECK VALVE 6525060 (72582)		EA	2									55	36
C PAFZZ	2990-625-9585	VALVE ASSEMBLY, CHECK 6505025 (72582)	AB	EA	2	*	*	*	*	*	*	*	*	55	37
C PAFZZ	2990-625-9912	BAFFLE, CHECK VALVE 6525071 (72582)	AB	EA	2	*	*	*	*	*	*	*	*	55	38
C PAFZZ	4730-770-6109	PLUG, PIPE; RELIEF VALVE PLUNGER 6525195 (72582)	AB	EA	4	*	*	*	*	*	*	*	*	55	39
C PAFZZ	2815-711-6257	SPRING, HELICAL, COMPRESSION; RELIEF VALVE 6525079 (72582)	AB	EA	2	*	*	*	*	*	*	*	*	55	40
C PAFZZ	2990-658-8230	PISTON, PRESSURE RELIEF 6525062 (72582)	AB	EA	2	*	*	*	*	*	*	*	*	55	41
C PCFZZ	5330-650-7230	PACKING, PREFORMED; RELIEF VALVE 6525102 (72582)	AB	EA	2	*	*	*	*	*	*	*	*	55	42
C PAFZZ	5330-650-7231	RING, REINFORCING 6525302 (72582)	AB	EA	2	*	*	*	*	*	*	*	*	55	43

(1) SMR CODE	(2) FEDERAL STOCK NUMBER	(3) DESCRIPTION REF NUMBER & MFR CODE	USABLE ON CODE	(4) UNIT OF MEAS	(5) QTY INC IN UNIT	(6) 30-DAY DS MAINT ALLOWANCE (a) 1-20	(b) 21-50	(c) 51-100	(7) 30-DAY GS MAINT ALLOWANCE (a) 1-20	(b) 21-50	(c) 51-100	(8) 1-YR ALW PER 100 EQUIP CNTGY	(9) DEPOT MAINT ALW PER 100 EQUIP	(10) ILLUSTRATION (a) FIG. NO.	(b) ITEM NO.
C XDFZZ		WASHER, RELIEF VALVE 6525078 (72582)	AB	EA	2									55	44
C PAFZZ	2990-658-8229	PLUG, MACHINE: RELIEF VALVE 6525061 (72582)	AB	EA	2	*	*	*	*	*	*	*	*	55	45
C PAFZZ	2815-711-6255	WASHER, FLAT, GASKET: RELIEF VALVE PLUG 6525072 (72582)	AB	EA	2	*	*	*	*	*	*	*	*	55	46
C PAFZZ	5340-672-6772	SPRING, HELICAL, COMPRESSION: RELIEF VALVE 6525063 (72582)	AB	EA	2	*	*	*	*	*	*	*	*	55	47
C XUFZZ		SEAT, RELIEF VALVE 6525070 (72582)	AB	EA	2									55	48
C XAFZZ		BODY ASSEMBLY, PUMP 6505014 (72582)	AB	EA	2									55	49
N PAOFF	4320-864-6236	PUMP RECHARGING RPA300412 (01843)	C	EA	2	*	*	*	*	*	*	*	*	56	
N PAOFF	4320-350-8725	PUMP ASSEMBLY, ENGINE RPA308090A (01843)	C	EA	1	*	*	*	*	*	*	*	*	56	
N PAFZZ	5310-431-8884	NUT, SHAFT NT6-16CA (01843)	C	EA	1	*	*	*	*	*	*	*	*	56	1
N PAFZZ	2320-796-1046	WASHER, SHAFT, NUT WA1-17CA (01843)	C	EA	1	*	*	*	*	*	*	*	*	56	2
N PAFZZ	5330-052-1893	SEAL OIL SHAFT SE100082 (01843)	C	EA	1	*	*	*	*	*	*	*	*	56	3
N XDCZZ		FLANGE MOUNTING ASSEMBLY FL202603 (01843) (INCLUDES ITEMS 3 AND 8 ON FIG 56)	C	EA	1									56	4
N PAFZZ	5306-018-7715	SCREW, CAP, HEXAGON HEAD: FLANGE TO HOUSING SC1618 (01843)		EA	2	*	*	*	*	*	*	*	*	56	5
N PAFZZ		WASHER, LOCK: FLANGE TO HOUSING SCREW WA5-10CA (01843)	C	EA	2	*	*	*	*	*	*	*	*	56	6
N PCFZZ	5330-970-4173	GASKET: O RING GA1129-5 (01843)		EA	1	*	*	*	*	*	*	*	*	56	7
N PAFZZ	3110-227-3237	BEARING, ROLLER MS51961-3 (96906)		EA	1	*	*	*	*	*	*	*	*	56	8
N XDFZZ		WASHER WA1933 (01843)	C	EA	1									56	9
N PAFZZ	5315-869-5113	KEY, WOODRUFF KY3-6 (01843)	C	EA	1	*	*	*	*	*	*	*	*	56	10
N PAFZZ	2605-938-9308	SHAFT, DRIVE SH202594 (01843)	C	EA	1	*	*	*	*	*	*	*	*	56	11
N PAFZZ	3110-227-3241	BEARING, NEEDLE BN100257 (01843)	C	EA	1	*	*	*	*	*	*	*	*	56	12
N XDFZZ		WASHER WA1933 (01843)	C	EA	1									56	13
N PAFZZ	4320-931-9548	PISTON PT202606 (01843)	C	EA	1	*	*	*	*	*	*	*	*	56	14
N XDFZZ		RING, RETAINING RG1098 (01843)	C	EA	2									56	15
N PAFZZ	5340-627-7618	PLUG, HEXAGON PG202614 (01843)	C	EA	1	*	*	*	*	*	*	*	*	56	16
N PAFZZ	5330-970-4139	GASKET: O RING, PLUG GA1129-1 (01843)	C	EA	1	*	*	*	*	*	*	*	*	56	17

	(1) SMR CODE	(2) FEDERAL STOCK NUMBER	(3) DESCRIPTION REF NUMBER & MFR CODE	USABLE ON CODE	(4) UNIT OF MEAS	(5) QTY INC IN UNIT	(6) 30-DAY DS MAINT ALLOWANCE (a) 1-20	(b) 21-50	(c) 51-100	(7) 30-DAY GS MAINT ALLOWANCE (a) 1-20	(b) 21-50	(c) 51-100	(8) 1-YR ALW PER 100 EQUIP CNTGY	(9) DEPOT MAINT ALW PER 100 EQUIP	(10) ILLUSTRATION (a) FIG. NO.	(b) ITEM NO.
N	PAFZZ	4320-932-1015	SPRING, VALVE SP202607 (01843)	C	EA	1	*	*	*	*	*	*	*	*	56	18
N	XDFZZ		BALL, STEEL MS19059-51 (96906)	C	EA	1									56	19
N	PAFZZ	5340-827-7618	PLUG, HEXAGON PG202614 (01843)	C	EA	1	*	*	*	*	*	*	*	*	56	20
N	PAFZZ	5330-970-4139	GASKET: O RING, PLUG GA1129-1 (01843)	C	EA	1	*	*	*	*	*	*	*	*	56	21
N	XDFZZ		PLUNGER, VALVE PC202613 (01843)	C	EA	1									56	22
N	PAFZZ	2990-897-2665	RING, BACKUP RG100157 (01843)	C	EA	1	*	*	*	*	*	*	*	*	56	23
N	PCFZZ	5330-970-4175	GASKET: O RING GA1129-7 (01843)	C	EA	1	*	*	*	*	*	*	*	*	56	24
	PAFZZ	2990-897-2665	RING, BACKUP RG100157 (01843)		EA	1	*	*	*	*	*	*	*	*	56	25
N	PAFZZ	5340-827-7615	PLUG, HEXAGON PG202608 (01843)	C	EA	1	*	*	*	*	*	*	*	*	56	26
N	PCFZZ	5330-052-1853	GASKET: O RING GA1129-2 (01843)	C	EA	1	*	*	*	*	*	*	*	*	56	27
N	PAFZZ	4320-932-1017	SPRING, VALVE SP202702 (01843)	C	EA	1	*	*	*	*	*	*	*	*	56	28
	XDFZZ		BALL, STEEL MS19059-51 (96906)		EA	1									56	29
N	PAFZZ	2805-938-9311	CAP, UNLOADING VALVE CP202609 (01843)	C	EA	1	*	*	*	*	*	*	*	*	56	30
N	XDFZZ		SCREW, SPRING ADJUSTING SC202610 (01843)	C	EA	1									56	31
N	PAFZZ	5340-932-1872	SPRING, UNLOADING VALVE SP292611 (01843)	C	EA	1	*	*	*	*	*	*	*	*	56	32
N	XDFZZ		SEAT, VALVE VS202612 (01843)	C	EA	1									56	33
	XDFZZ		BALL, STEEL MS19059-51 (96906)		EA	1									56	34
N	XDFZZ		FITTING, ADAPTER FI202617 (01843)	C	EA	1									56	35
N	PCFZZ	5330-052-6897	GASKET: O RING, ADAPTER GA1129-4 (01843)	C	EA	1	*	*	*	*	*	*	*	*	56	36
N	PAFZZ	4820-934-9547	VALVE, INLET VA202616 (01843)	C	EA	1	*	*	*	*	*	*	*	*	56	37
N	PAFZZ	4320-932-1016	SPRING, INLET VALVE SP202615 (01843)	C	EA	1	*	*	*	*	*	*	*	*	56	38
N	XAFZZ		HOUSING ASSEMBLY HG202597 (01843)	C	EA	1									56	39
N	PAFZZ	4820-833-3035	SEAT, VALVE VS202602 (01843)	C	EA	2	*	*	*	*	*	*	*	*	56	40
N	XDFZZ		SLEEVE SV202601 (01843)	C	EA	1									56	41
N	PAFZZ	3110-897-2556	BEARING, NEEDLE BN100256 (01843)	C	EA	1	*	*	*	*	*	*	*	*	56	42
	PAFZZ	4820-833-3035	SEAT, VALVE VS202602 (01843)		EA	2	*	*	*	*	*	*	*	*	56	43
N	XDFZZ		PLUG, PIPE PG100137 (01843)	C	EA	1									56	44

	(1) SMR CODE	(2) FEDERAL STOCK NUMBER	(3) DESCRIPTION REF NUMBER & MFR CODE	USABLE ON CODE	(4) UNIT OF MEAS	(5) QTY INC IN UNIT	(6) 30-DAY DS MAINT ALLOWANCE (a) 1-20	(b) 21-50	(c) 51-100	(7) 30-DAY GS MAINT ALLOWANCE (a) 1-20	(b) 21-50	(c) 51-100	(8) 1-YR ALW PER 100 EQUIP CNTGY	(9) DEPOT MAINT ALW PER 100 EQUIP	(10) ILLUSTRATION (a) FIG. NO.	(b) ITEM NO.
N	XDFZZ		SCREW SET SC2096 (01843)	C	EA	1									56	45
N	PAOZZ	5310-004-5138	NUT, PLAIN, HEXAGON: FLANGE MTG NT5-10CA (01843)	C	EA	4	*	*	*	*	*	*	*	*	56	46
N	PAOZZ	5305-004-1590	SCREW, CAP, HEXAGON HEAD: FLANGE MOUNTING SC2046 (01843)	C	EA	4	*	*	*	*	*	*	*	*	56	47
N	PAOZZ	5310-782-4412	WASHER, LOCK: FLANGE MTG WA6-10CA (01843)	C	EA	8	*	*	*	*	*	*	*	*	56	48
N	XDFZZ		DRIVE, INTERMEDIATE DV202966 (01843)	C	EA	1									56	49
N	PCOZZ	5330-401-0864	GASKET: FLANGE GA202082 (01843)	C	EA	1	*	*	*	*	*	*	*	*	56	50
N	XDOZZ		FLANGE FL202694 (01843)	C	EA	1									56	51
N	XDOZZ		FLANGE ASSEMBLY FL202693 (01843)	C	EA	1									56	52
N	PAOZZ	5330-250-5705	SEAL OIL SE1047 (01843)	C	EA	1	*	*	*	*	*	*	*	*	56	53
			GROUP 39 - ACCUMULATOR, HYDRAULIC STARTING													
	PAFHH	2530-241-4430	ACCUMULATOR, HYDRAULIC: STARTER ACB30A7109 (01843)		EA	2	*	*	*	*	*	*	*	*	57	
C	PAFZZ	5305-135-5136	SCREW, CAP, HEXAGON HEAD: PLATE RETAINER SC2023 (01843)		EA	2	*	*	*	*	*	*	*	*	57	1
C	PAFZZ	5310-136-1515	WASHER, LOCK: PLATE, SCREW WA6-16 (01843)		EA	2	*	*	*	*	*	*	*	*	57	2
C	XDFZZ		PLATE, RETAINING: END CAPS PL202625 (01843)		EA	2									57	3
	PAFZZ	2990-078-2617	RING, SEGMENT RETAINER RG202624-2 (01843)		EA	8	*	*	*	*	*	*	*	*	57	4
	PAFZZ	2990-078-2618	RING, SEGMENT RETAINER RG202624-1 (01843)		EA	8	*	*	*	*	*	*	*	*	57	5
	PAFZZ	5305-135-5136	SCREW, CAP, HEXAGON HEAD: PLATE RETAINER SC2023 (01843)		EA	2	*	*	*	*	*	*	*	*	57	6
	PAFZZ	5310-136-1515	WASHER, LOCK: PLATE, SCREW WA6-16 (01843)		EA	2	*	*	*	*	*	*	*	*	57	7
C	XDFZZ		PLATE, RETAINING: END CAPS PL202625 (01843)		EA	2									57	8
	XDFZZ		CAP, END, AIR CP202630 (01843)		EA	2									57	9
	KFFZZ		RETAINER, TEFLON: CAP, AIR SEAL RG100155 (01843) (PART OF KIT, FSN 2990-824-0454)		EA	8									57	10
C	PAFZZ	5340-740-1274	PLUG, FUSIBLE: 4700 PSI, BURST FU202572-3 (01843)		EA	2	*	*	*	*	*	*	*	*	57	11
	KFFZZ		PACKING, PREFORMED: O RING, FUSE ASSEMBLY GA100117 (01843) (PART OF KIT, FSN 2990-824-0454)		EA	2									57	12
C	PAFZZ	4820-960-3847	CAP, VALVE ASSEMBLY CP100053 (01843)		EA	2	*	*	*	*	*	*	*	*	57	13

(1) SMR CODE	(2) FEDERAL STOCK NUMBER	(3) DESCRIPTION REF NUMBER & MFR CODE / USABLE ON CODE	(4) UNIT OF MEAS	(5) QTY INC IN UNIT	(6) 30-DAY DS MAINT ALLOWANCE (a) 1-20	(b) 21-50	(c) 51-100	(7) 30-DAY GS MAINT ALLOWANCE (a) 1-20	(b) 21-50	(c) 51-100	(8) 1-YR ALW PER 100 EQUIP CNTGY	(9) DEPOT MAINT ALW PER 100 EQUIP	(10) ILLUSTRATION (a) FIG. NO.	(b) ITEM NO.
PAFZZ	4820-960-3842	VALVE ASSEMBLY, AIR VA200932 (01843)	EA	2	*	*	*	*	*	*	*	*	57	14
PCFZZ	5330-893-9463	PACKING, PREFORMED: O RING, VALVE ASSEMBLY GA100475 (01843)	EA	2	*	*	*	*	*	*	*	*	57	15
C XDFZZ		CAP, END: OIL ACCUMULATOR HOUSING CP202623-1 (01843)	EA	2									57	16
KFFZZ		PACKING, PREFORMED: O RING, CAP SEAL GA1128-9 (01843) (PART OF KIT, FSN 2990-824-0454)	EA	8									57	17
XAHZZ		PISTON, ACCUMULATOR PT202627 (01843)	EA	2									57	18
XBHZZ		PLATE, IDENTIFICATION: ACCUMULATOR NP202634 (01843)	EA	2									57	19
XAHZZ		HOUSING, ACCUMULATOR CYLINDER HG202620-6 (01843)	EA	1									57	20
XDFZZ		BRACKET: ACCUMULATOR MTG BK200740 (01843)	EA	2									57	
PAFZZ	5305-225-8504	SCREW, CAP, HEXAGON HEAD: BRACKET, 5/16-18 THD SIZE, 2 IN. LG MS90725-40 (96906)	EA	4	*	*	*	*	*	*	*	*	57	
XDFZZ		SUPPORT BK200741 (01843)	EA	1									57	
XCFZZ		CLAMP BK200742 (01843)	EA	2									57	
PCFZZ	2990-824-0454	KIT, REPAIR, SEAL: HYDRAULIC ACCUMULATOR KT202777 (01843)	EA	1	*	*	*	*	*	*	*	*	57	
		4-RETAINER											57	10
		1-PACKING											57	12
		4-PACKING											57	17
		GROUP 40 - PUMP, HAND, HYDRAULIC STARTING												
PAOFF	4320-684-7192	PUMP, HAND: HYDRAULIC STARTING HPA300118 (01843)	EA	1	*	*	*	*	*	*	*	*	58	
R PAFZZ	5365-264-7693	RING, RETAINING CLEVIS PIN RG100465 (01843)	EA	2	*	*	*	*	*	*	*	*	58	1
XDFZZ		PIN, CLEVIS PN202028 (01843)	EA	1									58	2
C XBFZZ		LEVER, HAND PUMP LE202029 (01843)	EA	1									58	3
C XBFZZ		HANDLE, OPERATING LEVER HA200610 (01843)	EA	1									58	4
XDFZZ		GRIP, HANDLE, RUBBER: HYDRAULIC PUMP GP100212 (01843)	EA	1									58	5
C XDFZZ		SCREW, BLEEDER VALVE SC200968 (01843)	EA	1									58	6
C KFFZZ		PACKING, PREFORMED: BLEED SCREW GA100113 (01843) (PART OF REPAIR KIT, FSN 4320-839-6239)	EA	1									58	7
XDFZZ		BEARING, BALL, VALVE MS19059-51 (96906)	EA	1									58	8

	(1) SMR CODE	(2) FEDERAL STOCK NUMBER	(3) DESCRIPTION REF NUMBER & MFR CODE	USABLE ON CODE	(4) UNIT OF MEAS	(5) QTY INC IN UNIT	(6) 30-DAY DS MAINT ALLOWANCE (a) 1-20	(b) 21-50	(c) 51-100	(7) 30-DAY GS MAINT ALLOWANCE (a) 1-20	(b) 21-50	(c) 51-100	(8) 1-YR ALW PER 100 EQUIP CNTGY	(9) DEPOT MAINT ALW PER 100 EQUIP	(10) ILLUSTRATION (a) FIG. NO.	(b) ITEM NO.
	XDFZZ		FITTING, OIL, INLET F1200600 (01843)		EA	1									58	9
C	KFFZZ		PACKING, PPREFORMED: OIL, INLET PLUG GA100213 (01843) (PART OF REPAIR KIT, FSN 4320-839-6239)		EA	1									58	10
	KFFZZ		RETAINER, PACKING: INLET FITTING RG100214 (01843) (PART OF KIT, FSN 4320-839-6239)		EA	1									58	11
	KFFZZ		PACKING, PREFORMED: INLET FITTING GA100215 (01843) (PART OF KIT, FSN 4320-839-6239)		EA	1									58	12
	XDFZZ		BEARING, BALL, VALVE CHECK BB100211 (01843)		EA	1									58	13
	PAFZZ	2990-897-2679	SPRING, CHECK VALVE, INLET SP200605 (01843)		EA	1	*	*	*	*	*	*	*	*	58	14
	XDFZZ		PLUG, OIL PASSAGE PG764 (01843)		EA	1									58	15
	XDFZZ		LINK ASSEMBLY: CONNECT HANDLE LK100464 (01843)		EA	1									58	16
R	PAFZZ	5365-897-2661	RING, RETAINING: PLUNGER GLAND RG100102 (01843)		EA	1	*	*	*	*	*	*	*	*	58	17
	XDFZZ		GLAND, PLUNGER HEAD AND PUMP BG200603 (01843)		EA	1									58	18
	KFFZZ		RETAINER: O RING, PLUNGER GLAND RG100208 (01843) (PART OF KIT, FSN 4320-839-6239)		EA	1									58	19
	KFFZZ		PACKING, PREFORMED: PLUNGER GLAND GA100097 (01843) (PART OF KIT, FSN 4320-839-6239)		EA	1									58	20
	KFFZZ		RETAINER: O RING, PLUNGER GLAND RG100207 (01843) (PART OF KIT, FSN 4320-839-6239)		EA	1									58	21
	KFFZZ		PACKING, PREFORMED: PLUNGER GA100111 (01843) (PART OF KIT, FSN 4320-839-6239)		EA	1									58	22
	XDFZZ		PLUNGER, PUMP: HYDRAULIC PC200602 (01843)		EA	1									58	23
	PAFZZ	4320-897-2656	SEAT, CHECK VALVE, DISCHARGE PG200604 (01843)		EA	1	*	*	*	*	*	*	*	*	58	24
	KFFZZ		PACKING, PREFORMED: CHECK VALVE GA100108 (01843) (PART OF KIT, FSN 4320-839-6239)		EA	1									58	25
	KFFZZ		RETAINER: O RING, PLUNGER RG100209 (01843) (PART OF KIT, FSN 4320-839-6239)		EA	1									58	26
	KFFZZ		PACKING, PREFORMED: PLUNGER GA100110 (01843) (PART OF KIT, FSN 4320-839-6239)		EA	1									58	27
R	XDFZZ		BEARING, BALL: CHECK VALVE, DISC BB100211 (01843)		EA	1									58	28
R	XDFZZ		SPRING, CHECK VALVE, DISCHARGE SP200605 (01843)		EA	1									58	29
	XAFZZ		HOUSING, PUMP, HAND HG200598 (01843)		EA	1									58	30

(1) SMR CODE	(2) FEDERAL STOCK NUMBER	(3) DESCRIPTION REF NUMBER & MFR CODE	USABLE ON CODE	(4) UNIT OF MEAS	(5) QTY INC IN UNIT	(6) 30-DAY DS MAINT ALLOWANCE (a) 1-20	(b) 21-50	(c) 51-100	(7) 30-DAY GS MAINT ALLOWANCE (a) 1-20	(b) 21-50	(c) 51-100	(8) 1-YR ALW PER 100 EQUIP CNTGY	(9) DEPOT MAINT ALW PER 100 EQUIP	(10) ILLUSTRATION (a) FIG. NO.	(b) ITEM NO.
PCFZZ	4320-839-6239	REPAIR KIT, HYDRAULIC HAND PUMP: STARTING KT202565 (01843)		EA	1	*	*	*	*	*	*	*	*	58	
		1-PACKING												58	7
		1-PACKING												58	10
		1-PACKING												58	11
		1-RETAINER												58	12
		1-PACKING												58	19
		1-RETAINER												58	20
		1-PACKING												58	21
		1-RETAINER												58	22
		1-PACKING												58	25
		1-PACKING												58	26
		1-RETAINER												58	27
		1-PACKING													
PAOZZ	5305-225-8506	BOLT, HEXAGON HEAD: HAND PUMP MTG MS90725-42 (96906)	C	EA	4	*	*	*	*	*	*	*	*		
PAOZZ	5310-880-7744	NUT, HEXAGON: HAND PUMP MTG MS51967-5 (96906)	C	EA	4	*	*	*	*	*	*	*	*		
		GROUP 41 - FILTER, OIL, HYDRAULIC STARTING													
C PAOZZ	2815-906-1591	FILTER, HIGH PRESSURE: STARTING FRH300116 (01843)	AB	EA	2	*	*	*	*	*	*	*	*	59	
C XAOZZ		CAP, FILTER: OUTLET CP200576 (01843)	AB	EA	2									59	1
C PCOZZ	2940-897-2641	PACKING, PREFORMED: OUTLET CAP GASKET GA100201 (01843)	AB	EA	2	*	*	*	*	*	*	*	*	59	2
C PAOZZ	2940-810-5686	FILTER, SCREEN ELEMENT FE200575 (01843)	AB	EA	2	*	*	*	*	*	*	*	*	59	3
C XDOZZ		SEAT, SPRING, FILTER ELEMENT GU200574 (01843)	AB	EA	2									59	4
C XDOZZ		SPRING, HELICAL, FILTER SEAT SP202109 (01843)	AB	EA	2									59	5
C XAOZZ		BODY, FILTER: HYDRAULIC, OIL HG200570 (01843)	AB	EA	2									59	6
D PAOZZ	2990-005-7652	FILTER, T, HYDRAULIC FLUID FRK300382-3A (01843)	C	EA	1	*	*	*	*	*	*	*	*	60	
D XAOZZ		CAP END FILTER CP202799 (01843)	C	EA	1									60	1
D PCOZZ	2940-897-2641	SEAL FILTER ELEMENT GA100201 (01843)	C	EA	1	*	*	*	*	*	*	*	*	60	2
D PAOZZ	2940-810-5686	ELEMENT FILTER: 30 MICRONS FE200575 (01843)	C	EA	1	*	*	*	*	*	*	*	*	60	3
D XAOZZ		BODY, FILTER HG202803-3A (01843)	C	EA	1									60	4

(1)	(2)	(3) DESCRIPTION	(4)	(5)	(6) 30-DAY DS MAINT ALLOWANCE			(7) 30-DAY GS MAINT ALLOWANCE			(8)	(9)	(10) ILLUSTRATION	
SMR CODE	FEDERAL STOCK NUMBER	REF NUMBER & MFR CODE / USABLE ON CODE	UNIT OF MEAS	QTY INC IN UNIT	(a) 1-20	(b) 21-50	(c) 51-100	(a) 1-20	(b) 21-50	(c) 51-100	1-YR ALW PER 100 EQUIP CNTGY	DEPOT MAINT ALW PER 100 EQUIP	(a) FIG. NO.	(b) ITEM NO.
		GROUP 42 - TRANSFER GEAR ASSEMBLY												
C PAFZZ	5305-004-3172	SCREW, DRIVE: IDENTIFICATION PLATE MTG, NO. 4, 1/4 IN. LG 192413 (72582)	EA	8	*	*	*	*	*	*	*	*	61	1
C XBFZZ		PLATE, IDENTIFICATION: TRANSFER GEAR 5192466 (72582)	EA	2									61	2
PAFHH	2815-592-0379	TRANSFER GEAR ASSEMBLY 5118295 (72582)	EA	2	*	*	*	*	*	*	*	*	61	
PAFZZ		SCREW, CAP, HEXAGON HEAD: HOUSING MTG, 3/8-16 THD SIZE, 4 1/2 IN. LG 186288 (72582)	EA	8	*	*	*	*	*	*	*	*	61	3
PAFZZ	5310-080-6004	WASHER, FLAT: COVER MTG, 3/8 IN. SCREW SIZE MS27183-14 (96906)	EA	8	*	*	*	*	*	*	*	*	61	4
PAFZZ	5305-018-6289	SCREW, CAP, HEXAGON HEAD: HOUSING MTG, 3/8-16 THD SIZE, 5 IN. LG 186289 (72582)	EA	8	*	*	*	*	*	*	*	*	61	5
PAFZZ	5310-080-6004	WASHER, FLAT: HOUSING MTG, 3/8 IN. SCREW SIZE MS27183-14 (96906)	EA	8	*	*	*	*	*	*	*	*	61	6
PAFZZ	5305-068-0511	SCREW, CAP, HEXAGON HEAD: HOUSING MTG, 3/8-16 THD SIZE, 1 1/4 IN. LG MS90728-62 (96906)	EA	32	*	*	*	*	*	*	*	*	61	7
PAFZZ	5310-637-9541	WASHER, LOCK: HOUSING MTG, 3/8 IN. SCREW SIZE MS35338-46 (96906)	EA	32	*	*	*	*	*	*	*	*	61	8
PCFZZ	2815-588-5112	GASKET: GEAR HOUSING 5158364 (72582)	EA	2	*	*	*	*	*	*	*	*	61	9
XDFZZ		PIN, STRAIGHT, HEADLESS 5157524 (72582)	EA	4									61	10
PAFZZ		WIRE, LOCKING: COVER SCREW 5172370 (72582)	EA	12	*	*	*	*	*	*	*	*	61	11
PAFZZ		SCREW, CAP, HEXAGON HEAD: COVER MTG, 3/8-16 THD SIZE, 1 1/2 IN. LG 445594 (72582)	EA	24	*	*	*	*	*	*	*	*	61	12
PAFZZ	5310-637-9541	WASHER, LOCK: COVER MTG, 3/8 IN. SCREW SIZE MS35338-46 (96906)	EA	24	*	*	*	*	*	*	*	*	61	13
XDFZZ		COVER ASSEMBLY: TRANSFER GEAR DRIVE SET 5186360 (72582)	EA	4									61	14
C PCFZZ	2815-395-0925	GASKET: DRIVE GEAR COVER 5175776 (72582)	EA	4	*	*	*	*	*	*	*	*	61	15
PAHZZ	3110-144-8567	BEARING, BALL: DRIVE GEAR 903214 (72582)	EA	4				*	*	*	*	*	61	16
PAHZZ	2010-111-6424	GEAR, DRIVE 5115700 (72582)	EA	4				*	*	*	*	*	61	17
PAHZZ	3110-144-8567	BEARING, BALL: DRIVE GEAR 903214 (72582)	EA	4				*	*	*	*	*	61	18
C PAHZZ	3110-554-3468	BEARING, BALL: TRANSFER GEAR 3309 (43334)	EA	2				*	*	*	*	*	61	19
R PAHZZ	5310-691-9686	NUT, PLAIN, HEXAGON: OUTPUT SHAFT 5171964 (72582)	EA	2				*	*	*	*	*	61	20
R PAHZZ	5310-691-9687	WASHER, FLAT: OUTPUT SHAFT NUT 5171965 (72582)	EA	2				*	*	*	*	*	61	21

(1) SMR CODE	(2) FEDERAL STOCK NUMBER	(3) DESCRIPTION REF NUMBER & MFR CODE	USABLE ON CODE	(4) UNIT OF MEAS	(5) QTY INC IN UNIT	(6) 30-DAY DS MAINT ALLOWANCE (a) 1-20	(b) 21-50	(c) 51-100	(7) 30-DAY GS MAINT ALLOWANCE (a) 1-20	(b) 21-50	(c) 51-100	(8) 1-YR ALW PER 100 EQUIP CNTGY	(9) DEPOT MAINT ALW PER 100 EQUIP	(10) ILLUSTRATION (a) FIG. NO.	(b) ITEM NO.
PANZZ	2815-591-2653	GEAR, DRIVE, TRANSFER 5171953 (72582)		EA	2				*	*	*	*	*	61	22
PANZZ	5340-590-1737	SPACER: TRANSFER GEAR, OUTPUT 5172054 (72582)		EA	2				*	*	*	*	*	61	23
C PAFZZ	5310-274-8341	NUT, SELF-LOCKING: FLANGE MTG, 3/4-16 THD SIZE 6147605 (72582)		EA	24	*	*	*	*	*	*	*	*	61	24
PAFZZ	5305-591-9235	SCREW, CAP, HEXAGON HEAD: FLANGE MTG, 3/4-16 THD SIZE, 5 IN. LG 138414 (72582)		EA	24	*	*	*	*	*	*	*	*	61	25
C PAFZZ	5310-584-7888	WASHER, LOCK: FLANGE MTG, 3/4 IN. SCREW SIZE 103326 (72582)		EA	24	*	*	*	*	*	*	*	*	61	26
C XDFZZ		FLANGE, DRIVE SHAFT: PROPELLER 5173268 (72582)		EA	2									61	27
C PAFZZ	5315-013-7228	PIN, COTTER: FLANGE RETAINING NUT, 5/32 IN DIA, 1 1/2 IN. LG MS24665-423 (96906)		EA	4	*	*	*	*	*	*	*	*	61	28
C PAFZZ	5310-588-8484	NUT, SELF-LOCKING: FLANGE RETAINING STUD 5172387 (72582)		EA	2	*	*	*	*	*	*	*	*	61	29
R XDFZZ		COUPLING, MARINE, GEAR: FLANGE 5168911 (72582)		EA	2									61	30
C PAFZZ	5306-623-1600	BOLT, MACHINE: RETAINER PLATE MTG, 7/16-14 THD SIZE, 1 5/8 IN. LG 186626 (72582)		EA	16	*	*	*	*	*	*	*	*	61	31
C PAFZZ	5310-209-0965	WASHER, LOCK: RETAINER PLATE, 7/16 IN. SCREW SIZE MS35338-47 (96906)		EA	16	*	*	*	*	*	*	*	*	61	32
C XDFZZ		RETAINER, PLATE 5172670 (72582)		EA	2									61	33
PCFZZ	2815-691-9689	GASKET: BEARING RETAINING 5172673 (72582)		EA	2	*	*	*	*	*	*	*	*	61	34
PCFZZ	5330-298-0388	SEAL, PLAIN, ENCASED: OUTPUT SHAFT 5184576 (72582)		EA	2	*	*	*	*	*	*	*	*	61	35
PANZZ	3110-227-2994	BEARING: OUTPUT SHAFT, REAR 954496 (72582)		EA	2				*	*	*	*	*	61	36
PANZZ	2815-389-6059	SHAFT, SHOULDERED: TRANSFER GEAR 5171962 (72582)		EA	2				*	*	*	*	*	61	37
PAOZZ	2815-572-2103	CAP, BREATHER AND FILLER 1528732 (72582)		EA	2	*	*	*	*	*	*	*	*	61	38
PAOZZ	2815-318-9636	BREATHER AND BAFFLE: FILLER 5173471 (72582)		EA	2	*	*	*	*	*	*	*	*	61	39
C PAFZZ		SCREW, CAP, HEXAGON HEAD: HOUSING TO SUPPORT, 5/8-18 THD SIZE, 2 1/4 IN. LG 223812 (72582)	AB	EA	16	*	*	*	*	*	*	*	*	61	40
C PAFZZ	5310-820-6653	WASHER, LOCK: HOUSING TO SUPPORT, 5/8 IN. SCREW SIZE MS35338-50 (96906)	AB	EA	16	*	*	*	*	*	*	*	*	61	41
XDHZZ		HOUSING ASSEMBLY 5116636 (72582)		EA	2									61	42
XDFZZ		PLUG, PIPE 5173129 (72582)		EA	2									61	
C XDFZZ		PLUG, PIPE: COVER, 1/8 IN. 5145009 (72582)		EA	2									61	

(1) SMR CODE	(2) FEDERAL STOCK NUMBER	(3) DESCRIPTION REF NUMBER & MFR CODE	USABLE ON CODE	(4) UNIT OF MEAS	(5) QTY INC IN UNIT	(6) 30-DAY DS MAINT ALLOWANCE (a) 1-20	(b) 21-50	(c) 51-100	(7) 30-DAY GS MAINT ALLOWANCE (a) 1-20	(b) 21-50	(c) 51-100	(8) 1-YR ALW PER 100 EQUIP CNTGY	(9) DEPOT MAINT ALW PER 100 EQUIP	(10) ILLUSTRATION (a) FIG. NO.	(b) ITEM NO.
PAFZZ		PLUG, PIPE: COVER 5173129 (72582)		EA	2	*	*	*	*	*	*	*	*	61	
C XDFZZ		DECAL: ROTATION ARROW 5170507 (72582)		EA	2									61	
		GROUP 43 - GEAR ASSEMBLY, REVERSE													
PAFZZ	2815-791-9666	PISTON, CLUTCH: FORWARD 5189542 (72582)		EA	2	*	*	*	*	*	*	*	*	62	1
KFFZZ		SEAL ASSEMBLY 5192288 (72582) (PART OF KIT, FSN 5330-618-2020)		EA	2									62	2
PAFZZ	2010-545-3109	PLATE ASSEMBLY: FORWARD CLUTCH DISC 5188730 (72582)		EA	2	*	*	*	*	*	*	*	*	62	3
PAFZZ	5305-725-2317	SCREW, CAP, HEXAGON HEAD: FORWARD REACTION CLUTCH DISC MTG, 3/8-16 THD SIZE, 1 1/2 IN. LG MS90726-64 (96906)		EA	32	*	*	*	*	*	*	*	*	62	4
PAFZZ	5310-637-9541	WASHER, LOCK: FORWARD REACTION CLUTCH DISC MTG, 3/8 IN. SCREW SIZE MS35338-46 (96906)		EA	32	*	*	*	*	*	*	*	*	62	5
PAFZZ	2815-499-3593	SPRING: REVERSE CLUTCH RELEASE 6701093 (72582)		EA	29	*	*	*	*	*	*	*	*	62	6
PAFFH	2010-389-6070	GEAR ASSEMBLY: HYDRAULIC, MARINE 5115674 (72582)		EA	2	*	*	*	*	*	*	*	*	62	
C XDFZZ		HOUSING ASSEMBLY: REVERSE GEAR 6700902 (72582)		EA	1									62	7
R PAFZZ	5365-282-7392	RING, RETAINING: PLANE GEAR 6702989 (72582)		EA	1	*	*	*	*	*	*	*	*	62	8
PAFZZ	3120-416-4151	WASHER, THRUST: PLANE GEAR, RETAINING 6700169 (72582)		EA	1	*	*	*	*	*	*	*	*	62	9
PAFZZ	3120-661-4397	WASHER, THRUST: REVERSE SUN GEAR 6701096 (72582)		EA	1	*	*	*	*	*	*	*	*	62	10
R PAFZZ	2010-388-7154	GEAR, SPUR: REVERSE SUN 6701066 (72582)		EA	1	*	*	*	*	*	*	*	*	62	11
PAFZZ	3120-661-4397	WASHER, THRUST: REVERSE SUN GEAR 6701096 (72582)		EA	1	*	*	*	*	*	*	*	*	62	12
PAFZZ	2815-346-4551	GEAR ASSEMBLY: PLANETARY 6750772 (72582)		EA	1	*	*	*	*	*	*	*	*	62	13
C XAFZZ		COLLECTOR, OIL: PLANT GEAR 6701082 (72582)		EA	1									62	
XBFZZ		BOLT, MACHINE: GEAR CAGE 6700217 (72582)		EA	4									62	
XBFZZ		NUT, GEAR, CAGE 6700216 (72582)		EA	4									62	
C XAFZZ		BEARING, ROLLER: NEEDLE, PINION 6700213 (72582)		EA	352									62	
C XAFZZ		WASHER, THRUST: PINION BEARING 670998 (72582)		EA	16									62	
C XAFZZ		SHAFT, PINION GEAR 6701081 (72582)		EA	8									62	
XAFZZ		GEAR SET: PINION 6754754 (72582)		EA	1									62	
C XAFZZ		BALL: 3/16 DIA, STEEL MS19061-5 (96906)		EA	8									62	

(1) SMR CODE	(2) FEDERAL STOCK NUMBER	(3) DESCRIPTION REF NUMBER & MFR CODE / USABLE ON CODE	(4) UNIT OF MEAS	(5) QTY INC IN UNIT	(6) 30-DAY DS MAINT ALLOWANCE (a) 1-20	(b) 21-50	(c) 51-100	(7) 30-DAY GS MAINT ALLOWANCE (a) 1-20	(b) 21-50	(c) 51-100	(8) 1-YR ALW PER 100 EQUIP CNTGY	(9) DEPOT MAINT ALW PER 100 EQUIP	(10) ILLUSTRATION (a) FIG. NO.	(b) ITEM NO
PAFZZ	5310-786-3007	WASHER, THRUST: PLANETARY GEAR 6770522 (72582)	EA	1	*	*	*	*	*	*	*	*	62	14
PAFZZ	5365-263-5936	RING, RETAINING: REACTION PLATE 6700119 (72582)	EA	1	*	*	*	*	*	*	*	*	62	15
PAFZZ	2010-499-3586	PLATE, CLUTCH: REVERSE 6701049 (72582)	EA	1	*	*	*	*	*	*	*	*	62	16
PAFZZ	5315-014-1198	PIN, STRAIGHT, HEADLESS: PLATE, 1/4 IN. DIA, 13/16 IN. LG 141198 (72582)	EA	3	*	*	*	*	*	*	*	*	62	17
PAFZZ	2815-499-3593	SPRING: REVERSE CLUTCH RELEASE 6701093 (72582)	EA	3	*	*	*	*	*	*	*	*	62	18
C PAFZZ	2815-322-9934	GEAR, INTERNAL: REVERSE, RING 6751008 (72582)	EA	1	*	*	*	*	*	*	*	*	62	19
PAFZZ	2010-547-7941	DISC, CLUTCH: REVERSE PLATE 6751597 (72582)	EA	1	*	*	*	*	*	*	*	*	62	20
C PAFZZ	5365-263-5938	RING, RETAINING: DISC PLATE 6701070 (72582)	EA	1	*	*	*	*	*	*	*	*	62	21
PAFZZ	2815-499-3585	PISTON, CLUTCH: REVERSE 6700545 (72582)	EA	1	*	*	*	*	*	*	*	*	62	22
KFFZZ		SEAL ASSEMBLY: REVERSE PISTON 5192289 (72582) (PART OF KIT, FSN 5330-618-2020)	EA	1									62	23
PAFZZ	2815-499-3592	SLEEVE: REVERSE GEAR HOUSING 6700509 (72582)	EA	1	*	*	*	*	*	*	*	*	62	24
PAFZZ	5306-589-3000	BOLT, MACHINE: GEAR HOUSING 5176959 (72582)	EA	11	*	*	*	*	*	*	*	*	62	
PAFZZ	5315-980-1578	PIN: REVERSE GEAR 5130672 (72582)	EA	3	*	*	*	*	*	*	*	*	62	
PAFZZ	2010-110-1881	SHAFT ASSEMBLY: REVERSE GEAR DRIVE 6756882 (72582)	EA	1	*	*	*	*	*	*	*	*	62	
XAFZZ		TUBE SHAFT ASSEMBLY: REVERSE SHAFT DRIVE 6701090 (72582)	EA	1									62	
PAFZZ	2010-937-5599	RING: SNAP TUBE RETAINING 6702351 (72582)	EA	1	*	*	*	*	*	*	*	*	62	
C PAFZZ	5310-566-0619	WASHER, RECESSED: DRIVE SHAFT 6751912 (72582)	EA	1	*	*	*	*	*	*	*	*	62	
PAFZZ	3120-346-4552	WASHER, THRUST: DRIVE SHAFT 6751913 (72582)	EA	1	*	*	*	*	*	*	*	*	62	
PAFZZ	5365-516-4141	RING, RETAINING: DRIVE SHAFT, OIL SEAL 6700508 (72582)	EA	3	*	*	*	*	*	*	*	*		
PAFZZ	2010-416-4156	DISC, CLUTCH: FORWARD REACTION 5171419 (72582)	EA	4	*	*	*	*	*	*	*	*		
PAFZZ	5305-688-2111	SCREW, CAP, HEXAGON HEAD: MARINE GEAR MTG, 3/8-16 X 1 3/8 IN. LG MS90728-63 (96906)	EA	20	*	*	*	*	*	*	*	*		
PAFZZ	5310-637-9541	WASHER, LOCK: MARINE GEAR MTG, 3/8 IN. MS35338-46 (96906)	EA	20	*	*	*	*	*	*	*	*		
PAFZZ	5306-973-1410	SCREW, CAP, HEXAGON HEAD: MARINE GEAR MTG, 3/8-16 X 6 IN. LG 186290 (72582)	EA	4	*	*	*	*	*	*	*	*		

(1) SMR CODE	(2) FEDERAL STOCK NUMBER	(3) DESCRIPTION REF NUMBER & MFR CODE / USABLE ON CODE	(4) UNIT OF MEAS	(5) QTY INC IN UNIT	(6) 30-DAY DS MAINT ALLOWANCE (a) 1-20	(b) 21-50	(c) 51-100	(7) 30-DAY GS MAINT ALLOWANCE (a) 1-20	(b) 21-50	(c) 51-100	(8) 1-YR ALW PER 100 EQUIP CNTGY	(9) DEPOT MAINT ALW PER 100 EQUIP	(10) ILLUSTRATION (a) FIG. NO.	(b) ITEM NO.
PAFZZ	5310-193-9753	WASHER, FLAT: MARINE GEAR MTG, 3/8 IN. COPPER 5226029 (72582)	EA	4	*	*	*	*	*	*	*	*		
KFFZZ		GASKET: GEAR BOX TO GEAR HOUSING 5167651 (72582) (PART OF KIT, FSN 5330-618-2020)	EA	2										
KFFZZ		GASKET: HOUSING, REVERSE GEAR 5170683 (72582) (PART OF KIT, FSN 5330-618-2020)	EA	2										
PAOZZ	2910-588-8439	TUBE ASSEMBLY: REVERSE GEAR 5171197 (72582)	EA	2	*	*	*	*	*	*	*	*		
PAOZZ	4710-457-8626	TUBE: D ENGINE TRANSFER GEAR 5119768 (72582)	EA	1	*	*	*	*	*	*	*	*		
PAOZZ	4710-457-8628	TUBE: B ENGINE TRANSFER GEAR 5119769 (72582)	EA	1	*	*	*	*	*	*	*	*		
PAOZZ	5306-226-4826	BOLT, MACHINE: 5/16-18 X 7/8 IN. LG MS90728-33 (96906)	EA	8	*	*	*	*	*	*	*	*		
PAOZZ	5310-407-9566	WASHER, LOCK: 5/16 IN. SCREW SIZE MS35338-45 (96906)	EA	6	*	*	*	*	*	*	*	*		
PCOZZ	5330-641-8507	GASKET: OIL DRAIN TUBE 5171244 (72582)	EA	4	*	*	*	*	*	*	*	*		
PCOZZ	4720-278-5049	HOSE, PREFORMED: OIL DRAIN TUBE 5171249 (72582)	EA	2	*	*	*	*	*	*	*	*		
XDOZZ		CLAMP: OIL DRAIN HOSE, 1 5/8 IN. MS35842-12 (96906)	EA	4										
PAFZZ	5305-004-3229	SCREW, CAP, HEXAGON HEAD: 3/4-16 X 2 3/4 IN. LG 5169887 (72582)	EA	4	*	*	*	*	*	*	*	*		
PAFZZ	5310-363-8046	NUT, LOCKING: 3/4-16 IN. 451082 (72582)	EA	4	*	*	*	*	*	*	*	*		
PCFZZ	5330-618-2020	KIT, GASKET: HYDRAULIC GEAR ASSEMBLY 5193753 (72582)	EA	1	*	*	*	*	*	*	*	*	62	
		2-SEAL ASSEMBLY											62	2
		1-SEAL ASSEMBLY											62	23
		2-GASKET												
		2-GASKET												
		2-GASKET												
		2-GASKET												
		2-GASKET												
		2-GASKET												

(1) SMR CODE	(2) FEDERAL STOCK NUMBER	(3) DESCRIPTION REF NUMBER & MFR CODE / USABLE ON CODE	(4) UNIT OF MEAS	(5) QTY INC IN UNIT	(6) 30-DAY DS MAINT ALLOWANCE (a) 1-20	(b) 21-50	(c) 51-100	(7) 30-DAY GS MAINT ALLOWANCE (a) 1-20	(b) 21-50	(c) 51-100	(8) 1-YR ALW PER 100 EQUIP CNTGY	(9) DEPOT MAINT ALW PER 100 EQUIP	(10) ILLUSTRATION (a) FIG. NO.	(b) ITEM NO.
		GROUP 44 - FLYWHEEL HOUSING												
XDOZZ		GAGE, LIQUID LEVEL: FLYWHEEL HOUSING 5109288 (72582)	EA	4									63	1
XDOZZ		CLAMP, LOOP: 1/2 IN. DIP STICK ADAPTER MS21333-59 (96906)	EA	4									63	2
XDOZZ		ADAPTER ASSEMBLY, OIL LEVEL GAGE 5109765 (72582)	EA	4									63	3
XDOZZ		ELBOW, INVERTER TUBE: 1/2 IN. 90 DEG DIP STICK ADAPTER 137425 (72582)	EA	4									63	4
PAOZZ	2815-572-2103	CAP, FLYWHEEL HOUSING BREATHER 1528732 (72582)	EA	4	•	•	•	•	•	•	•	•	63	5
C XDOZZ		TUBE, FLYWHEEL HOUSING BREATHER 5191238 (72582)	EA	2									63	6
PAFZZ	5305-044-4153	SCREW, CAP, HEXAGON HEAD: LARGE FLYWHEEL HOUSING COVER, 1/2-13 THD SIZE, 1 IN. LG 100158 (72582)	EA	16	•	•	•	•	•	•	•	•	63	7
PAFZZ	5310-584-5272	WASHER, LOCK: LARGE FLYWHEEL HOUSING COVER SCREW, 1/2 IN. SCREW SIZE MS35338-48 (96906)	EA	16	•	•	•	•	•	•	•	•	63	8
PAFZZ		SCREW, CAP, HEXAGON HEAD: LARGE FLYWHEEL HOUSING COVER, 7/16-14 THD SIZE, 7/8 IN. LG 179857 (72582)	EA	4	•	•	•	•	•	•	•	•	63	9
PAFZZ	5310-595-6852	WASHER, COPPER: LARGE FLYWHEEL HOUSING COVER SCREW 5150568 (72582)	EA	4	•	•	•	•	•	•	•	•	63	10
XDFZZ		COVER: FLYWHEEL HOUSING 5122281 (72582)	EA	4									63	11
C KFFZZ		GASKET: FLYWHEEL HOUSING LARGE HOLE COVER 5117061 (72582) (PART OF GASKET SET, FSN 2815-379-4301)	EA	4									63	12
PAOZZ	5305-269-3210	SCREW, CAP, HEXAGON HEAD: FLYWHEEL HOUSING INSPECTION HOLE COVER, 3/8-16 THD SIZE, 7/8 IN. LG MS90725-59 (96906)	EA	16	•	•	•	•	•	•	•	•	63	13
PAOZZ	5310-637-9541	WASHER, LOCK: FLYWHEEL HOUSING INSPECTION HOLE COVER, 3/8 IN. SCREW SIZE MS35338-46 (96906)	EA	16	•	•	•	•	•	•	•	•	63	14
XBOZZ		COVER, FLYWHEEL HOUSING: INSPECTION HOLE 5170961 (72582)	EA	4									63	15
PCOZZ	2815-363-8334	GASKET: FLYWHEEL HOUSING INSPECTION HOLE COVER 5170895 (72582)	EA	4	•	•	•	•	•	•	•	•	63	16
PAFZZ	5310-732-0559	NUT, PLAIN, HEXAGON: FLYWHEEL HOUSING MTG, 3/8-24 THD SIZE MS51968-8 (96906)	EA	16	•	•	•	•	•	•	•	•	63	17
PAFZZ	5310-637-9541	WASHER, LOCK: FLYWHEEL HOUSING MTG, 3/8 IN. SCREW SIZE MS35338-46 (96906)	EA	40	•	•	•	•	•	•	•	•	63	18
PAFZZ	5305-269-2819	SCREW, CAP, HEXAGON HEAD: FLYWHEEL HOUSING MTG, 3/8-24 THD SIZE, 1 1/4 IN. LG 186314 (72582)	EA	16	•	•	•	•	•	•	•	•	63	19

	(1) SMR CODE	(2) FEDERAL STOCK NUMBER	(3) DESCRIPTION REF NUMBER & MFR CODE	USABLE ON CODE	(4) UNIT OF MEAS	(5) QTY INC IN UNIT	(6) 30-DAY DS MAINT ALLOWANCE (a) 1-20	(b) 21-50	(c) 51-100	(7) 30-DAY GS MAINT ALLOWANCE (a) 1-20	(b) 21-50	(c) 51-100	(8) 1-YR ALW PER 100 EQUIP CNTGY	(9) DEPOT MAINT ALW PER 100 EQUIP	(10) ILLUSTRATION (a) FIG. NO.	(b) ITEM NO.
	PAFZZ	5310-080-6004	WASHER, FLAT: FLYWHEEL HOUSING MTG, 3/8 IN. SCREW SIZE MS27183-14 (96906)		EA	32	•	•	•	•	•	•	•	•	63	20
	PAFZZ	5305-269-3211	SCREW, CAP, HEXAGON HEAD: FLYWHEEL HOUSING MTG, 3/8-16 THD SIZE, 1 IN. LG MS90725-60 (96906)		EA	8	•	•	•	•	•	•	•	•	63	21
	PAFZZ	5305-071-2076	SCREW, CAP, HEXAGON HEAD: FLYWHEEL HOUSING MTG, 1/2-13 THD SIZE, 3 1/4 IN. LG MS90728-120 (96906)		EA	24	•	•	•	•	•	•	•	•	63	22
	PAFZZ	5310-584-5272	WASHER, LOCK: FLYWHEEL HOUSING MTG, 1/2 IN. SCREW SIZE MS35338-48 (96906)		EA	24	•	•	•	•	•	•	•	•	63	23
	PAFZZ	3930-057-8492	BOLT, SELF-LOCK: FLYWHEEL HOUSING MTG, 3/8-16 THD SIZE, 1 IN. LG 9409028 (72582)		EA	24	•	•	•	•	•	•	•	•	63	24
	XDFZZ		HOUSING, FLYWHEEL: D ENGINE 5186329 (72582)		EA	2									63	25
	XDFZZ		HOUSING, FLYWHEEL: B ENGINE 5186328 (72582)		EA	2									63	25
C	KFFZZ		GASKET: FLYWHEEL HOUSING 5150054 (72582) (PART OF SET, FSN 5330-379-4301)		EA	4									63	26
	PAFZZ	4730-289-5176	PLUG, PIPE: FLYWHEEL HOUSING, 1/2 IN. MS49005-8 (96906)		EA	8	•	•	•	•	•	•	•	•	63	27
	PAFZZ	4730-604-7953	PLUG, PIPE: FLYWHEEL HOUSING, 1 IN. 5111798 (72582)		EA	4	•	•	•	•	•	•	•	•	63	28
	PAFZZ	5306-785-1102	BOLT, MACHINE: FLYWHEEL MTG 9411631 (72582)		EA	24	•	•	•	•	•	•	•	•	64	1
	XDFZZ		RETAINER: PILOT BEARING 5110784 (72582)		EA	4									64	2
	PAFZZ	2815-389-6036	FLYWHEEL ASSEMBLY 5119849 (72582)		EA	4	•	•	•	•	•	•	•	•	64	3
	PAFZZ	3110-766-2360	BEARING, BALL: FLYWHEEL PILOT 907084 (72582)		EA	4	•	•	•	•	•	•	•	•	64	4
C	PAFZZ	5315-151-4374	PIN: FORWARD CLUTCH 5120017 (72582)		EA	6	•	•	•	•	•	•	•	•	64	5
	PAFZZ	5306-416-4153	BOLT, MACHINE: FORWARD CLUTCH ENGAGEMENT, 1/2-13 THD SIZE, 1 3/4 IN. LG 5171411 (72582)		EA	12	•	•	•	•	•	•	•	•	64	6
C	PAFZZ	5365-804-7694	RING, RETAINING: SNAP FLYWHEEL MS16625-200 (96906)		EA	2	•	•	•	•	•	•	•	•	64	7
	PCFZZ	5330-292-0816	SEAL, PLAIN, ENCASED: FLYWHEEL 5173384 (72582)		EA	2	•	•	•	•	•	•	•	•	64	8
	PAFZZ	2815-272-6028	GEAR, SPUR: FLYWHEEL RING 5188030 (72582)		EA	4	•	•	•	•	•	•	•	•	64	9
	PAFZZ	4720-112-4558	PLUG, PIPE: DUMP VALVE SPRING, 7/8-9 THD SIZE 5119824 (72582)		EA	4	•	•	•	•	•	•	•	•	64	10
	PAFZZ	2815-902-1870	VALVE, FORWARD: CLUTCH, DUMP 5119848 (72582)		EA	2	•	•	•	•	•	•	•	•	64	11
	PAFZZ	2815-527-2322	SPRING, HELICAL, COMPRESSION: FORWARD DUMP VALVE 5156815 (72582)		EA	4	•	•	•	•	•	•	•	•	64	12

(1) SMR CODE	(2) FEDERAL STOCK NUMBER	(3) DESCRIPTION REF NUMBER & MFR CODE	USABLE ON CODE	(4) UNIT OF MEAS	(5) QTY INC IN UNIT	(6) 30-DAY DS MAINT ALLOWANCE (a) 1-20	(b) 21-50	(c) 51-100	(7) 30-DAY GS MAINT ALLOWANCE (a) 1-20	(b) 21-50	(c) 51-100	(8) 1-YR ALW PER 100 EQUIP CNTGY	(9) DEPOT MAINT ALW PER 100 EQUIP	(10) ILLUSTRATION (a) FIG. NO.	(b) ITEM NO.
PAFZZ	5340-237-8324	PLUG, EXPANSION: VERTICAL OIL PASSAGE 5150130 (72582)		EA	2	•	•	•	•	•	•	•	•	64	
XDFZZ		PLUG, PIPE: HORIZONTAL OIL PASSAGE 272480 (72582)		EA	2									64	
PAFZZ	5360-437-8792	SPRING: CLUTCH PLATE 5194464 (72582)		EA	12	•	•	•	•	•	•	•	•	64	
PCOZZ		HOSE ASSEMBLY: FLEXIBLE OIL STRAINER 5144540 (72582)		EA	2	•	•	•	•	•	•	•	•	64	
PAOZZ	4730-389-6066	FLANGE, PIPE, OIL HOSE 5185772 (72582)		EA	2	•	•	•	•	•	•	•	•	64	
C XDOZZ		CONNECTOR TUBE: OIL STRAINER 7182621 (18877)		EA	4									64	
XDOZZ		ELBOW, STREET: OIL STRAINER TUBE 108687 (72582)		EA	2									64	
XDOZZ		ELBOW, STREET: OIL STRAINER TUBE 144116 (72582)		EA	2									64	
PAOZZ	5305-068-0511	SCREW, CAP, HEXAGON HEAD: OIL TUBE FLANGE, 3/8-16 THD SIZE, 1 1/4 IN. LG MS90728-62 (96906)		EA	4	•	•	•	•	•	•	•	•	64	
PAOZZ	5310-637-9541	WASHER, LOCK: OIL TUBE FLANGE, 3/8 IN. SCREW SIZE MS35338-46 (96906)		EA	4	•	•	•	•	•	•	•	•	64	
PCOZZ	4720-557-9635	TUBE ASSEMBLY: FLEXIBLE OIL GAGE 5144634 (72582)		EA	1	•	•	•	•	•	•	•	•	64	
PAOZZ	4730-987-3620	FITTING: RESTRICTED OIL GAGE 1508350 (72582)		EA	1	•	•	•	•	•	•	•	•	64	
XDOZZ		ELBOW, STREET: OIL GAGE 444052 (72582)		EA	1									64	
PAFZZ	3110-087-0373	BEARING: CLUTCH PILOT Z99605X1978 (43334)		EA	1	•	•	•	•	•	•	•	•		
		GROUP 45 - POWER TAKE-OFF COUPLING AND VIBRATION DAMPER													
PAFZZ	3110-462-4172	BEARING: CLUTCH PILOT 55606LIC (43334)		EA	1	•	•	•	•	•	•	•	•	65	1
XDFZZ		RETAINER: CLUTCH BEARING PILOT 5167276 (72582)		EA	1									65	2
PAFZZ	5306-272-4250	BOLT, MACHINE: POWER TAKE-OFF COUPLING 5153623 (72582)		EA	1	•	•	•	•	•	•	•	•	65	3
PAFZZ	5310-220-6583	WASHER, FLAT: POWER TAKE-OFF COUPLING 5157930 (72582)		EA	1	•	•	•	•	•	•	•	•	65	4
PAFZZ	5305-354-1227	SCREW, CAP, HEXAGON HEAD: ADAPTER MTG, 3/8-16 THD SIZE, 1 3/4 IN. LG 5157244 (72582)		EA	6	•	•	•	•	•	•	•	•	65	5
PAFZZ	5310-637-9541	WASHER, LOCK: ADAPTER MTG, 3/8 IN. SCREW SIZE MS35338-46 (96906)		EA	18	•	•	•	•	•	•	•	•	65	6
XDFZZ		ADAPTER: POWER TAKE-OFF CLUTCH 5167265 (72582)		EA	1									65	7
XDFZZ		COUPLING ASSEMBLY, POWER TAKE-OFF 5167273 (72582)		EA	1									65	8
PAFZZ	5315-616-5531	KEY, WOODRUFF: COUPLING, 3/8 X 1 1/4 IN. LG MS35756-24 (96906)		EA	2	•	•	•	•	•	•	•	•	65	9

(1) SMR CODE	(2) FEDERAL STOCK NUMBER	(3) DESCRIPTION REF NUMBER & MFR CODE	USABLE ON CODE	(4) UNIT OF MEAS	(5) QTY INC IN UNIT	(6) 30-DAY DS MAINT ALLOWANCE (a) 1-20	(b) 21-50	(c) 51-100	(7) 30-DAY GS MAINT ALLOWANCE (a) 1-20	(b) 21-50	(c) 51-100	(8) 1-YR ALW PER 100 EQUIP CNTGY	(9) DEPOT MAINT ALW PER 100 EQUIP	(10) ILLUSTRATION (a) FIG. NO.	(b) ITEM NO.
XUFZZ		PULLEY, GROOVE: CRANKSHAFT 5169905 (72582)		EA	1									65	10
PAFZZ	5305-710-4191	SCREW, CAP, HEXAGON HEAD: DAMPER MTG, 7/16-20 THD SIZE, 1 1/8 IN. LG MS90726-86 (96906)		EA	24	•	•	•	•	•	•	•	•	65	11
PAFZZ	5310-209-0965	WASHER, LOCK: DAMPER MTG, 7/16 IN. SCREW SIZE MS35338-47 (96906)		EA	24	•	•	•	•	•	•	•	•	65	12
XDFZZ		DAMPER, VIBRATION: LIGHT 5176767 (72582)		EA	1									65	13
XDFZZ		DAMPER, VIBRATION: HEAVY 5156285 (72582)		EA	1									65	14
PAFZZ	2815-560-6095	CONE, VIBRATION DAMPER: 17/32 IN. LG 5158641 (72582)		EA	1	•	•	•	•	•	•	•	•	65	15
PAFZZ	5315-238-0843	PIN, STRAIGHT, HEADLESS: HUB ASSEMBLY, 7/16 IN. DIA, 1 IN. LG 5156295 (72582)		EA	1	•	•	•	•	•	•	•	•	65	16
XDFZZ		HUB ASSEMBLY, VIBRATION DAMPER 5156296 (72582)		EA	1									65	17
PAFZZ	2815-416-3923	CONE VIBRATION DAMPER: 2 1/8 IN. LG 5158640 (72582)		EA	1	•	•	•	•	•	•	•	•	65	18
R PCFZZ	5330-154-8358	SEAL: POWER TAKE-OFF HOUSING 5115454 (72582)		EA	6	•	•	•	•	•	•	•	•	65	19
PAFZZ	5305-071-2076	SCREW, CAP, HEXAGON HEAD: HOUSING MTG, 1/2-13 THD SIZE, 3 1/4 IN. LG MS90728-120 (96906)		EA	2	•	•	•	•	•	•	•	•	65	20
PAFZZ	5310-584-5272	WASHER, LOCK: HOUSING MTG, 1/2 IN. SCREW SIZE MS35338-48 (96906)		EA	3	•	•	•	•	•	•	•	•	65	21
C PAFZZ	5305-269-3216	SCREW, CAP, HEXAGON HEAD: HOUSING MTG, 3/8-16 THD SIZE, 2 IN. LG MS90725-66 (96906)		EA	2	•	•	•	•	•	•	•	•	65	22
PAFZZ	5310-637-9541	WASHER, LOCK: HOUSING MTG, 3/8 IN. SCREW SIZE MS35338-46 (96906)		EA	2	•	•	•	•	•	•	•	•	65	23
C PAFZZ	5305-071-2074	SCREW, CAP, HEXAGON HEAD: HOUSING MTG, 1/2-13 THD SIZE, 2 3/4 IN. LG MS90728-118 (96906)		EA	4	•	•	•	•	•	•	•	•	65	24
PAFZZ	5310-584-5272	WASHER, LOCK: HOUSING MTG, 1/2 IN. SCREW SIZE MS35338-48 (96906)		EA	4	•	•	•	•	•	•	•	•	65	25
PAFZZ	5310-732-0560	NUT, PLAIN, HEXAGON: ADAPTER MTG, 1/2-20 THD SIZE 117051 (72582)		EA	1	•	•	•	•	•	•	•	•	65	26
PAFZZ	5305-206-6235	SCREW, CAP, HEXAGON HEAD: BRACKET MTG, 1/2-20 THD SIZE, 1 3/4 IN. LG 181433 (72582)		EA	1	•	•	•	•	•	•	•	•	65	27
PAFZZ	5305-071-2067	SCREW, CAP, HEXAGON HEAD: BRACKET MTG, 1/2-13 THD SIZE, 1 1/4 IN. LG MS90728-111 (96906)		EA	1	•	•	•	•	•	•	•	•	65	28
XDFZZ		BRACKET, SUPPORT: POWER TAKE-OFF 5172451 (72582)		EA	1									65	29
XDFZZ		ADAPTER, HOUSING, POWER TAKE-OFF 5176128 (72582)		EA	1									65	30

	(1) SMR CODE	(2) FEDERAL STOCK NUMBER	(3) DESCRIPTION REF NUMBER & MFR CODE	USABLE ON CODE	(4) UNIT OF MEAS	(5) QTY INC IN UNIT	(6) 30-DAY DS MAINT ALLOWANCE (a) 1-20	(b) 21-50	(c) 51-100	(7) 30-DAY GS MAINT ALLOWANCE (a) 1-20	(b) 21-50	(c) 51-100	(8) 1-YR ALW PER 100 EQUIP CNTGY	(9) DEPOT MAINT ALW PER 100 EQUIP	(10) ILLUSTRATION (a) FIG. NO.	(b) ITEM NO.
	PCFZZ	5330-303-1160	GASKET; POWER TAKE-OFF ADAPTER 5169710 (72582)		EA	6	•	•	•	•	•	•	•	•	65	31
	XDFZZ		SPACER, VIBRATION DAMPER 5179588 (72582)		EA	4										
			GROUP 46 - ROCKER ARM													
	PAFZZ	4730-212-6331	BOLT, INTERNALLY DRILLED ROCKER SHAFT BRACKET 5150325 (72582)		EA	48	•	•	•	•	•	•	•	•	66	1
	XDFZZ		BRACKET, EYE, ROCKER ARM SHAFT 5150324 (72582)		EA	48									66	2
	PAFZZ	2815-532-8082	ROCKER ARM ASSEMBLY; LEFT 5150304 (72582)		EA	24	•	•	•	•	•	•	•	•	66	3
	XAFZZ		PIN, HOLLOW CLEVIS 5150314 (72582)		EA	72									66	4
	XAFZZ		CLEVIS, ROD END; PUSH ROD 5150312 (72582)		EA	72									66	5
	XAFZZ		BUSHING SLEEVE 5123700 (72582)		EA	72									66	6
R	XAFZZ		BEARING SLEEVE, SMALL 5150311 (72582)		EA	72									66	7
	XAFZZ		BUSHING, SLEEVE, LARGE 5122445 (72582) (USED ON ROCKER ARM, FSN 2815-532-8082 AND 2815-345-6074, ONLY)		EA	48									66	8
	PAFZZ	2815-600-5567	ROCKER ARM ASSEMBLY, INJECTOR 5179954 (72582) (INCLUDES SAME COMPONENTS AS ROCKER ARM, FSN 2815-532-8082, EXCEPT WHERE ANNOTATED)		EA	24	•	•	•	•	•	•	•	•	66	9
	XAFZZ		BUSHING, SLEEVE, LARGE 5150318 (72582)		EA	24									66	10
	PAFZZ	2815-345-6074	ROCKER ARM ASSEMBLY 5150305 (72582)		EA	24	•	•	•	•	•	•	•	•	66	11
	PAFZZ	2815-364-3307	SHAFT ASSEMBLY, ROCKER ARM 5150322 (72582)		EA	24	•	•	•	•	•	•	•	•	66	12
C	XAFZZ		PLUG, STRAIGHT, HEADLESS 5151272 (72582)		EA	24									66	13
	PAFZZ	5310-270-7111	NUT, PLAIN, HEXAGON; PUSH ROD 5151601 (72582)		EA	72	•	•	•	•	•	•	•	•	66	14
R	PAFZZ	5365-282-5031	RING, RETAINING, PUSH ROD 5150303 (72582)		EA	72	•	•	•	•	•	•	•	•	66	15
R	PAFZZ	2815-885-5731	SEAT, SPRING, PUSH ROD, UPPER 5150302 (72582)		EA	72	•	•	•	•	•	•	•	•	66	16
	PAFZZ	2815-252-8444	SPRING, HELICAL COMPRESSION; PUSH ROD 5186858 (72582)		EA	72	•	•	•	•	•	•	•	•	66	17
	PAFZZ	2815-885-5731	SEAT, SPRING, PUSH ROD, LOWER 5123250 (72582)		EA	72	•	•	•	•	•	•	•	•	66	18
	PAFZZ	2815-345-6073	ROD, PUSH; ROCKER ARM 5128640 (72582)		EA	72	•	•	•	•	•	•	•	•	66	19
	PAFZZ	2815-567-4398	FOLLOWER ASSEMBLY, CAM 5115087 (72582)		EA	72	•	•	•	•	•	•	•	•	66	20
	XAFZZ		ROLLER SET 5195220 (72582)		EA	72									66	21

(1) SMR CODE	(2) FEDERAL STOCK NUMBER	(3) DESCRIPTION REF NUMBER & MFR CODE	USABLE ON CODE	(4) UNIT OF MEAS	(5) QTY INC IN UNIT	(6) 30-DAY DS MAINT ALLOWANCE (a) 1-20	(b) 21-50	(c) 51-100	(7) 30-DAY GS MAINT ALLOWANCE (a) 1-20	(b) 21-50	(c) 51-100	(8) 1-YR ALW PER 100 EQUIP CNTGY	(9) DEPOT MAINT ALW PER 100 EQUIP	(10) ILLUSTRATION (a) FIG NO.	(b) ITEM NO.
		GROUP 47 - CYLINDER HEAD													
PAFZZ	5310-220-6765	NUT, PLAIN, HEXAGON: CYLINDER HEAD, 5/8-18 THD SIZE 5150013 (72582)		EA	8	•	•	•	•	•	•	•	•	67	1
PAFZZ	5306-826-5257	BOLT, MACHINE: CYLINDER HEAD 5117003 (72582)		EA	48	•	•	•	•	•	•	•	•	67	2
PAFZZ	2815-288-4869	LOCK, VALVE, SPRING 838029 (72582)		EA	96	•	•	•	•	•	•	•	•	67	3
PAFZZ	2815-362-9385	RETAINER, SPRING, EXHAUST VALVE 5150291 (72582)		EA	48	•	•	•	•	•	•	•	•	67	4
PAFZZ	2815-664-4216	SPRING, HELICAL COMPRESSION: EXHAUST VALVE 5150289 (72582)		EA	48	•	•	•	•	•	•	•	•	67	5
PAFZZ	2815-275-0502	WASHER, SHOULDERED: EXHAUST VALVE SPRING 5150292 (72582)		EA	48	•	•	•	•	•	•	•	•	67	6
PAFZZ	2815-699-1544	VALVE, POPPET, ENGINE 5193197 (72582)		EA	48	•	•	•	•	•	•	•	•	67	7
PAFZZ	5305-068-0508	SCREW, CAP, HEXAGON HEAD: CAMSHAFT FOLLOWER GUIDE, 1/4-20 THD SIZE, 3/4 IN. LG MS90728-6 (96906)		EA	48	•	•	•	•	•	•	•	•	67	8
PAFZZ	5310-582-5965	WASHER, LOCK: CAMSHAFT FOLLOWER GUIDE, 1/4 IN. SCREW SIZE MS35338-44 (96906)		EA	48	•	•	•	•	•	•	•	•	67	9
XDFZZ		GUIDE, CAMSHAFT FOLLOWER 5150298 (72582)		EA	24									67	10
PAFZZ	5305-068-0500	SCREW, CAP, HEXAGON HEAD: CYLINDER HEAD, GOVERNOR HOLE COVER, 1/4-20 THD SIZE, 1/2 IN. LG MS90725-3 (96906)		EA	24	•	•	•	•	•	•	•	•	67	11
C PAFZZ	5310-582-5965	WASHER, LOCK: CYLINDER HEAD, GOVERNOR HOLE COVER, 1/4 IN. SCREW SIZE MS35338-44 (96906)		EA	24	•	•	•	•	•	•	•	•	67	12
XFFZZ		COVER, CYLINDER HEAD, GOVERNOR HOLE 5150268 (72582)		EA	12									67	13
C KFFZZ		GASKET: CYLINDER HEAD, GOVERNOR HOLE COVER 5150269 (72582) (PART OF GASKET SET, FSN 5330-379-4301)		EA	6									67	14
R XDFZZ		PLUG, PIPE: 1/2 IN., CYLINDER HEAD 444873 (72582)		EA	24									67	15
KFFZZ		GASKET: CYLINDER HEAD, OIL RING SEAL 5119974 (72582) (PART OF SET, FSN 5330-379-4301)		EA	4									67	16
KFFZZ		GASKET: RING SEAL, WATER HOLE 5186579 (72582) (PART OF SET, FSN 5330-379-4301)		EA	40									67	17
KFFZZ		WASHER, NONMETALLIC: CYLINDER HEAD 5186577 (72582) (PART OF SET, FSN 5330-379-4301)		EA	8									67	18
KFFZZ		GASKET: CYLINDER HEAD COMPRESSION 5183330 (72582) (PART OF KIT, FSN 5330-363-7092)		EA	24									67	19

(1) SMR CODE	(2) FEDERAL STOCK NUMBER	(3) DESCRIPTION REF NUMBER & MFR CODE / USABLE ON CODE	(4) UNIT OF MEAS	(5) QTY INC IN UNIT	(6) 30-DAY DS MAINT ALLOWANCE (a) 1-20	(b) 21-50	(c) 51-100	(7) 30-DAY GS MAINT ALLOWANCE (a) 1-20	(b) 21-50	(c) 51-100	(8) 1-YR ALW PER 100 EQUIP CNTGY	(9) DEPOT MAINT ALW PER 100 EQUIP	(10) ILLUSTRATION (a) FIG. NO.	(b) ITEM NO.
KFFZZ		GASKET: CYLINDER HEAD, WATER AND OIL 5183305 (72582) (PART OF SET, FSN 5330-379-4301)	EA	8									67	20
PAFFF	2815-678-4019	CYLINDER HEAD ASSEMBLY, DIESEL ENGINE 5198217 (72582)	EA	4	•	•	•	•	•	•	•	•	67	21
C XDFZZ		PLUG, MACHINE: SLOTTED HEAD, 3/8-16 IN. 5154453 (72582)	EA	16									67	22
XDFZZ		PLUG, PIPE: 3/8-18 IN. 444867 (72582)	EA	8									67	23
XDFZZ		PLUG, PIPE: 1/4 IN. 5125237 (72582)	EA	16									67	24
PAFZZ	2910-364-3439	TUBE, INJECTOR, HOLE 5150041 (72582)	EA	24	•	•	•	•	•	•	•	•	67	25
PCFZZ	5330-599-0505	PACKING, PREFORMED: INJECTOR 5160037 (72582)	EA	24	•	•	•	•	•	•	•	•	67	26
XDFZZ		PLUG, PIPE: HEXAGON SOCKET, 1/4 IN. 5121182 (72582)	EA	52									67	27
PAFZZ	2815-354-1443	GUIDE, ENGINE VALVE 5120930 (72582)	EA	48	•	•	•	•	•	•	•	•	67	28
PAFZZ	2815-354-1532	INSERT, VALVE SEAT 5121096 (72582)	EA	48	•	•	•	•	•	•	•	•	67	29
PAFZZ	2815-119-2687	NOZZLE, WATER, SINGLE OUTLET 5172874 (72582)	EA	16	•	•	•	•	•	•	•	•	67	30
PAFZZ	2815-363-7984	NOZZLE, WATER, DOUBLE OUTLET 5172875 (72582)	EA	40	•	•	•	•	•	•	•	•	67	31
PAFZZ	2910-446-6602	CONNECTOR, FUEL LINE 5117369 (72582)	EA	48	•	•	•	•	•	•	•	•	67	32
PAOZZ	5310-785-3961	WASHER, FLAT: FUEL LINE CONNECTOR 5125108 (72582)	EA	48	•	•	•	•	•	•	•	•	67	33
PAFZZ	5307-550-1879	STUD, PLAIN: EXHAUST MANIFOLD 5112899 (72582)	EA	28	•	•	•	•	•	•	•	•	67	34
PAFZZ	5307-273-9380	STUD, PLAIN: WATER MANIFOLD 5150362 (72582)	EA	48	•	•	•	•	•	•	•	•	67	35
		GROUP 48 - CAM AND BALANCE SHAFT BEARING, GEARS AND WEIGHTS												
PAHZZ	5306-775-7026	SCREW, CAP, HEXAGON HEAD: BALANCE WEIGHT COVER, 3/8-24 THD SIZE, 3 IN. LG 181385 (72582)	EA	32				•	•	•	•	•	68	1
PAHZZ	5310-637-9541	WASHER, LOCK: BALANCE WEIGHT COVER, 3/8 IN. SCREW SIZE MS35338-46 (96906)	EA	52				•	•	•	•	•	68	2
PAHZZ	5310-080-6004	WASHER, FLAT: BALANCE WEIGHT COVER, 3/8 IN. SCREW SIZE MS27183-14 (96906)	EA	30				•	•	•	•	•	68	3
PAHZZ	5305-269-2807	SCREW, CAP, HEXAGON HEAD: BALANCE WEIGHT COVER, 3/8-24 THD SIZE, 1 1/2 IN. LG MS90726-64 (96906)	EA	8				•	•	•	•	•	68	4
C PAHZZ	5305-269-3222	SCREW, CAP, HEXAGON HEAD: BALANCE WEIGHT COVER, 3/8-16 THD SIZE, 3 1/2 IN. LG MS90725-72 (96906)	EA	8				•	•	•	•	•	68	5

(1) SMR CODE	(2) FEDERAL STOCK NUMBER	(3) DESCRIPTION REF NUMBER & MFR CODE	USABLE ON CODE	(4) UNIT OF MEAS	(5) QTY INC IN UNIT	(6) 30-DAY DS MAINT ALLOWANCE (a) 1-20	(b) 21-50	(c) 51-100	(7) 30-DAY GS MAINT ALLOWANCE (a) 1-20	(b) 21-50	(c) 51-100	(8) 1-YR ALW PER 100 EQUIP CNTGY	(9) DEPOT MAINT ALW PER 100 EQUIP	(10) ILLUSTRATION (a) FIG. NO.	(b) ITEM NO.
PAHZZ	5310-637-9541	WASHER, LOCK: BALANCE WEIGHT COVER, 3/8 IN. SCREW SIZE MS35338-46 (96906)		EA	8				•	•	•	•	•	68	6
C PAHZZ	5306-269-2798	BOLT, MACHINE: BALANCE WEIGHT COVER, 3/8-24 THD SIZE, 1/2 IN. LG MS90726-55 (96906)		EA	4				•	•	•	•	•	68	7
C PAHZZ	5306-013-7902	BOLT, MACHINE: BALANCE WEIGHT COVER, 3/8-24 THD SIZE, 4 IN. LG 186312 (72582)		EA	4				•	•	•	•	•	68	8
C PAHZZ	5305-018-0129	SCREW, CAP, HEXAGON HEAD: BALANCE WEIGHT COVER, 3/8-16 THD SIZE, 7/8 IN. LG 180129 (72582)		EA	8				•	•	•	•	•	68	9
C XDHZZ		COVER, BALANCE WEIGHT 5159440 (72582)		EA	4									68	10
KFFZZ		GASKET: BALANCE WEIGHT COVER 5121753 (72582) (PART OF SET, FSN 5330-379-4301)		EA	4									68	11
C PAHZZ	5305-206-6776	SCREW, CAP, HEXAGON HEAD: GEAR RETAINING PLATE, 3/8-24 THD SIZE, 1 IN. LG FF585TYPE2STYLE10PGRADE8 (81348)		EA	32				•	•	•	•	•	68	12
PAHZZ	5310-637-9541	WASHER, LOCK: GEAR RETAINING PLATE, 3/8 IN. SCREW SIZE MS35338-46 (96906)		EA	16				•	•	•	•	•	68	13
R XDHZZ		PLATE, SHAFT, GEAR NUT 5172734 (72582)		EA	8									68	14
PAHZZ	5310-274-4658	NUT, PLAIN, HEXAGON: BALANCE WEIGHT 5150087 (72582)		EA	4				•	•	•	•	•	68	15
PAHZZ	5310-209-1543	WASHER, LOCK: BALANCE WEIGHT 5177769 (72582)		EA	4				•	•	•	•	•	68	16
PAHZZ	5305-269-2805	SCREW, CAP, HEXAGON HEAD: REAR BALANCE WEIGHT, 3/8-24 THD SIZE, 1 1/4 IN. LG MS90726-62 (96906)		EA	16				•	•	•	•	•	68	17
C XDHZZ		WEIGHT, BALANCE: REAR 5121970 (72582)		EA	16									68	18
PAHZZ	2815-083-8021	GEAR, HELICAL, LEFT HAND HELIX: CAMSHAFT AND BALANCE SHAFT 5121816 (72582)		EA	4				•	•	•	•	•	68	19
PAHZZ	2815-745-7738	GEAR, HELICAL, RIGHT HAND HELIX: CAMSHAFT AND BALANCE SHAFT 5121815 (72582)		EA	4				•	•	•	•	•	68	19
PAHZZ	5305-068-0511	SCREW, CAP, HEXAGON HEAD: CAMSHAFT BEARING, 3/8-16 THD SIZE, 1 1/4 IN. LG MS90728-62 (96906)		EA	24				•	•	•	•	•	68	20
PAHZZ	5310-637-9541	WASHER, LOCK: CAMSHAFT BEARING, 3/8 IN. SCREW SIZE MS35338-46 (96906)		EA	24				•	•	•	•	•	68	21
PAHZZ	2815-589-9414	BEARING ASSEMBLY, CAMSHAFT 5111422 (72582)		EA	8				•	•	•	•	•	68	22
PAHZZ	3120-585-3282	WASHER, THRUST: CAM AND BALANCE SHAFT END 5111424 (72582)		EA	8				•	•	•	•	•	68	23
PAHZZ	5310-274-4658	NUT, PLAIN, HEXAGON: BALANCE WEIGHT 5150087 (72582)		EA	4				•	•	•	•	•	68	24
PAHZZ	5310-209-1543	WASHER, LOCK: BALANCE WEIGHT 5177769 (72582)		EA	4				•	•	•	•	•	68	25

(1) SMR CODE	(2) FEDERAL STOCK NUMBER	(3) DESCRIPTION REF NUMBER & MFR CODE USABLE ON CODE	(4) UNIT OF MEAS	(5) QTY INC IN UNIT	(6) 30-DAY DS MAINT ALLOWANCE (a) 1-20	(b) 21-50	(c) 51-100	(7) 30-DAY GS MAINT ALLOWANCE (a) 1-20	(b) 21-50	(c) 51-100	(8) 1-YR ALW PER 100 EQUIP CNTGY	(9) DEPOT MAINT ALW PER 100 EQUIP	(10) ILLUSTRATION (a) FIG. NO.	(b) ITEM NO.
XDHZZ		WEIGHT ASSEMBLY, FRONT BALANCE 5114031 (72582)	EA	8									68	26
PAHZZ	5305-068-0511	SCREW, CAP, HEXAGON HEAD: CAMSHAFT BEARING, 3/8-16 THD SIZE, 1 1/4 IN. LG MS90728-62 (96906)	EA	24				•	•	•	•	•	68	27
PAHZZ	5310-637-9541	WASHER, LOCK: CAMSHAFT BEARING, 3/8 IN. SCREW SIZE MS35338-46 (96906)	EA	24				•	•	•	•	•	68	28
PAHZZ	2815-589-9414	BEARING ASSEMBLY, CAMSHAFT 5111422 (72582)	EA	8				•	•	•	•	•	68	29
XAHZZ		BUSHING, CAM AND BALANCER, SHAFT END 5111423 (72582)	EA	32									68	30
PAHZZ	3120-585-3282	WASHER, THRUST: CAM AND BALANCE SHAFT END 5111424 (72582)	EA	8				•	•	•	•	•	68	31
PAHZZ	2815-476-3872	CAMSHAFT ASSEMBLY: RB, RD ENGINE STARBOARD 5122486 (72582) (INCLUDES SAME COMPONENT AS CAMSHAFT, FSN 2815-363-6047)	EA	2				•	•	•	•	•	68	32
PAHZZ	2815-363-6047	CAMSHAFT ASSEMBLY: LB, LD ENGINE PORT 5179962 (72582)	EA	2				•	•	•	•	•	68	32
XDHZZ		PIN, STRAIGHT HEADLESS: CAMSHAFT 5151277 (72582)	EA	2									68	33
PAHZZ	5305-264-5925	SETSCREW: INTERMEDIATE BEARING LOCK 5123383 (72582)	EA	20				•	•	•	•	•	68	34
PAHZZ	3120-818-1856	BEARING ASSEMBLY: CAMSHAFT INTERMEDIATE 5196022 (72582)	EA	20				•	•	•	•	•	68	35
XAHZZ		RING, RETAINING: INTERMEDIATE BEARING 5115572 (72582)	EA	40									68	36
PAHZZ	5315-252-5969	KEY, WOODRUFF: BALANCE WEIGHT 5153914 (72582)	EA	16				•	•	•	•	•	68	37
PAHZZ	2815-364-3080	SHAFT ASSEMBLY: BALANCER 5158673 (72582)	EA	4				•	•	•	•	•	68	38
		GROUP 49 - IDLER GEARS AND BEARINGS												
PAHZZ	5305-071-2073	SCREW, CAP, HEXAGON HEAD: IDLER GEAR, HUB AND SPACER, 1/2-13 THD SIZE, 2 1/2 IN. LG MS90728-117 (96906)	EA	5				•	•	•	•	•	69	1
PAHZZ	5310-515-9627	WASHER, FLAT: IDLER GEAR, HUB AND SPACER 50-4-18-17-7 (38597)	EA	5				•	•	•	•	•	69	2
PAHZZ	5306-514-9734	BOLT, HEXAGON HEAD: IDLER GEAR, BEARING RETAINER, 5/16-24 THD SIZE, 1/2 IN. LG 446072 (72582)	EA	24				•	•	•	•	•	69	3
PAHZZ	2815-470-0939	LOCKING PLATE, NUT AND BOLT 5176999 (72582)	EA	12				•	•	•	•	•	69	4
XDHZZ		RETAINER, IDLER GEAR, BEARING 5176998 (72582)	EA	4									69	5
PAHZZ	2815-349-7882	GEAR ASSEMBLY, LEFT HAND HELIX: RB AND RD ENGINE 5197560 (72582) (INCLUDES SAME COMPONENTS AS GEAR ASSEMBLY, FSN 2815-066-6075, EXCEPT WHERE ANNOTATED)	EA	4				•	•	•	•	•	69	6

(1) SMR CODE	(2) FEDERAL STOCK NUMBER	(3) DESCRIPTION REF NUMBER & MFR CODE / USABLE ON CODE	(4) UNIT OF MEAS	(5) QTY INC IN UNIT	(6) 30-DAY DS MAINT ALLOWANCE (a) 1-20	(b) 21-50	(c) 51-100	(7) 30-DAY GS MAINT ALLOWANCE (a) 1-20	(b) 21-50	(c) 51-100	(8) 1-YR ALW PER 100 EQUIP CNTGY	(9) DEPOT MAINT ALW PER 100 EQUIP	(10) ILLUSTRATION (a) FIG. NO.	(b) ITEM NO.
PAHZZ	2815-066-6075	GEAR ASSEMBLY, IDLER, RIGHT HAND HELIX: LB AND LD ENGINE 5197561 (72582)	EA	4				•	•	•	•	•	69	6
XAHZZ		GEAR, HELICAL, IDLER: RB, RD ENGINE 5113817 (72582) (USED ON GEAR, FSN 2815-349-7882, ONLY)	EA	4									69	7
XAHZZ		GEAR, HELICAL IDLER, RIGHT HAND: LB, LD, ENGINE 5113818 (72582) (USED ON GEAR ASSEMBLY, FSN 2815-066-6075, ONLY)	EA	4									67	7
XAHZZ		BEARING, ROLLER, TAPERED 7451142 (72582)	EA	4									69	8
XAHZZ		HUB ASSEMBLY: IDLER 5130135 (72582)	EA	4									69	9
XAHZZ		PIN, HOLLOW 5151444 (72582)	EA	4									69	10
PAHZZ	5305-071-2073	SCREW, CAP, HEXAGON HEAD: IDLER GEAR SPACER, 1/2-13 THD SIZE, 2 1/2 IN. LG MS90728-117 (96906)	EA	3				•	•	•	•	•	69	11
PAHZZ	5310-515-9627	WASHER, FLAT: IDLER GEAR SPACER 50-4-18-17-7 (38597)	EA	3				•	•	•	•	•	69	12
XDHZZ		SPACER ASSEMBLY: IDLER GEAR HOLE 5131719 (72582)	EA	4									69	13
XDHZZ		PIN, HOLLOW: IDLER SPACER 5151444 (72582)	EA	4									69	14
		GROUP 50 - ENGINE LIFTING BRACKETS												
PAFZZ	5305-050-1076	SCREW, CAP, HEXAGON HEAD: REAR ENGINE LIFTING BRACKET MTG, 7/16-14 THD SIZE, 1 1/2 IN. LG MS90725-89 (96906)	EA	8	•	•	•	•	•	•	•	•	70	1
PAFZZ	5310-209-0965	WASHER, LOCK: REAR ENGINE, LIFTING BRACKET MTG SCREW, 7/16 IN. MS35338-47 (96906)	EA	8	•	•	•	•	•	•	•	•	70	2
XDFZZ		BRACKET, LIFTER, ENGINE, REAR 5150050 (72582)	EA	4									70	3
KFFZZ		GASKET: ENGINE LIFTER BRACKET 5150052 (72582) (PART OF KIT, FSN 5330-363-7892)	EA	4									70	4
PAFZZ	5306-206-2668	EYE BOLT, ENGINE LIFTER BRACKET 5151476 (72582)	EA	8	•	•	•	•	•	•	•	•	70	5
PAFZZ	5310-834-8732	NUT, PLAIN, HEXAGON: EYE BOLT, LOCKING, 1/2-13 THD SIZE MS35691-33 (96906)	EA	8	•	•	•	•	•	•	•	•	70	6
PAFZZ	5305-071-2069	SCREW, CAP, HEXAGON HEAD: VENT TO EXPANSION TANK, 1/2-13 THD SIZE, 1 1/2 IN. LG MS90728-113 (96906)	EA	8	•	•	•	•	•	•	•	•	70	7
PAFZZ	5310-584-5272	WASHER, LOCK: VENT TO EXPANSION TANK MTG SCREW, 1/2 IN. SCREW SIZE MS35338-48 (96906)	EA	8	•	•	•	•	•	•	•	•	70	8
PAFZZ	5305-050-1076	SCREW, CAP, HEXAGON HEAD: VENT MTG, 7/16-14 THD SIZE, 1 1/2 IN. LG MS90725-89 (96906)	EA	8	•	•	•	•	•	•	•	•	70	9

(1) SMR CODE	(2) FEDERAL STOCK NUMBER	(3) DESCRIPTION REF NUMBER & MFR CODE	USABLE ON CODE	(4) UNIT OF MEAS	(5) QTY INC IN UNIT	(6) 30-DAY DS MAINT ALLOWANCE (a) 1-20	(b) 21-50	(c) 51-100	(7) 30-DAY GS MAINT ALLOWANCE (a) 1-20	(b) 21-50	(c) 51-100	(8) 1-YR ALW PER 100 EQUIP CNTGY	(9) DEPOT MAINT ALW PER 100 EQUIP	(10) ILLUSTRATION (a) FIG. NO.	(b) ITEM NO.
PAFZZ	5310-209-0965	WASHER, LOCK: VENT MTG SCREW, 7/16 IN. SCREW SIZE MS35338-47 (96906)		EA	8	•	•	•	•	•	•	•	•	70	10
XDFZZ		ENGINE LIFTER BRACKET, FRONT 5167776 (72582)		EA	1									70	11
KFFZZ		GASKET: ENGINE LIFTER BRACKET 5150052 (72582) (PART OF KIT, FSN 5330-363-7892)		EA	1									70	12
		GROUP 51 - OIL PAN													
PACZZ	4730-289-5176	PLUG, PIPE: OIL DRAIN MS49005-8 (96906)		EA	1	•	•	•	•	•	•	•	•	71	1
PAOZZ	4730-253-4414	ELBOW: OIL PAN DRAIN TUBE, 1/2-14 THD SIZE, 90 DEG, STREET MS39230-4 (96906)		EA	1	•	•	•	•	•	•	•	•	71	2
HDOZZ	4720-494-1750	HOSE: FLEXIBLE, OIL DRAIN 5122206 (72582) MANUFACTURE FROM:	AB	EA	1									71	3
PCOZZ		HOSE, AS REQUIRED 1528 (01276)		FT		•	•	•	•	•	•			71	
PCOZZ		HOSE, FLEXIBLE: OIL PAN DRAIN 5144531 (72582)	C	EA	1	•	•	•	•	•	•	•	•	71	3
PAOZZ	4730-253-4413	ELBOW: OIL PAN DRAIN TUBE, 3/8-18 THD SIZE, 90 DEG, STREET MS39230-3 (96906)		EA	1	•	•	•	•	•	•	•	•	71	4
PAFZZ	5306-325-1959	BOLT: OIL PAN SUMP 5172052 (72582)		EA	32	•	•	•	•	•	•	•	•	71	5
PAFZZ	5310-407-9566	WASHER, LOCK: OIL SUMP AND OIL PAN, 5/16 IN. SCREW SIZE MS35338-45 (96906)		EA	24	•	•	•	•	•	•	•	•	71	6
XBFZZ		SUMP, OIL PAN 5115157 (72582)		EA	2									71	7
PCFZZ	2815-447-3167	GASKET: OIL PAN SUMP 5153986 (72582)		EA	2	•	•	•	•	•	•	•	•	71	8
PAQZZ	5306-018-9691	BOLT, MACHINE: OIL PAN MTG, 5/16-18 THD SIZE, 3/4 IN. LG 189691 (72582)		EA	68	•	•	•	•	•	•	•	•	71	9
PAFZZ	5310-407-0566	WASHER, LOCK: OIL PAN MTG SCREW MS35338-45 (96906)		EA	24	•	•	•	•	•	•	•	•	71	10
XBFZZ		PAN, OIL: ENGINE, RH 5126850 (72582)		EA	1									71	11
XDFZZ		PAN, OIL: ENGINE, LH 5126851 (72582)		EA	1									71	11
KFFZZ		GASKET: OIL PAN TO BLOCK 5150117 (72582) (PART OF SET, FSN 5330-379-4301, AND KIT, FSN 2815-363-8153)		EA	2									71	12
PAOZZ	4730-542-2886	FITTING: OIL PAN DRAIN 4738-6-8B (01276)	AB	EA	4	•	•	•	•	•	•	•	•		
PAOZZ	4730-193-0871	BUSHING: OIL PAN DRAIN WVP471 (81348)		EA	2	•	•	•	•	•	•	•	•		
PAOZZ	4730-202-6663	BUSHING: OIL PAN DRAIN WVP471TYPE2 (81348)		EA	2	•	•	•	•	•	•	•	•		
PAOZZ	4730-273-6057	COUPLING: OIL PAN DRAIN WVP521TY1 (81348)		EA	2	•	•	•	•	•	•	•	•		
PACZZ	4730-011-2304	PLUG: OIL TUBE DRAIN WVP471 (81348)		EA	2	•	•	•	•	•	•	•	•		

(1) SMR CODE	(2) FEDERAL STOCK NUMBER	(3) DESCRIPTION REF NUMBER & MFR CODE USABLE ON CODE	(4) UNIT OF MEAS	(5) QTY INC IN UNIT	(6) 30-DAY DS MAINT ALLOWANCE (a) 1-20	(b) 21-50	(c) 51-100	(7) 30-DAY GS MAINT ALLOWANCE (a) 1-20	(b) 21-50	(c) 51-100	(8) 1-YR ALW PER 100 EQUIP CNTGY	(9) DEPOT MAINT ALW PER 100 EQUIP	(10) ILLUSTRATION (a) FIG. NO.	(b) ITEM NO.
PAOZZ	5340-282-7509	CLAMP, LOOP: OIL DRAIN TUBE MS21333-62 (96906)	EA	2	•	•	•	•	•	•	•	•		
XDOZZ		BRACKET: OIL DRAIN TUBE 5173022 (72582)	EA	2										
PAOZZ	5305-206-6776	SCREW, CAP, HEXAGON HEAD: BRACKET MTG FF585TY2STYLE10PGA8 (81348)	EA	2	•	•	•	•	•	•	•	•		
PAOZZ	5310-732-0559	NUT, PLAIN, HEXAGON: BRACKET MTG MS51968-8 (96906)	EA	2	•	•	•	•	•	•	•	•		
PAOZZ	5310-637-9541	WASHER, LOCK: BRACKET MTG, 3/8 IN. SCREW SIZE MS35338-46 (96906)	EA	2	•	•	•	•	•	•	•	•		
		GROUP 52 - OIL PUMP ASSEMBLY												
PAFZZ	5306-226-4826	BOLT, MACHINE: OIL PUMP INLET, PIPE TO PUMP, 5/16-18 THD SIZE, 7/8 IN. LG MS90728-33 (96906)	EA	8	•	•	•	•	•	•	•	•	72	1
PAFZZ	5310-407-9566	WASHER, LOCK: OIL PUMP, INLET PIPE TO PUMP, 5/16 IN. SCREW SIZE MS35338-45 (96906)	EA	8	•	•	•	•	•	•	•	•	72	2
KFFZZ		GASKET: OIL PUMP, INLET 5153627 (72582) (PART OF SET, FSN 5330-379-4301, KIT, FSN 2815-363-8153, AND KIT, FSN 2815-629-6095)	EA	4									72	3
XDFZZ		PIPE, INLET, OIL PUMP 5174581 (72582)	EA	4									72	4
PAFZZ	5305-269-2801	SCREW, CAP, HEXAGON HEAD: BRACKET MTG MS90726-58 (96906)	EA	8	•	•	•	•	•	•	•	•	72	5
PAFZZ	5310-637-9541	WASHER, LOCK: BRACKET MTG, 3/8 IN. SCREW SIZE MS35338-46 (96906)	EA	8	•	•	•	•	•	•	•	•	72	6
XDFZZ		CLIP, SPRING TENSION: OIL SCREEN 5153284 (72582)	EA	4									72	7
XDFZZ		SCREEN OIL PUMP, INLET 5153286 (72582)	EA	4									72	8
PAFZZ	5310-880-7746	NUT, PLAIN, HEXAGON: SCREEN HOUSING, 5/16-24 THD SIZE 121917 (72582)	EA	8	•	•	•	•	•	•	•	•	72	9
PAFZZ	5310-407-9566	WASHER, LOCK: SCREEN HOUSING, 5/16 IN. SCREW SIZE MS35338-45 (96906)	EA	8	•	•	•	•	•	•	•	•	72	10
PAFZZ	5310-081-4219	WASHER, FLAT: SCREEN HOUSING, 5/16 IN. SCREW SIZE 120393 (72582)	EA	8	•	•	•	•	•	•	•	•	72	11
XDFZZ		HOUSING, SCREEN 5118302 (72582)	EA	4									72	12
PAFZZ	5306-424-4052	BOLT, MACHINE: SCREEN HOUSING, 5/16-24 THD SIZE, 1 1/8 IN. LG 9417889 (72582)	EA	8	•	•	•	•	•	•	•	•	72	13
XDFZZ		BRACKET ASSEMBLY, OIL PUMP SCREEN 5173139 (72582)	EA	8									72	14
PAFZZ	5306-225-8500	BOLT, MACHINE: OIL PIPE MTG, 5/16-18 THD SIZE, 1 1/8 IN. LG MS90725-35 (96906)	EA	4	•	•	•	•	•	•	•	•	72	15

(1) SMR CODE	(2) FEDERAL STOCK NUMBER	(3) DESCRIPTION REF NUMBER & MFR CODE	USABLE ON CODE	(4) UNIT OF MEAS	(5) QTY INC IN UNIT	(6) 30-DAY DS MAINT ALLOWANCE (a) 1-20	(b) 21-50	(c) 51-100	(7) 30-DAY GS MAINT ALLOWANCE (a) 1-20	(b) 21-50	(c) 51-100	(8) 1-YR ALW PER 100 EQUIP CNTGY	(9) DEPOT MAINT ALW PER 100 EQUIP	(10) ILLUSTRATION (a) FIG. NO.	(b) ITEM NO.
PAFZZ	5310-407-9566	WASHER, LOCK: OIL PIPE MTG, 5/16 IN. SCREW SIZE MS35338-45 (96906)		EA	8	•	•	•	•	•	•	•	•	72	16
PAFZZ	5306-226-4826	BOLT, MACHINE: OIL PIPE MTG, 5/16-18 THD SIZE, 7/8 IN. LG MS90728-33 (96906)		EA	4	•	•	•	•	•	•	•	•	72	17
PAFZZ	5310-407-9566	WASHER, LOCK: OIL PIPE MTG, 5/16 IN. SCREW SIZE MS35338-45 (96906)		EA	4	•	•	•	•	•	•	•	•	72	18
XDFZZ		PIPE ASSEMBLY: OIL, RD ENGINE 5159388 (72582)		EA	1									72	19
XDFZZ		PIPE ASSEMBLY: OIL, LB ENGINE 5159387 (72582)		EA	1									72	19
XDFZZ		PIPE, OUTLET, OIL PUMP: RB, LD ENGINE 5110126 (72582)		EA	2									72	19
KFFZZ		GASKET, OIL PUMP OUTLET PIPE 5153313 (72582) (PART OF SET, FSN 5330-379-4301, KIT, FSN 2815-363-8153 AND KIT, FSN 2815-639-6095)		EA	4									72	20
KFFZZ		GASKET: OIL PUMP, PAD COVER 5151370 (72582) (PART OF SET, FSN 5330-379-4301, KIT, FSN 2815-363-8153 AND KIT, FSN 2815-629-6095)		EA	8									72	21
PAFZZ	5305-225-8500	SCREW, CAP, HEXAGON HEAD: OIL PRESSURE REGULATOR, 5/16-18 THD SIZE, 1 1/8 IN. LG MS90725-35 (96906)		EA	8	•	•	•	•	•	•	•	•	72	22
PAFZZ	5310-407-9566	WASHER, LOCK: OIL PRESSURE REGULATOR, 5/16 IN. SCREW SIZE MS35338-45 (96906)		EA	8	•	•	•	•	•	•	•	•	72	23
KFFZZ		GASKET: OIL REGULATOR TO BLOCK 5154199 (72582) (PART OF SET, FSN 5330-379-4301 AND KIT, FSN 2815-363-8153)		EA	4									72	24
PAFZZ	2815-363-8167	REGULATOR, OIL PRESSURE ASSEMBLY: D ENGINE 5159384 (72582) (COMPONENTS SAME AS REGULATOR, FSN 2815-363-8168, EXCEPT WHERE INDIVIDUAL COMPONENTS ARE ANNOTATED)		EA	2	•	•	•	•	•	•	•	•	72	25
PAFZZ	2815-363-8168	REGULATOR, OIL PRESSURE ASSEMBLY: B ENGINE 5159383 (72582)		EA	2	•	•	•	•	•	•	•	•	72	25
XDFZZ		PLUG, MACHINE: THREAD, OIL PRESSURE 5156816 (72582)		EA	4									72	26
XAFZZ		SPRING, HELICAL, COMPRESSION: OIL PRESSURE REGULATOR 5156815 (72582)		EA	4									72	27
XAFZZ		PLUNGER, RELIEF VALVE REGULATOR 5156819 (72582)		EA	4									72	28
XAFZZ		BODY REGULATOR, OIL, D ENGINE 5159382 (72582) (USED ON REGULATOR, FSN 2815-363-8167, ONLY)		EA	2									72	29
XAFZZ		BODY REGULATOR, OIL, B ENGINE 5159381 (72582) (USED ON REGULATOR, FSN 2815-363-8168, ONLY)		EA	2									72	29

(1) SMR CODE	(2) FEDERAL STOCK NUMBER	(3) DESCRIPTION REF NUMBER & MFR CODE	USABLE ON CODE	(4) UNIT OF MEAS	(5) QTY INC IN UNIT	(6) 30-DAY DS MAINT ALLOWANCE (a) 1-20	(b) 21-50	(c) 51-100	(7) 30-DAY GS MAINT ALLOWANCE (a) 1-20	(b) 21-50	(c) 51-100	(8) 1-YR ALW PER 100 EQUIP CNTGY	(9) DEPOT MAINT ALW PER 100 EQUIP	(10) ILLUSTRATION (a) FIG. NO.	(b) ITEM NO.
PAFZZ	5305-206-6776	SCREW, CAP, HEXAGON HEAD: PUMP MTG, 3/8-24 THD SIZE, 1 IN. LG FFS85TY2STYLE10PGRADE8 (81348)		EA	16	•	•	•	•	•	•	•	•	72	30
PAFZZ	5310-637-9541	WASHER, LOCK: PUMP MTG, 3/8 IN. SCREW SIZE MS35338-46 (96906)		EA	16	•	•	•	•	•	•	•	•	72	31
XDFZZ		SHIM: .005 IN. THK PUMP MTG 5176119 (72582)		EA	V									72	32
PAFMH	4320-379-4287	PUMP ASSEMBLY: OIL, RB, RD, ENGINE 5175984 (72582) (INCLUDES SAME COMPONENTS AS PUMP, FSN 2815-379-4286 EXCEPT WHERE INDIVIDUAL COMPONENTS ARE ANNOTATED)		EA	2	•	•	•	•	•	•	•	•	72	
PAFMH	2815-379-4286	PUMP ASSEMBLY: OIL, LB, LD, ENGINE 5175983 (72582)		EA	2	•	•	•	•	•	•	•	•	72	
PAHZZ	5306-226-4829	BOLT, MACHINE: COVER MTG, 5/16-18 THD SIZE, 1 1/4 IN. LG MS90728-36 (96906)		EA	16				•	•	•	•	•	72	33
PAHZZ	5310-407-9566	WASHER, LOCK: COVER MTG, 5/16 IN. SCREW SIZE MS35338-45 (96906)		EA	16				•	•	•	•	•	72	34
XAHZZ		COVER, OIL PUMP, LB, LD 5154251 (72582) (INCLUDES SAME COMPONENTS AS COVER, P/N 5154252 (72582)) (USED ON PUMP, FSN 2815-379-4286, ONLY)		EA	2									72	35
XAHZZ		COVER ASSEMBLY, OIL PUMP, RB, RD 5154252 (72582) (USED ON PUMP, FSN 4320-379-4287, ONLY)		EA	2									72	35
KFHZZ		BEARING, SLEEVE: OIL PUMP GEAR 5153154 (72582) (PART OF KIT, FSN 2815-629-6095)		EA	8									72	36
KFHZZ		GEAR, SPUR, OIL PUMP DRIVE 5156528 (72582) (PART OF KIT, FSN 2815-629-6095)		EA	4									72	37
KFHZZ		GEAR, HELICAL: OIL PUMP DRIVEN 5153617 (72582) (PART OF KIT, FSN 2815-629-6095)		EA	4									72	38
KFHZZ		BEARING, SLEEVE: OIL PUMP COVER 5153154 (72582) (PART OF KIT, FSN 2815-629-6095)		EA	2									72	39
KFHZZ		SHAFT: OIL PUMP, DRIVEN, GEAR 5153310 (72582) (PART OF KIT, FSN 2815-629-6095)		EA	4									72	40
PAHZZ	5306-226-4826	BOLT, MACHINE: IDLER GEAR MTG, 5/16-18 THD SIZE, 7/8 IN. LG MS90728-33 (96906)		EA	4				•	•	•	•	•	72	41
PAHZZ	5310-595-7630	WASHER, SMALL, IDLER GEAR 5175944 (72582)		EA	4				•	•	•	•	•	72	42
PAHZZ	5310-308-7420	WASHER, LARGE, IDLER GEAR 5169197 (72582)		EA	1				•	•	•	•	•	72	43
PAHZZ	5315-044-3230	PIN, GROOVED, HEADLESS: IDLER GEAR, 1/8 IN. DIA, 3/8 IN. LG 443230 (72582)		EA	4				•	•	•	•	•	72	44
PAHZZ	3020-272-6164	GEAR, SPUR ASSEMBLY: IDLER W/BUSHING 5156683 (72582)		EA	4				•	•	•	•	•	72	45

(1) SMR CODE	(2) FEDERAL STOCK NUMBER	(3) DESCRIPTION REF NUMBER & MFR CODE / USABLE ON CODE	(4) UNIT OF MEAS	(5) QTY INC IN UNIT	(6) 30-DAY DS MAINT ALLOWANCE (a) 1-20	(b) 21-50	(c) 51-100	(7) 30-DAY GS MAINT ALLOWANCE (a) 1-20	(b) 21-50	(c) 51-100	(8) 1-YR ALW PER 100 EQUIP CNTGY	(9) DEPOT MAINT ALW PER 100 EQUIP	(10) ILLUSTRATION (a) FIG. NO.	(b) ITEM NO.
PAMZZ	3120-661-8673	BEARING, SLEEVE, IDLER GEAR 5156521 (72582)	EA	4				•	•	•	•	•	72	46
KFMZZ		GEAR, HELICAL, PUMP DRIVE 5153260 (72582) (PART OF KIT, FSN 2815-629-6095)	EA	4									72	47
PAMZZ	5306-940-9079	BOLT, SELF-LOCK: SUPPORT IDLER GEAR MTG, 3/8-16 THD SIZE, 7/8 IN. LG 9409079 (72582)	EA	4				•	•	•	•	•	72	48
XBMZZ		SUPPORT, OIL PUMP, IDLER GEAR 5169195 (72582)	EA	4									72	49
PAMZZ	5315-246-9037	PIN, STRAIGHT, HEADLESS: IDLER GEAR SUPPORT 5176035 (72582)	EA	4				•	•	•	•	•	72	50
KFMZZ		KEY, WOODRUFF: DRIVE GEAR, 1/8 X 5/8 IN. 103905 (72582) (PART OF KIT, FSN 2815-629-6095)	EA	8									72	51
KFMZZ	2815-119-2781	SHAFT, SHOULDER, OIL PUMP DRIVE 5153309 (72582) (PART OF KIT, FSN 2815-629-6095)	EA	4									72	52
PAMZZ	5306-155-4794	BOLT, MACHINE: ACCESS COVER PLATE MTG, 5/16-18 THD SIZE, 3/4 IN. LG 179816 (72582)	EA	8				•	•	•	•	•	72	53
PAMZZ	5310-407-9566	WASHER, LOCK: ACCESS COVER PLATE, 5/16 IN. SCREW SIZE MS35338-45 (96906)	EA	8				•	•	•	•	•	72	54
XBMZZ		COVER PLATE, ACCESS 5156955 (72582)	EA	4									72	55
KFMZZ		GASKET: OIL PUMP SCREEN COVER 5167380 (72582) (PART OF SET, FSN 5330-379-4301, KIT, FSN 2815-363-8153 AND KIT, FSN 2815-629-6095)	EA	4									72	56
PAMZZ	5365-242-3223	PLUG, MACHINE: RELIEF VALVE 5152613 (72582)	EA	8				•	•	•	•	•	72	57
KFMZZ		GASKET: OIL PUMP RELIEF PLUG MS35769-18 (96906) (PART OF SET, FSN 5330-379-4301, KIT, FSN 2815-363-8153, AND KIT, FSN 2815-629-6095)	EA	8									72	58
KFMZZ		SPRING, HELICAL, RELIEF VALVE 5155765 (72582)	EA	4									72	59
PAMZZ	2815-127-3055	VALVE, RELIEF, OIL PUMP 5153247 (72582)	EA	4				•	•	•	•	•	72	60
XAMZZ		BODY ASSEMBLY, OIL PUMP 5169193 (72582)	EA	4									72	61
KFMZZ		BEARING, SLEEVE, BODY ASSEMBLY 5153147 (72582) (PART OF KIT, FSN 2815-629-6095)	EA	8									72	62
PAFZZ	2815-363-8153	GASKET KIT, OIL PUMP 5192108 (72582)	EA	4	•	•	•	•	•	•	•	•	71	
		4-GASKET											71	11
		4-GASKET											72	3
		8-GASKET											72	20
		8-GASKET											72	21
		4-GASKET											72	24
		4-GASKET											72	56

(1) SMR CODE	(2) FEDERAL STOCK NUMBER	(3) DESCRIPTION REF NUMBER & MFR CODE	USABLE ON CODE	(4) UNIT OF MEAS	(5) QTY INC IN UNIT	(6) 30-DAY DS MAINT ALLOWANCE (a) 1-20	(b) 21-50	(c) 51-100	(7) 30-DAY GS MAINT ALLOWANCE (a) 1-20	(b) 21-50	(c) 51-100	(8) 1-YR ALW PER 100 EQUIP CNTGY	(9) DEPOT MAINT ALW PER 100 EQUIP	(10) ILLUSTRATION (a) FIG. NO.	(b) ITEM NO.
		3-GASKET												72	58
PAMZZ	2815-629-6095	OVERHAUL KIT, OIL PUMP 5194801 (72582)		EA	4				*	*	*	*	*	72	
		2-GASKET												72	3
		8-GASKET												72	10
		4-BEARING												72	36
		4-GEAR												72	38
		4-SHAFT												72	40
		1-GEAR												72	47
		4-KEY												72	51
		4-SHAFT												72	52
		1-GASKET												72	56
		8-GASKET												72	58
		8-SPRING												72	59
		8-BEARING												72	62
		GROUP 53 - PISTON AND CONNECTING RODS													
PAMZZ	2815-324-0512	CYLINDER KIT 5194496 (72582)		EA	24				*	*	*	*	*	73	1
PAFZZ	2815-691-9701	PISTON ASSEMBLY 5189054 (72582)		EA	24	*	*	*	*	*	*	*	*	73	2
PAFZZ	2805-551-6146	DISC, SOLID PLATE, RETAINER PISTON PIN PISTON PIN 5188405 (72582)		EA	48	*	*	*	*	*	*	*	*	73	3
PAFZZ	3120-354-1224	BEARING, SLEEVE, PISTON PIN 5155839 (72582)		EA	48	*	*	*	*	*	*	*	*	73	4
PAFZZ	2815-028-6741	PIN, PISTON 5188406 (72582)		EA	24	*	*	*	*	*	*	*	*	73	5
PAFZZ	2815-288-0695	RING SET, PISTON 5193477 (72582)		EA	24	*	*	*	*	*	*	*	*	73	
KFFZZ		96-RING, PISTON COMPRESSION												73	6
KFFZZ		48-RING, PISTON OIL CONTROL												73	7
PAMZZ	2815-097-2476	CYLINDER SLEEVE 5188868 (72582)		EA	24				*	*	*	*	*	73	8
PAFZZ	2815-127-3058	CONNECTING ROD ASSEMBLY 5135515 (72582)		EA	24	*	*	*	*	*	*	*	*	73	9
R PAFZZ	3120-517-8329	BEARING, SLEEVE, CONNECTING ROD PIN 5157274 (72582)		EA	48	*	*	*	*	*	*	*	*	73	10
R PAFZZ	3120-662-8425	BEARING SET, ROD BEARING 5192895 (72582)		EA	24	*	*	*	*	*	*	*	*	73	
KFFZZ		24-BEARING, SHELL HALF: ROD LOWER												73	11
KFFZZ		24-BEARING, SHELL HALF: ROD UPPER												73	12
PAFZZ	5306-980-1542	BOLT, MACHINE: SPECIAL CONNECTING ROD 5135036 (72582)		EA	48	*	*	*	*	*	*	*	*	73	13
PAFZZ	5310-841-5700	NUT, PLAIN, HEXAGON: CONNECTING ROD 5117629 (72582)		EA	48	*	*	*	*	*	*	*	*	73	14
PAFZZ	3120-374-4882	ORIFICE, CONNECTING ROD 5154360 (72582)		EA	24	*	*	*	*	*	*	*	*	73	15

(1) Shift Code	(2) Federal Stock Number	(3) DESCRIPTION REF NUMBER & MFR CODE / USABLE ON CODE	(4) Unit of Meas	(5) Qty Inc in Unit	(6) 30-Day DS Maint Allowance (a) 1-20	(b) 21-50	(c) 51-100	(7) 30-Day GS Maint Allowance (a) 1-20	(b) 21-50	(c) 51-100	(8) 1-Yr Alw per 100 Equip Chtgy	(9) Depot Maint Alw per 100 Equip	(10) Illustration (a) Fig. No.	(b) Item No.
PAFZZ	2815-363-7300	NOZZLE, CONNECTING ROD SPRAY 5150140 (72582)	EA	24	•	•	•	•	•	•	•	•	73	16
		GROUP 54 - CRANKSHAFT												
R PAHZZ	5305-018-7069	SCREW, CAP, HEXAGON HEAD: CRANKSHAFT FRONT COVER MTG, 3/8-16 THD SIZE, 2 1/8 IN. LG 108608 (72582)	EA	8				•	•	•	•	•	74	1
PAHZZ	5310-637-9541	WASHER, LOCK: CRANKSHAFT, FRONT COVER AND TIMING GEAR MTG, 3/8 IN. SCREW SIZE MS35338-46 (96906)	EA	32				•	•	•	•	•	74	2
R PAHZZ	5306-432-8827	SCREW, CAP, HEXAGON HEAD: CRANKSHAFT, FRONT COVER MTG, 1/2-13 THD SIZE, 2 1/4 IN. LG 186631 (72582)	EA	16				•	•	•	•	•	74	3
PAHZZ	5310-584-5272	WASHER, LOCK: CRANKSHAFT, FRONT COVER MTG, 1/2 IN. SCREW SIZE MS35338-48 (96906)	EA	24				•	•	•	•	•	74	4
R XDHZZ		COVER ASSEMBLY: CRANKSHAFT 5182951 (72582)	EA	4									74	5
R PCHZZ	5330-154-8358	SEAL, CRANKSHAFT OIL, FRONT 5115454 (72582)	EA	4				•	•	•	•	•	74	6
PCHZZ	5330-303-1160	GASKET: CRANKSHAFT FRONT COVER 5169710 (72582)	EA	4				•	•	•	•	•	74	7
C XDHZZ		DEFLECTOR, OIL, CRANKSHAFT 5150174 (72582)	EA	4									74	8
PAHZZ	2815-363-8155	GEAR, BILGE PUMP, DRIVE 5156532 (72582)	EA	4				•	•	•	•	•	74	9
PAHZZ	5315-393-5865	KEY WOODRUFF: OIL PUMP, DRIVE GEAR 106751 (72582)	EA	4				•	•	•	•	•	74	10
KFHZZ		BEARING, HALF SLEEVE: CRANKSHAFT, LOWER 5179630 (72582) (PART OF SET, FSN 3120-622-8992)	EA	56									74	11
KFHZZ		BEARING, HALF SLEEVE: CRANKSHAFT UPPER 5179631 (72582) (PART OF SET, FSN 3120-622-8992)	EA	56									74	12
PAHZZ	2815-511-2336	WASHER, HALF THRUST: CRANKSHAFT 5159353 (72582)	EA	16				•	•	•	•	•	74	13
PCHZZ	2815-012-9521	SEAL, PLAIN ENCASED: CRANKSHAFT, REAR 5127821 (72582)	EA	4				•	•	•	•	•	74	14
PAHZZ	5306-174-1126	BOLT, MACHINE: TIMING GEAR TO CRANKSHAFT, 3/8-24 THD SIZE, 1 3/16 IN. LG 5150271 (72582)	EA	24				•	•	•	•	•	74	15
PAHZZ	2815-331-6790	GEAR, HELICAL, CRANKSHAFT, TIMING 5113814 (72582)	EA	2				•	•	•	•	•	74	16
PAHZZ	2815-076-6070	GEAR, HELICAL: CRANKSHAFT, TIMING 5113815 (72582)	EA	2				•	•	•	•	•	74	16
PAHDD	2815-354-1458	CRANKSHAFT ASSEMBLY, ENGINE 5179068 (72582)	EA	4				•	•	•	•	•	74	17
PAHZZ	5315-251-9986	PIN, STRAIGHT, HEADLESS: FLYWHEEL MTG 5177728 (72582)	EA	2				•	•	•	•	•	74	18
R PAHZZ	5365-152-0203	PLUG, PIPE: CRANKSHAFT, OIL HOLE, 1/8-27 THD SIZE 444687 (72582)	EA	24				•	•	•	•	•	74	19

(1) SMR CODE	(2) FEDERAL STOCK NUMBER	(3) DESCRIPTION REF NUMBER & MFR CODE / USABLE ON CODE	(4) UNIT OF MEAS	(5) QTY INC IN UNIT	(6) 20-DAY DS MAINT ALLOWANCE (a) 1-20	(b) 21-50	(c) 51-100	(7) 30-DAY GS MAINT ALLOWANCE (a) 1-20	(b) 21-50	(c) 51-100	(8) 1-YR ALW PER 100 EQUIP CNTGY	(9) DEPOT MAINT ALW PER 100 EQUIP	(10) ILLUSTRATION (a) FIG. NO.	(b) ITEM NO.
R PAHZZ	3120-662-8992	BEARING SET, CRANKSHAFT 5192874 (72582)	EA	56				•	•	•	•	•	74	
		56-BEARING											74	11
		56-BEARING											74	12
		GROUP 55 - CYLINDER BLOCK												
R XDHHH		BLOCK ASSEMBLY: DIESEL ENGINE 5195150 (72582)	EA	4									75	1
R PAFZZ	2815-152-6233	PLUG, PIPE: 1/8 IN. 5145009 (72582)	EA	14	•	•	•	•	•	•	•	•	75	2
R PAFZZ		PLUG, PIPE: 1/8 IN. 103877 (72582)	EA	4	•	•	•	•	•	•	•	•	75	3
PAFZZ	4730-044-4692	PLUG, PIPE: 1/4 IN., ALLEN HEAD 444692 (72582)	EA	12	•	•	•	•	•	•	•	•	75	4
C PAFZZ	4730-044-4867	PLUG, PIPE: 3/8 IN., HEXAGON SOCKET HEAD 5182580 (72582)	EA	4	•	•	•	•	•	•	•	•	75	5
PAFZZ	4730-604-7953	PLUG, PIPE: 1 IN. 5111798 (72582)	EA	40	•	•	•	•	•	•	•	•	75	6
R PAFZZ	5365-354-1454	PLUG, MACHINE: SPECIAL, 3/4-16 IN. 5178998 (72582)	EA	16	•	•	•	•	•	•	•	•	75	7
PAFZZ	5340-363-7977	PLUG, EXPANSION: CORE, CYLINDER BLOCK 5150014 (72582)	EA	8	•	•	•	•	•	•	•	•	75	8
PAFZZ	2805-735-0860	PLUG, CYLINDER BLOCK: PIPE, 3/8 IN. 5151122 (72582)	EA	8	•	•	•	•	•	•	•	•	75	9
PAFZZ	5340-237-8324	PLUG, EXPANSION: CYLINDER BLOCK 5150130 (72582)	EA	8	•	•	•	•	•	•	•	•	75	10
PAFZZ	4730-187-4241	PLUG, PIPE: 3/4 IN. 9409961 (72582)	EA	8	•	•	•	•	•	•	•	•	75	11
PAFZZ	4730-289-5176	PLUG, PIPE: HEXAGON SOCKET HEAD, 1/2 IN. MS49005-8 (96906)	EA	16	•	•	•	•	•	•	•	•	75	12
PAFZZ	4730-187-4207	PLUG, PIPE: 1/4 IN. 5145010 (72582)	EA	18	•	•	•	•	•	•	•	•	75	13
PAFZZ	5315-524-7660	PIN, STRAIGHT, HEADLESS 5151576 (72582)	EA	16	•	•	•	•	•	•	•	•	75	14
PCFZZ	2815-292-3161	GASKET: CYLINDER BLOCK 5178997 (72582)	EA	16	•	•	•	•	•	•	•	•	75	15
PAHZZ	5315-241-7484	PIN, STRAIGHT, HEADLESS 515A319 (72582)	EA	12				•	•	•	•	•	75	16
PAFZZ	5307-276-8119	STUD, PLAIN: CYLINDER HEAD, ONE END 5/8-11 IN. THD SIZE, OTHER END 5/8-18 IN. THD SIZE, 6 3/8 IN. LG 5183329 (72582)	EA	16	•	•	•	•	•	•	•	•	75	17
PAFZZ	2815-354-1528	INSERT, CYLINDER, SLEEVE 5184484 (72582)	EA	24	•	•	•	•	•	•	•	•	75	18
XDOZZ		TUBE ASSEMBLY, METAL: AIR BOX DRAIN 5158825 (72582)	EA	8									75	19
XDOZZ		ELBOW, PIPE: AIR BOX, DRAIN, 1/8-27 THD SIZE 137422 (72582)	EA	8									75	20
PAHZZ	5306-274-1966	BOLT, MACHINE: BEARING CAP, 5/8-11 THD SIZE, 5 IN. LG 5152149 (72582)	EA	56				•	•	•	•	•	75	21

	(1) SMR CODE	(2) FEDERAL STOCK NUMBER	(3) DESCRIPTION — REF NUMBER & MFR CODE / USABLE ON CODE	(4) UNIT OF MEAS	(5) QTY INC IN UNIT	(6) 30-DAY DS MAINT ALLOWANCE (a) 1-20	(b) 21-50	(c) 51-100	(7) 30-DAY GS MAINT ALLOWANCE (a) 1-20	(b) 21-50	(c) 51-100	(8) 1-YR ALW PER 100 EQUIP CNTGY	(9) DEPOT MAINT ALW PER 100 EQUIP	(10) ILLUSTRATION (a) FIG. NO.	(b) ITEM NO.
C	PAHZZ	5310-820-6653	WASHER, LOCK: BEARING CAP, 5/8 IN. MS35338-50 (96906)	EA	56				•	•	•	•	•	75	22
R	XAHZZ		CAP, BEARING 5158674 (72582)	EA	28									75	23
	XDHZZ		PIN, STRAIGHT, HEADLESS: BEARING THRUST, WASHER 141346 (72582)	EA	16									75	24
	PAHZZ	5307-364-3246	STUD, PLAIN: OIL PUMP TO BEARING CAP 5150129 (72582)	EA	8				•	•	•	•	•	75	25
R	PAFZZ	5305-269-3208	SCREW, CAP, HEXAGON HEAD: BLOCK HOLE FILLER, 3/8-16 THD SIZE, 5/8 IN. LG MS90725-57 (96906)	EA	4	•	•	•	•	•	•	•	•	75	26
	PAFZZ	5310-637-9541	WASHER, LOCK: HOLE FILLER SCREW, 3/8 IN. SCREW SIZE MS35338-46 (96906)	EA	4	•	•	•	•	•	•	•	•	75	27
	PAFZZ	5310-080-6004	WASHER, FLAT: HOLE FILLER SCREW, 3/8 IN. SCREW SIZE MS27183-14 (96906)	EA	4	•	•	•	•	•	•	•	•	75	28
	PAHZZ	5305-269-3211	SCREW, CAP, HEXAGON HEAD: CYLINDER BLOCK REAR, END PLATE MTG, 3/8-16 THD SIZE, 1 IN. LG MS90725-60 (96906)	EA	24				•	•	•	•	•	75	29
	PAHZZ	5310-637-9541	WASHER, LOCK: CYLINDER BLOCK, REAR, END PLATE MTG, 3/8 IN. SCREW SIZE MS35338-46 (96906)	EA	24				•	•	•	•	•	75	30
R	XDHZZ		PLATE, END: CYLINDER BLOCK, REAR 5150060 (72582)	EA	4									75	31
	KFHZZ		GASKET: END PLATE, FRONT, REAR 5177798 (72582) (PART OF SET, FSN 5330-379-4301)	EA	8									75	32
	PAHZZ	5305-269-3211	SCREW, CAP, HEXAGON HEAD: FRONT, END PLATE MTG, 3/8-16 THD SIZE, 1 IN. LG MS90725-60 (96906)	EA	24				•	•	•	•	•	75	33
	PAHZZ	5310-637-9541	WASHER, LOCK: FRONT, END PLATE MTG, 3/8 IN. SCREW SIZE MS35338-46 (96906)	EA	24				•	•	•	•	•	75	34
	PAHZZ	5305-071-1767	SCREW, CAP, HEXAGON HEAD: FRONT, END PLATE MTG, 1/2-13 THD SIZE, 1 1/8 IN. LG MS90725-110 (96906)	EA	8				•	•	•	•	•	75	35
	PAHZZ	5310-584-5272	WASHER, LOCK: FRONT, END PLATE MTG, 1/2 IN. SCREW SIZE MS35338-48 (96906)	EA	8				•	•	•	•	•	75	36
	XDHZZ		PLATE: CYLINDER BLOCK, FRONT END 5111686 (72582)	EA	4									75	37
	PAFZZ	5306-018-9691	BOLT, MACHINE: CYLINDER BLOCK, WATER HOLE COVER, 5/16-18 THD SIZE, 3/4 IN. LG 189691 (72582)	EA	4	•	•	•	•	•	•	•	•	75	38
	PAFZZ	5310-407-9566	WASHER, LOCK: CYLINDER BLOCK, WATER HOLE COVER SCREW, 5/16 IN. SCREW SIZE MS35338-45 (96906)	EA	4	•	•	•	•	•	•	•	•	75	39
	XDFZZ	5340-363-7294	COVER: WATER DRAIN HOLE 5164190 (72582)	EA	4									75	40
	KFFZZ		GASKET: WATER HOLE COVER 5116357 (72582) (PART OF SET, FSN 5330-379-4301)	EA	2									75	41

	(1) SMR CODE	(2) FEDERAL STOCK NUMBER	(3) DESCRIPTION REF NUMBER & MFR CODE	USABLE ON CODE	(4) UNIT OF MEAS	(5) QTY INC IN UNIT	(6) 30-DAY DS MAINT ALLOWANCE (a) 1-29	(b) 30-50	(c) 51-100	(7) 30-DAY GS MAINT ALLOWANCE (a) 1-20	(b) 21-50	(c) 51-100	(8) 1-YR ALW PER 100 EQUIP CNTGY	(9) DEPOT MAINT ALW PER 100 EQUIP	(10) ILLUSTRATION (a) FIG. NO.	(b) ITEM NO.
R	PAFZZ	5305-018-7069	SCREW, CAP, HEXAGON HEAD: HAND HOLE, COVER MTG, 3/8-16 THD SIZE, 2 1/8 IN. LG 108608 (72582)		EA	32	•	•	•	•	•	•	•	•	75	42
	PAFZZ	5310-080-6604	WASHER, FLAT: HAND HOLE COVER SCREW, 3/8 IN. SCREW SIZE MS27183-14 (96906)		EA	32	•	•	•	•	•	•	•	•	75	43
	KFFZZ		GASKET: HAND HOLE COVER SCREW, 3/8 IN. COPPER 105451 (72582)		EA	32									75	44
	XDFZZ		COVER: PLATE ACCESS CYLINDER BLOCK, HAND HOLE 5153117 (72582)		EA	32									75	45
	PCFZZ	5330-425-5142	GASKET: HAND HOLE COVER 5150020 (72582)		EA	32	•	•	•	•	•	•	•	•	75	46
	PAFZZ	4820-845-1096	COCK, DRAIN: CYLINDER BLOCK, 1/4 IN. MS35783-2 (96906)		EA	8	•	•	•	•	•	•	•	•	75	47
	PAFZZ	5306-018-9691	BOLT, MACHINE: CYLINDER BLOCK WATER HOLE COVER, 5/16-18 THD SIZE, 3/4 IN. LG 189691 (72582)		EA	4	•	•	•	•	•	•	•	•	75	48
	PAFZZ	5310-407-9566	WASHER, LOCK: CYLINDER BLOCK, WATER HOLE COVER SCREW, 5/16 IN. SCREW SIZE MS35338-45 (96906)		EA	4	•	•	•	•	•	•	•	•	75	49
R	XDFZZ		COVER, CYLINDER BLOCK, WATER HOLE 5164190 (72582)		EA	4									75	50
	KFFZZ	5330-613-9397	GASKET: WATER HOLE COVER 5116357 (72582) (PART OF SET, FSN 5330-379-4301)		EA	2									75	51
	XDFZZ		RAIL: LH ENGINE MTG 5186423 (72582)		EA	1										
	XDFZZ		RAIL: RH ENGINE MTG 5186422 (72582)		EA	1										
	PAFDD	2815-522-1871	POWER UNIT, MULTIPLE ENGINE 12005ARHSTBDCW (72582)		EA	1	•	•	•	•	•	•	•	•	75	
	PAFDD	2815-522-1872	POWER UNIT, MULTIPLE ENGINE 12006ALHPORTCCW (72582)		EA	1	•	•	•	•	•	•	•	•	75	
	PAFZZ	5305-053-8993	SCREW, CAP, HEXAGON: 1/2-13 X 1 3/8 IN. LG MS90725-112 (96906)		EA	4	•	•	•	•	•	•	•	•		
C	PAFZZ	5305-071-2070	SCREW, CAP, HEXAGON HEAD: 1/2-13 THD SIZE, 3/4 IN. LG MS90728-114 (96906)		EA	8	•	•	•	•	•	•	•	•		
	PAFZZ	5310-584-5272	WASHER, LOCK: 1/2 IN. MS35338-48 (96906)		EA	12	•	•	•	•	•	•	•	•		
	XDFZZ		BRACKET, SUPPORT ENGINE 5158557 (72582)		EA	2										
	XDFZZ		BRACKET, SUPPORT: FRONT 5172451 (72582)		EA	2										
R	PAFZZ	5305-071-1767	SCREW, CAP, HEXAGON HEAD: 5/16-18 THD SIZE, 1 1/2 IN. LG MS90725-110 (96906)		EA	4	•	•	•	•	•	•	•	•		
	PAFZZ	5305-071-2067	SCREW, CAP, HEXAGON HEAD: 1/2-13 THD SIZE, 1 1/4 IN. LG MS90728-111 (96906)		EA	2	•	•	•	•	•	•	•	•		
	PAFZZ	5305-206-6235	SCREW, CAP, HEXAGON HEAD: 1/2-20 THD SIZE, 1 3/4 IN. LG 181433 (72582)		EA	6	•	•	•	•	•	•	•	•		

(1) SMR CODE	(2) FEDERAL STOCK NUMBER	(3) DESCRIPTION REF NUMBER & MFR CODE	USABLE ON CODE	(4) UNIT OF MEAS	(5) QTY INC IN UNIT	(6) 30-DAY DS MAINT ALLOWANCE (a) 1-20	(b) 21-50	(c) 51-100	(7) 30-DAY GS MAINT ALLOWANCE (a) 1-20	(b) 21-50	(c) 51-100	(8) 1-YR ALW PER 100 EQUIP CNTGY	(9) DEPOT MAINT ALW PER 100 EQUIP	(10) ILLUSTRATION (a) FIG. NO.	(b) ITEM NO.
PAFZZ		SCREW, CAP, HEXAGON HEAD: 1/2-13 THD SIZE, 4 IN. LG 442734 (72582)		EA	2	•	•	•	•	•	•	•	•		
PAFZZ	5310-584-5272	WASHER, LOCK: 1/2 IN. MS35338-48 (96906)		EA	12	•	•	•	•	•	•	•	•		
R PAFZZ	5310-121-1965	NUT, PLAIN, HEXAGON: 1/2-20 THD SIZE 117051 (72582)		EA	6	•	•	•	•	•	•	•	•		
XDFZZ		PLATE, SUPPORT 5172455 (72582)		EA	1										
XDFZZ		PLATE, FRONT, SUPPORT 5157879 (72582)		EA	1										
PAFZZ		MOUNT, RESILIENT: ENGINE 3X6X5-8INTHK (73015)	AB	EA	8	•	•	•	•	•	•	•	•		
		GROUP 56 - ENGINE PILOT HOUSE CONTROLS													
PBFHH	2010-591-2614	CONTROL, MARINE MODEL: MD36 H18066 (81625)	B	EA	1	•	•	•	•	•	•	•	•	76	
PBFHH	2010-592-0286	PILOT HOUSING UNIT ASSEMBLY E19249 (81625)	B	EA	1	•	•	•	•	•	•	•	•	76	
PAFZZ	3020-231-8734	LINK, CONNECTING: ROLLER CHAIN E19249-3 (81625)	B	EA	4	•	•	•	•	•	•	•	•	76	1
MAFZZ		CHAIN ASSEMBLY, ROLLER: 40 1/2 IN. E19249-2 (81625) MANUFACTURE FROM:	B	EA	2									76	2
PAFZZ	3020-196-0803	CHAIN, AS REQUIRED 821CHAIN40-1RCA (96906)		FT		•	•	•	•	•	•			76	
XDFZZ		THIMBLE, WIRE ROPE E19249-4 (81625)	B	EA	2									76	3
PBFHH	2590-769-9880	PILOT, HOUSE, MAIN ASSEMBLY CONTROL E19248 (81625)	B	EA	1	•	•	•	•	•	•	•	•	76	
PAFZZ		NUT, PLAIN, HEXAGON: STRUT MTG, 7/16-14 THD SIZE MS51967-11TYPE2STYLE1GRADEB (96906)	B	EA	2	•	•	•	•	•	•	•	•	76	4
PAFZZ	5310-209-0965	WASHER, LOCK: STRUT MTG, 7/16 IN. SCREW SIZE MS35338-47 (96906)	B	EA	2	•	•	•	•	•	•	•	•	76	5
PAFZZ	5305-889-2910	SCREW, CAP, HEXAGON HEAD: STRUT MTG, 7/16-14 THD SIZE, 1 1/4 IN. LG MS35307-387 (96906)	B	EA	2	•	•	•	•	•	•	•	•	76	6
XDFZZ		STRUT, ROD END B19244 (81625)	B	EA	2									76	7
PAFZZ	5310-891-1754	NUT, PLAIN, HEXAGON: PLATE MTG, 3/8-16 IN. THD SIZE MS35691-18 (96906)	B	EA	9	•	•	•	•	•	•	•	•	76	8
PAFZZ	5310-637-9541	WASHER, LOCK: PLATE MTG, 3/8 IN. SCREW SIZE MS35338-46 (96906)	B	EA	9	•	•	•	•	•	•	•	•	76	9
PAFZZ	5305-984-5695	SCREW, MACHINE: PLATE MTG, RD HD, SLOTTED, 3/8-16 THD SIZE, 2 IN. LG MS35206-315 (96906)	B	EA	9	•	•	•	•	•	•	•	•	76	10
PAFZZ	5330-592-0452	WASHER, SEALING: PLATE MTG, 3/8 IN. SCREW SIZE A19243 (81625)	B	EA	9	•	•	•	•	•	•	•	•	76	11
PAFZZ		PLATE, RAISED: FLAT MTG D19208 (81625)	B	EA	1	•	•	•	•	•	•	•	•	76	12

(1) SMR CODE	(2) FEDERAL STOCK NUMBER	(3) DESCRIPTION REF NUMBER & MFR CODE	USABLE ON CODE	(4) UNIT OF MEAS	(5) QTY INC IN UNIT	(6) 30-DAY DS MAINT ALLOWANCE (a) 1-20	(b) 21-50	(c) 51-100	(7) 30-DAY GS MAINT ALLOWANCE (a) 1-20	(b) 21-50	(c) 51-100	(8) 1-YR ALW PER 100 EQUIP CNTGY	(9) DEPOT MAINT ALW PER 100 EQUIP	(10) ILLUSTRATION (a) FIG. NO.	(b) ITEM NO.
PCFZZ	5330-592-0456	GASKET: MTG, PLATE, BOTTOM D19245 (41625)	B	EA	1	•	•	•	•	•	•	•	•	76	13
XDFZZ		SUPPORT, STRUT MOUNTING B19207 (41625)	B	EA	2									76	14
PAFZZ		SCREW, MACHINE: PILOT HOUSE UNIT MTG, FILLISTER HD, SLOTTED, 1/4-20 THD SIZE, 3/4 IN. LG E19248-5 (41625)	B	EA	10	•	•	•	•	•	•	•	•	76	15
PAFZZ	5310-836-2458	WASHER, LOCK: PILOT HOUSE UNIT MTG, 1/4 IN. SCREW SIZE MS122027 (96906)	B	EA	10	•	•	•	•	•	•	•	•	76	16
PCFZZ	5330-592-0458	GASKET: PILOT HOUSE MTG, TOP B18389 (41625)	B	EA	1	•	•	•	•	•	•	•	•	76	17
XDFZZ		SCREW, MACHINE: NEUTRAL PLATE MTG, RD HD, SLOTTED, 1/4-20 THD SIZE, 3/8 IN. LG E19248-10 (41625)	B	EA	2									76	18
XDFZZ		WASHER, SEALING: NEUTRAL PLATE MTG, 1/4 IN. SCREW SIZE A18400 (41625)	B	EA	2									76	19
XDFZZ		PLATE: NEUTRAL INDICATOR A1206 (41625)	B	EA	1									76	20
PBFZZ	2590-769-9881	PILOT HOUSE CONTROL ASSEMBLY E19247 (41625)	B	EA	2	•	•	•	•	•	•	•	•	76	
XDFZZ		SCREW, MACHINE: NAMEPLATE MTG, FILLISTER HD, NO. 6/32 THD SIZE, 1/4 IN. LG E19247-9 (41625)	B	EA	4									76	21
XDFZZ		PLATE, IDENTIFICATION: NAME D13251 (41625)	B	EA	2									76	22
PAOZZ	5305-273-5630	SCREW, CAP, SOCKET HEAD: CONTROL ARM, 5/16-18 THD SIZE, 3/4 IN. LG MS35461-36 (96906)	B	EA	4	•	•	•	•	•	•	•	•	76	23
XDOZZ		ARM, CONTROL D18356 (41625)	B	EA	4									76	24
PAOZZ		SETSCREW: INDICATOR CUP MTG, SLOTTED HD, CUP POINT, 5/16-18 THD SIZE E19247-1 (41625)	B	EA	4	•	•	•	•	•	•	•	•	76	25
XDFZZ		INDICATOR, PILOT HOUSE CONTROL A18350 (41625)	B	EA	4									76	26
XDHZZ		WASHER, PILOT HOUSE UNIT SHAFT A18352 (41625)	B	EA	4									76	27
PAHZZ		SCREW, MACHINE: FLANGE MTG, SLOTTED, FLAT HD, NO. 6-32 THD SIZE, 5/8 IN. LG E19247-4 (41625)	B	EA	24				•	•	•	•	•	76	28
XDHZZ		FLANGE, PILOT HOUSE UNIT B18354 (41625)	B	EA	4									76	29
PCHZZ	5330-456-7019	PACKING, PREFORMED: SHAFT E19247-6 (41625)	B	EA	4				•	•	•	•	•	76	30
PCHZZ	5330-592-0457	GASKET: FLANGE A18639 (41625)	B	EA	4				•	•	•	•	•	76	31
XDHZZ		PLUG, PIPE: CONTROL HOUSING, SLOTTED HD, 1/8-27 THD SIZE E19247-10 (41625)	B	EA	4									76	32

(1) SMR CODE	(2) FEDERAL STOCK NUMBER	(3) DESCRIPTION REF NUMBER & MFR CODE	USABLE ON CODE	(4) UNIT OF MEAS	(5) QTY INC IN UNIT	(6) 30-DAY DS MAINT ALLOWANCE (a) 1-20	(b) 21-50	(c) 51-100	(7) 30-DAY GS MAINT ALLOWANCE (a) 1-20	(b) 21-50	(c) 51-100	(8) 1-YR ALW PER 100 EQUIP CNTGY	(9) DEPOT MAINT ALW PER 100 EQUIP	(10) ILLUSTRATION (a) FIG. NO.	(b) ITEM NO.
PAHZZ		SETSCREW: SPROCKET MTG A18578 (41625)	B	EA	4				•	•	•	•	•	76	33
XDHZZ		SPROCKET, PILOT UNIT B18355 (41625)	B	EA	2									76	34
PAHZZ	3110-142-4493	BEARING, BALL: SHAFT E19247-5 (41625)	B	EA	6				•	•	•	•	•	76	35
XDHZZ		SPACER, BEARING A18435 (41625)	B	EA	4									76	36
XDHZZ		SPROCKET, PILOT UNIT B18355 (41625)	B	EA	2									76	37
XDHZZ		PIN, LOCK A18642 (41625)	B	EA	2									76	38
PAHZZ	3110-142-4493	BEARING, BALL: SHAFT E19247-5 (41625)	B	EA	2				•	•	•	•	•	76	39
XDHZZ		SPACER, BEARING A18435 (41625)	B	EA	4									76	40
PAHZZ		KEY, WOODRUFF: SPROCKET, NO. 7 E18247-3 (41625)	B	EA	4				•	•	•	•	•	76	41
XDHZZ		SHAFT, PILOT HOUSE UNIT A18351 (41625)	B	EA	4									76	42
XAHZZ		HOUSING, CONTROL E18361-1 (41625)	B	EA	2									76	43
XDFZZ		TERMINAL BLOCK ASSEMBLY D18714 (41625)	B	EA	8									77	
PAFZZ	5310-768-0319	NUT, PLAIN, HEXAGON: COVER MTG, 1/4-28 THD SIZE MS51968-2 (96906)	B	EA	16	•	•	•	•	•	•	•	•	77	1
PAFZZ	5310-582-5965	WASHER, LOCK: COVER MTG, 1/4 IN. SCREW SIZE MS35338-44 (96906)	B	EA	16	•	•	•	•	•	•	•	•	77	2
PAFZZ	5305-688-2019	SCREW, CAP, HEXAGON HEAD: COVER MTG, 1/4-28 THD SIZE, 1 1/2 IN. LG MS35308-312 (96906)	B	EA	16	•	•	•	•	•	•	•	•	77	3
XAFZZ		COVER, TERMINAL BLOCK A18683 (41625)	B	EA	8									77	4
XDFZZ		PULLEY, GROOVE D18715-2 (41625)	B	EA	16									77	5
PAFZZ	5310-891-1751	NUT, PLAIN, HEXAGON: BODY, 3/8-24 THD SIZE MS35691-32 (96906)	B	EA	16	•	•	•	•	•	•	•	•	77	6
PAFZZ	5310-637-9541	WASHER, LOCK: BODY, 3/8 IN. SCREW SIZE MS35338-46 (96906)	B	EA	32	•	•	•	•	•	•	•	•	77	7
PAFZZ	5305-591-9257	SCREW, CAP, HEXAGON HEAD: BODY, 3/8-24 THD SIZE, 2 1/4 IN. LG MS35308-367 (96906)	B	EA	16	•	•	•	•	•	•	•	•	77	8
PAFZZ	5310-891-1751	NUT, PLAIN, HEXAGON: BODY, 3/8-24 THD SIZE MS35691-32 (96906)		EA	16	•	•	•	•	•	•	•	•	77	9
PAFZZ	5310-637-9541	WASHER, LOCK: BODY, 3/8 IN. SCREW SIZE MS35338-46 (96906)	B	EA	16	•	•	•	•	•	•	•	•	77	10
PAFZZ	5305-531-1097	SCREW, CAP, HEXAGON HEAD: BODY, 3/8-24 THD SIZE, 1 3/4 IN. LG MS35308-365 (96906)	B	EA	16	•	•	•	•	•	•	•	•	77	11

(1) SMR CODE	(2) FEDERAL STOCK NUMBER	(3) DESCRIPTION REF NUMBER & MFR CODE	USABLE ON CODE	(4) UNIT OF MEAS	(5) QTY INC IN UNIT	(6) 30-DAY DS MAINT ALLOWANCE (a) 1-20	(b) 21-50	(c) 51-100	(7) 30-DAY GS MAINT ALLOWANCE (a) 1-20	(b) 21-50	(c) 51-100	(8) 1-YR ALW PER 100 EQUIP CNTGY	(9) DEPOT MAINT ALW PER 100 EQUIP	(10) ILLUSTRATION (a) FIG. NO.	(b) ITEM NO.
XAFZZ		BODY, TERMINAL BLOCK E18553-1 (41625)	B	EA	8									77	12
PBHZZ		KIT ASSEMBLY, ENGINE, PORT H18800 (41625) (COMPONENTS SAME AS KIT, P/N H18799 (41625), EXCEPT WHERE INDIVIDUAL COMPONENTS ARE ANNOTATED)	B	EA	1				•	•	•	•	•	78	
PBHZZ	2010-591-2615	KIT ASSEMBLY, ENGINE: STARBOARD H18799 (41625)	B	EA	1				•	•	•	•	•	78	
PAQZZ	5310-891-1751	NUT, PLAIN, HEXAGON: ARM MTG, 3/8-24 THD SIZE MS35691-32 (96906)	B	EA	6	•	•	•	•	•	•	•	•	78	1
PAQZZ	5310-637-9541	WASHER, LOCK: ARM MTG, 3/8 IN. SCREW SIZE MS35338-46 (96906)	B	EA	2	•	•	•	•	•	•	•	•	78	2
PAQZZ	5305-591-9257	SCREW, CAP, HEXAGON HEAD: ARM MTG, 3/8-24 THD SIZE, 2 1/4 IN. LG MS35308-367 (96906)	B	EA	2	•	•	•	•	•	•	•	•	78	3
XDFZZ		ARM, ENGINE CONTROL UNIT: RH D18801 (41625) (USED WITH KIT, P/N H18799 (41625), ONLY)		EA	2									78	4
XDFZZ		ARM, ENGINE CONTROL UNIT: LH D19317 (41625) (USED WITH KIT, P/N H18800 (41625), ONLY)	B	EA	1									78	5
PAFZZ	5305-721-5298	SCREW, CAP, HEXAGON HEAD: ENGINE CONTROL GEAR, CASE MTG, 7/16-14 THD SIZE, 1 IN. LG MS35307-385 (96906)	B	EA	6	•	•	•	•	•	•	•	•	78	6
PAFZZ	5310-655-9370	WASHER, LOCK: ENGINE CONTROL GEAR, CASE MTG, 7/16 IN. SCREW SIZE MS35340-47 (96906)	B	EA	6	•	•	•	•	•	•	•	•	78	7
PAFZZ	5310-687-6398	NUT, PLAIN, HEXAGON: CLUTCH ARM AND ROD END MTG, 5/16-24 THD SIZE MS25082-5 (96906)	B	EA	4	•	•	•	•	•	•	•	•	78	8
PAFZZ	5310-407-9566	WASHER, LOCK: CLUTCH ARM MTG, 5/16 IN. SCREW SIZE MS35338-45 (96906)	B	EA	2	•	•	•	•	•	•	•	•	78	9
PAFZZ	5305-514-7632	SCREW, CAP, HEXAGON HEAD: CLUTCH ARM MTG, 5/16-24 THD SIZE, 1 3/4 IN. LG QQS633FS1010 (81348)	B	EA	2	•	•	•	•	•	•	•	•	78	10
XDFZZ		ARM, CLUTCH A18813 (41625)	B	EA	2									78	11
XDFZZ		ROD, HYDRAULIC, VALVE A18818 (41625)	B	EA	2									78	12
PAFZZ	5310-687-6398	NUT, PLAIN, HEXAGON: CLUTCH ARM AND ROD END MTG, 5/16-24 THD SIZE MS25082-5 (96906)	B	EA	2	•	•	•	•	•	•	•	•	78	13
XDFZZ		ROD, END, SPHERICAL H18799-25 (41625)	B	EA	4									78	14
PBFZZ	3010-769-9969	COUPLING ASSEMBLY, FLEXIBLE B19150 (41625)	B	EA	2	•	•	•	•	•	•	•	•	78	
PAHZZ		NUT, SELF-LOCKING: FLANGE COUPLING MTG, 3/8-24 THD SIZE 21E064 (72962)	B	EA	8				•	•	•	•	•	78	15

(1) SMR CODE	(2) FEDERAL STOCK NUMBER	(3) DESCRIPTION REF NUMBER & MFR CODE	USABLE ON CODE	(4) UNIT OF MEAS	(5) QTY INC IN UNIT	(6) 30-DAY DS MAINT ALLOWANCE (a) 1-20	(b) 21-50	(c) 51-100	(7) 30-DAY GS MAINT ALLOWANCE (a) 1-20	(b) 21-50	(c) 51-100	(8) 1-YR ALW PER 100 EQUIP CNTGY	(9) DEPOT MAINT ALW PER 100 EQUIP	(10) ILLUSTRATION (a) FIG. NO.	(b) ITEM NO.
PAHZZ	5305-685-3509	SCREW, CAP, HEXAGON HEAD: FLANGE COUPLING MTG, 3/8-24 THD SIZE, 1 1/4 IN. LG MS35308-362 (96906)	B	EA	8				•	•	•	•	•	78	16
PAHZZ		WASHER, FLAT: FLANGE COUPLING MTG, 3/8 IN. SCREW SIZE B19150-4 (41625)	B	EA	8				•	•	•	•	•	78	17
PAHZZ		SETSCREW: FLANGE COUPLING, CUP POINT, SLOTTED HD, 5/16-18 THD SIZE, 1/2 IN. LG B19150-2 (41625)	B	EA	4				•	•	•	•	•	78	18
PAHZZ		SETSCREW: FLANGE COUPLING MTG, 5/16-18 THD SIZE, 5/8 IN. LG B19150-3 (41625)	B	EA	4				•	•	•	•	•	78	19
XDHZZ		PLATE, COUPLING A18960 (41625)	B	EA	8									78	20
XDHZZ		FLANGE, COUPLING B18937 (41625)	B	EA	4									78	21
PAHZZ		KEY, MACHINE: FLEXIBLE COUPLING A19176 (41625)	B	EA	4				•	•	•	•	•	78	22
PAHZZ		KEY, WOODRUFF: FLEXIBLE COUPLING H18799-22 (41625)	B	EA	4				•	•	•	•	•	78	23
PAFZZ	5310-687-6398	NUT, PLAIN, HEXAGON: PLATE MTG, 5/16-24 THD SIZE MS25082-5 (96906)	B	EA	4				•	•	•	•	•	78	24
PAFZZ	5310-407-9566	WASHER, LOCK: PLATE MTG, 5/16 IN. SCREW SIZE MS35338-45 (96906)	B	EA	4	•	•	•	•	•	•	•	•	78	25
PAFZZ		SCREW, CAP, HEXAGON HEAD: PLATE MTG, 5/16-24 THD SIZE, 7/8 IN. LG H18799-21 (41625)	B	EA	4	•	•	•	•	•	•	•	•	78	26
XDFZZ		PLATE, GEAR MOUNTING D18804 (41625)	B	EA	2									78	27
PCFZZ	5330-456-6971	GASKET: VALVE SELECTOR A19356 (41625)	B	EA	4	•	•	•	•	•	•	•	•	78	28
PAFZZ	5310-934-9747	NUT, PLAIN, HEXAGON: BRACE MTG, NO. 6-32 THD SIZE MS35649-262 (96906)	B	EA	8	•	•	•	•	•	•	•	•	78	29
PAFZZ	5310-883-9385	WASHER, LOCK: BRACE MTG, NO. 6 SCREW SIZE MS35338-135 (96906)	B	EA	8	•	•	•	•	•	•	•	•	78	30
PAFZZ		SCREW, MACHINE: BRACE MTG, RD HD, NO. 6-32 THD SIZE, 3/8 IN. LG H18799-38 (41625)	B	EA	8	•	•	•	•	•	•	•	•	78	31
XBFZZ		BRACE: GEAR CASE, MTG PLATE D18805 (41625)	B	EA	2									78	32
PAFZZ	5310-687-6398	NUT, HEXAGON, SELF-LOCKING: THROTTLE RODS MTG, 3/8-24 THD SIZE MS25082-5 (96906)	B	EA	4	•	•	•	•	•	•	•	•	78	33
PAFZZ	5305-269-2807	SCREW, CAP, HEXAGON HEAD: THROTTLE ROD MTG, 3/8-24 THD SIZE, 1 1/2 IN. LG MS90726-64 (96906)	B	EA	4	•	•	•	•	•	•	•	•	78	34
PAFZZ	5310-687-6398	NUT, PLAIN, HEXAGON: ARM MTG, 3/8-24 THD SIZE MS25082-5 (96906)	B	EA	2	•	•	•	•	•	•	•	•	78	35

(1) SMR CODE	(2) FEDERAL STOCK NUMBER	(3) DESCRIPTION REF NUMBER & MFR CODE	USABLE ON CODE	(4) UNIT OF MEAS	(5) QTY INC IN UNIT	(6) 30-DAY DS MAINT ALLOWANCE (a) 1-20	(b) 21-50	(c) 51-100	(7) 30-DAY GS MAINT ALLOWANCE (a) 1-20	(b) 21-50	(c) 51-100	(8) 1-YR ALW PER 100 EQUIP CNTGY	(9) DEPOT MAINT ALW PER 100 EQUIP	(10) ILLUSTRATION (a) FIG. NO.	(b) ITEM NO.
PAFZZ	5310-637-9541	WASHER, LOCK: ARM MTG, 3/8 IN. SCREW SIZE MS35338-46 (96906)	B	EA	2	•	•	•	•	•	•	•	•	78	36
PAFZZ	5305-269-2809	SCREW, CAP, HEXAGON HEAD: ARM MTG, 3/8-24 THD SIZE, 2 IN. LG MS90726-66 (96906)	B	EA	2	•	•	•	•	•	•	•	•	78	37
XDFZZ		ARM, ENGINE JACK D188662 (41625)	B	EA	2									78	38
PAFZZ		KEY, WOODRUFF: ARM MTG H18799-31 (41625)	B	EA	2	•	•	•	•	•	•	•	•	78	39
XDFZZ		ROD END H18799-26 (41625)	B	EA	1									78	40
PAFZZ	5310-687-6398	NUT, PLAIN, HEXAGON: THROTTLE ROD, 3/8-24 THD SIZE MS25082-5 (96906)	B	EA	1	•	•	•	•	•	•	•	•	78	41
XDFZZ		ROD, THROTTLE A18816 (41625)	B	EA	2	•								78	42
PAFZZ	5310-687-6398	NUT, PLAIN, HEXAGON: THROTTLE ROD, 3/8-24 THD SIZE MS25082-5 (96906)	B	EA	1	•	•	•	•	•	•	•	•	78	43
PAFZZ	5310-687-6398	NUT, PLAIN, HEXAGON: THROTTLE ROD, 3/8-24 THD SIZE MS25082-5 (96906)	B	EA	2	•	•	•	•	•	•	•	•	78	44
PAFZZ	5305-269-2809	SCREW, CAP, HEXAGON HEAD: THROTTLE ROD MTG, 3/8-24 THD SIZE, 2 IN. LG MS90726-66 (96906)	B	EA	2	•	•	•	•	•	•	•	•	78	45
PAFZZ		WASHER, FLAT: THROTTLE ROD MTG, 3/8 IN. SCREW SIZE H18799-15 (41625)	B	EA	2	•	•	•	•	•	•	•	•	78	46
XDFZZ		ROD END H18799-26 (41625)	B	EA	1									78	47
XDFZZ		PLATE, LOCK A18684 (41625)	B	EA	2									78	48
PAFZZ	5310-687-6398	NUT, PLAIN, HEXAGON: ADJUSTABLE ARM, 5/16-24 THD SIZE MS25082-5 (96906)	B	EA	4	•	•	•	•	•	•	•	•	78	49
PAFZZ	5310-407-9566	WASHER, LOCK: ADJUSTABLE ARM MTG, 5/16 IN. SCREW SIZE MS35338-45 (96906)	B	EA	4	•	•	•	•	•	•	•	•	78	50
PAFZZ		SCREW, CAP, HEXAGON HEAD: ADJUSTABLE ARM, 5/16-24 THD SIZE, 2 IN. LG H18799-18 (41625)	B	EA	4	•	•	•	•	•	•	•	•	78	51
XDFZZ		ARM, ADJUSTABLE D18664 (41625)	B	EA	2									78	52
XDFZZ		ROD END H18799-26 (41625)	B	EA	1									78	53
PAFZZ	5310-687-6398	NUT, PLAIN, HEXAGON: ROD, 3/8-24 THD SIZE MS25082-5 (96906)		EA	1	•	•	•	•	•	•	•	•	78	54
XDFZZ		ROD, LINKAGE A18817 (41625)	B	EA	2									78	55
PAFZZ	5310-687-6398	NUT, PLAIN, HEXAGON: ROD, 3/8-24 THD SIZE MS25082-5 (96906)	B	EA	1	•	•	•	•	•	•	•	•	78	56
PAFZZ		SETSCREW: CLEVIS, SQ HD, 3/8-16 THD SIZE, 5/8 IN. LG H18799-35 (41625)	B	EA	4	•	•	•	•	•	•	•	•	78	57

(1) SMR CODE	(2) FEDERAL STOCK NUMBER	(3) DESCRIPTION REF NUMBER & MFR CODE	USABLE ON CODE	(4) UNIT OF MEAS	(5) QTY INC IN UNIT	(6) 30-DAY DS MAINT ALLOWANCE (a) 1-20	(b) 21-50	(c) 51-100	(7) 30-DAY GS MAINT ALLOWANCE (a) 1-20	(b) 21-50	(c) 51-100	(8) 1-YR ALW PER 100 EQUIP CNTGY	(9) DEPOT MAINT ALW PER 100 EQUIP	(10) ILLUSTRATION (a) FIG. NO.	(b) ITEM NO.
XDFZZ		STRUT, ENGINE UNIT A19087 (41625)	B	EA	2									78	58
PAFZZ	5310-891-1733	NUT, PLAIN, HEXAGON: CLEVIS STRUT MTG 1/2-20 THD SIZE MS35691-38 (96906)	B	EA	2	•	•	•	•	•	•	•	•	78	59
PAFZZ	5310-584-5272	WASHER, LOCK: CLEVIS STRUT MTG, 1/2 IN. SCREW SIZE MS35338-48 (96906)	B	EA	2	•	•	•	•	•	•	•	•	78	60
PAFZZ	5305-725-4187	SCREW, CAP, HEXAGON HEAD: CLEVIS MTG, 1/2-20 THD SIZE, 1 3/4 IN. LG MS90726-114 (96906)	B	EA	2	•	•	•	•	•	•	•	•	78	61
XDFZZ		CLEVIS, ENGINE STRUT B18387 (41625)	B	EA	2									78	62
PAFZZ	5310-891-1733	NUT, PLAIN, HEXAGON: SUPPORT MTG, 1/2-20 THD SIZE MS35691-38 (96906)	B	EA	4	•	•	•	•	•	•	•	•	78	63
PAFZZ	5310-584-5272	WASHER, LOCK: SUPPORT MTG, 1/2 IN. SCREW SIZE MS35338-48 (96906)	B	EA	4	•	•	•	•	•	•	•	•	78	64
PAFZZ	5305-716-8183	SCREW, CAP, HEXAGON HEAD: SUPPORT STRUT MTG, 1/2-20 THD SIZE, 2 1/4 IN. LG MS90726-116 (96906)	B	EA	4	•	•	•	•	•	•	•	•	78	65
XDFZZ		STRUT, SUPPORT D19086 (14625)	B	EA	2									78	66
XDFZZ		SHAFT: STARBOARD, ENGINE, UNIT CONTROL B18802 (41625) (USED WITH KIT, P/N H18799 (41625))	B	EA	1									78	67
XDFZZ		SHAFT: PORT, ENGINE, UNIT CONTROL B18803 (41625) (USED WITH KIT, P/N H18800 (41625))	B	EA	1									78	68
PAFZZ	5310-835-2036	NUT, PLAIN, HEXAGON: FLANGE, CARTRIDGE MTG, 7/16-20 THD SIZE MS35691-29 (96906)	B	EA	8	•	•	•	•	•	•	•	•	78	69
PAFZZ	5310-209-0965	WASHER, LOCK: FLANGE, CARTRIDGE MTG, 7/16 IN. SCREW SIZE MS35338-47 (96906)	B	EA	8	•	•	•	•	•	•	•	•	78	70
PAFZZ	5305-710-4194	SCREW, CAP, HEXAGON HEAD: FLANGE, CARTRIDGE MTG, 7/16-20 THD SIZE, 1 1/2 IN. LG MS90726-89 (96906)	B	EA	8	•	•	•	•	•	•	•	•	78	71
XDFZZ		FLANGE, CARTRIDGE H18799-36 (41625)	B	EA	2									78	72
PAFZZ	5310-891-1754	NUT, PLAIN, HEXAGON: ARM MTG, SCREW, 3/8-16 THD SIZE MS35691-18 (96906)	B	EA	4	•	•	•	•	•	•	•	•	78	73
PAFZZ	5305-292-0913	SETSCREW: ARM, SQ HD, SLOTTED, 3/8-16 THD SIZE, 2 IN. LG 594211 (21450)	B	EA	4	•	•	•	•	•	•	•	•	78	74
PAFZZ	5310-687-6398	NUT, PLAIN, HEXAGON: ARM STOP MTG, 5/16-24 THD SIZE MS25082-5 (96906)	B	EA	8	•	•	•	•	•	•	•	•	78	75

(1) SMR CODE	(2) FEDERAL STOCK NUMBER	(3) DESCRIPTION REF NUMBER & MFR CODE	USABLE ON CODE	(4) UNIT OF MEAS	(5) QTY INC IN UNIT	(6) 30-DAY DS MAINT ALLOWANCE (a) 1-20	(b) 21-50	(c) 51-100	(7) 30-DAY GS MAINT ALLOWANCE (a) 1-20	(b) 21-50	(c) 51-100	(8) 1-YR ALW PER 100 EQUIP CMTGY	(9) DEPOT MAINT ALW PER 100 EQUIP	(10) ILLUSTRATION (a) FIG. NO.	(b) ITEM NO.
PAFZZ	5310-407-9566	WASHER, LOCK: ARM STOP MTG, 5/16 IN. SCREW SIZE MS35338-45 (96906)	B	EA	8	•	•	•	•	•	•	•	•	78	76
PAFZZ		SCREW, CAP, HEXAGON HEAD: ARM STOP MTG, 5/16-24 THD SIZE, 1 1/4 IN. LG H18799-7 (41625)	B	EA	8	•	•	•	•	•	•	•	•	78	77
PAFZZ		ARM, STOP D18663 (41625)	B	EA	1	•	•	•	•	•	•	•	•	78	78
PAFZZ	5305-021-3801	SCREW, CAP, HEXAGON HEAD: BEARING PLATE MTG, 1/2-13 THD SIZE, 1 1/4 IN. LG MS35307-111 (96906)	B	EA	8	•	•	•	•	•	•	•	•	78	79
PAFZZ	5310-584-5272	WASHER, LOCK: BEARING PLATE MTG, 1/2 IN. SCREW SIZE MS35338-48 (96906)	B	EA	8	•	•	•	•	•	•	•	•	78	80
XDFZZ		PLATE, BEARING E18665 (41625)	B	EA	2									78	81
PAFZZ	2010-591-2617	CASE, GEAR: ENGINE, CONTROL H18810 (41625)	B	EA	2	•	•	•	•	•	•	•	•	79	
PAOZZ	4730-770-0029	FITTING, LUBRICATION H18810-7 (41625)	B	EA	2	•	•	•	•	•	•	•	•	79	1
XDHZZ		PLUG, DETENT A18811 (41625)	B	EA	2									79	2
PAHZZ		WASHER, LOCK: PLUG A18252 (41625)	B	EA	2				•	•	•	•	•	79	3
PAHZZ	5340-770-0071	SPRING, COMPRESSION: BALL A18812 (41625)	B	EA	2				•	•	•	•	•	79	4
PAHZZ	3110-100-6158	BALL, BEARING H18810-5 (41625)	B	EA	2				•	•	•	•	•	79	5
PAHZZ		SCREW, CAP, HEXAGON HEAD: SIDE MTG, 5/16-24 THD SIZE, 1 IN. LG H18810-2 (41625)	B	EA	8				•	•	•	•	•	79	6
PAHZZ	5310-407-9566	WASHER, LOCK: SIDE MTG, 5/16 IN. SCREW SIZE MS35338-45 (96906)	B	EA	8				•	•	•	•	•	79	7
XAHZZ		SIDE, ENGINE UNIT E18231 (41625)	B	EA	2									79	8
PCHZZ	5330-592-0454	GASKET: ENGINE UNIT B18263 (41625)	B	EA	2				•	•	•	•	•	79	9
XAHZZ		SHAFT ASSEMBLY, THROTTLE: ENGINE UNIT B18815 (41625)	B	EA	2									79	
PAHZZ		SETSCREW: GEAR MTG, SLOTTED HD, 5/16-18 THD SIZE 5/8 IN. LG B18815-3 (41625)	B	EA	2				•	•	•	•	•	79	10
XAHZZ		GEAR, THROTTLE B18260 (41625)	B	EA	2									79	11
PAHZZ		KEY, WOODRUFF: GEAR TO SHAFT, NO. 11 H18815-2 (41625)	B	EA	2				•	•	•	•	•	79	12
XAHZZ		SHAFT, THROTTLE, ENGINE UNIT B18814 (41625)	B	EA	2									79	13
XDHZZ		SPACER, THROTTLE SHAFT A18253 (41625)	B	EA	2									79	14
XDHZZ		SPACER, THROTTLE SHAFT A18254 (41625)	B	EA	2									79	15

(1) SMR CODE	(2) FEDERAL STOCK NUMBER	(3) DESCRIPTION — REF NUMBER & MFR CODE	USABLE ON CODE	(4) UNIT OF MEAS	(5) QTY INC IN UNIT	(6) 30-DAY DS MAINT ALLOWANCE (a) 1-20	(b) 21-50	(c) 51-100	(7) 30-DAY GS MAINT ALLOWANCE (a) 1-20	(b) 21-50	(c) 51-100	(8) 1-YR ALW PER 100 EQUIP CNTGY	(9) DEPOT MAINT ALW PER 100 EQUIP	(10) ILLUSTRATION (a) FIG. NO.	(b) ITEM NO.
XEHZZ		SPACER, THROTTLE SHAFT A18254 (41625)	B	EA	2									79	15
XAHZZ		SHAFT ASSEMBLY, CLUTCH CONTROL A18258 (41625)	B	EA	2									79	
PAHZZ		SETSCREW: GEAR MTG, HEXAGON SOCKET HD, 5/16-18 THD SIZE, 5/8 IN. LG A18258-3 (41625)	B	EA	2				•	•	•	•	•	79	16
XAHZZ		GEAR, CLUTCH CONTROL B18259 (41625)	B	EA	2									79	17
PAHZZ		KEY, WOODRUFF: GEAR A18258-2 (41625)	B	EA	2				•	•	•	•	•	79	18
XAHZZ		SHAFT, CLUTCH CONTROL GEAR A18257 (41625)	B	EA	2									79	19
PAFZZ		PIN, COTTER H18810-10 (41625)	B	EA	2	•	•	•	•	•	•	•	•	79	20
PAHZZ		CAP, BEARING: ENGINE UNIT A18256 (41625)	B	EA	2				•	•	•	•	•	79	21
R PAHZZ	5365-804-7301	RING, RETAINING, INTERNAL MS16625-112 (96906)	B	EA	4				•	•	•	•	•	79	22
PAHZZ	3120-456-6920	RETAINER, BEARING ENGINE UNIT A18255 (41625)	B	EA	4				•	•	•	•	•	79	23
PAHZZ	3110-112-6022	BEARING, NEEDLE BR1616OH (60380)	B	EA	4				•	•	•	•	•	79	24
PAHZZ	3110-112-6009	BEARING, NEEDLE BR10120H (60380)	B	EA	4				•	•	•	•	•	79	25
PAHZZ		PIN, DOWEL: CASE H18810-4 (41625)	B	EA	8				•	•	•	•	•	79	26
XAHZZ		CASE, ENGINE UNIT E18232 (41625)	B	EA	2									79	27
PBFZZ	2810-391-8618	DISCONNECT: PILOT HOUSE KIT D19250 (41625)	B	EA	2	•	•	•	•	•	•	•	•	80	
PAFZZ	4030-770-6105	CLAMP, WIRE ROPE D19250-5 (41625)	B	EA	8	•	•	•	•	•	•	•	•	80	1
PAFZZ	3020-231-8734	LINK, ROLLER, CHAIN, CONNECTING D19250-3 (41625)	B	EA	4	•	•	•	•	•	•	•	•	80	2
PAFZZ		THIMBLE, WIRE ROPE D19250-4 (41625)	B	EA	4	•	•	•	•	•	•	•	•	80	3
PAFZZ		PIN, COTTER: TURNBUCKLE END, 3/32 IN. DIA, 1 1/4 IN. LG MS24665-132 (96906)	B	EA	2	•	•	•	•	•	•	•	•	80	4
PAFZZ	5340-770-0069	TURNBUCKLE, CHAIN CONNECTING B18652 (41625)	B	EA	4	•	•	•	•	•	•	•	•	80	5
XAFZZ		END, TURNBUCKLE: CHAIN CONNECTING A18640 (41625)	B	EA	4									80	6
XAFZZ		TURNBUCKLE, RINGING B18652-2 (41625)	B	EA	4									80	7
WFZZ		CHAIN, ROLLER: ASA NO. 40, 1/2 IN. PITCH D19250-2 (41625) MANUFACTURE FROM:	B	EA	1									80	8
PAFZZ	3020-196-0803	CHAIN, AS REQUIRED 421CHAIN40-1RCA (96906)		FT		•	•	•	•	•	•	•		80	9
XEHZZ		DISCONNECT ASSEMBLY, PILOT HOUSE D18410 (41625)	B	EA	2									80	10
PAFZZ	5310-732-0558	NUT, PLAIN, HEXAGON: KNOB MTG, 3/8-16 THD SIZE MS51967-8 (96906)	B	EA	2	•	•	•	•	•	•	•	•		

(1) SMR CODE	(2) FEDERAL STOCK NUMBER	(3) DESCRIPTION REF NUMBER & MFR CODE	USABLE ON CODE	(4) UNIT OF MEAS	(5) QTY INC IN UNIT	(6) 20-DAY DS MAINT ALLOWANCE (a) 1-20	(b) 21-50	(c) 51-100	(7) 20-DAY GS MAINT ALLOWANCE (a) 1-20	(b) 21-50	(c) 51-100	(8) 1-YR ALW PER 100 EQUIP CNTGY	(9) DEPOT MAINT ALW PER 100 EQUIP	(10) ILLUSTRATION (a) FIG. NO.	(b) ITEM NO.
PAFZZ	5310-637-9541	WASHER, LOCK: KNOB MTG, 8 IN. SCREW SIZE MS35338-46 (96906)	B	EA	2	•	•	•	•	•	•	•	•	80	11
XDFZZ		KNOB, PILOT HOUSE, DISCONNECT A18405 (41625)	B	EA	2									80	12
XDFZZ		SPRING, COMPRESSION A18404 (41625)	B	EA	2									80	13
PAFZZ		SETSCREW: ADAPTER, SLOTTED HD, 5/16-18 THD SIZE, 1/2 IN. LG D18410-6 (41625)	B	EA	2	•	•	•	•	•	•	•	•	80	14
XDFZZ		PIN, PILOT HOUSE, DISCONNECT A18406 (41625)	B	EA	2									80	15
PAOZZ	4730-172-0049	FITTING, LUBRICATION: ADAPTER 1650 (95079)		EA	2	•	•	•	•	•	•	•	•	80	16
PAFZZ		SETSCREW: ADAPTER, SLOTTED HD, 5/16-18 THD SIZE, 1/2 IN. LG D18410-5 (41625)	B	EA	2	•	•	•	•	•	•	•	•	80	17
XDHZZ		ADAPTER D18409 (41625)	B	EA	2									80	18
XDHZZ		KEY, MACHINE: ADAPTER, 1/4 X 1/4 X 1 1/2 IN. A18403 (41625)	B	EA	2									80	19
XDHZZ		SPROCKET, PILOT HOUSE B18407 (41625)	B	EA	2									80	20
PAFZZ		SETSCREW: PLATE, 1/4-20 THD SIZE, 3/8 IN. LG D18410-4 (41625)	B	EA	4	•	•	•	•	•	•	•	•	80	21
XDHZZ		PLATE, PILOT HOUSE, DISCONNECT D18408 (41625)	B	EA	2									80	22
PBFZZ	2010-591-8621	BRAKE ASSEMBLY, FREE WHEELING D18700 (41625)	B	EA	2	•	•	•	•	•	•	•	•	81	
PAFZZ	5315-852-2336	PIN, COTTER: LINK, 3/32 IN. DIA, 3/4 IN. LG MS9245-45 (96906)	B	EA	4	•	•	•	•	•	•	•	•	81	1
XDHZZ		PIN, LINKAGE, CONNECTING A18708 (41625)	B	EA	2									81	2
PAFZZ	5310-732-0559	NUT, PLAIN, HEXAGON: BRAKE ASSEMBLY MTG, 3/8-24 THD SIZE MS51968-8 (96906)	B	EA	10	•	•	•	•	•	•	•	•	81	3
PAFZZ	5310-637-9541	WASHER, LOCK: BRAKE ASSEMBLY MTG, 3/8 IN. SCREW SIZE MS35338-46 (96906)	B	EA	10	•	•	•	•	•	•	•	•	81	4
PAFZZ	5305-269-2805	SCREW, CAP, HEXAGON HEAD: BRAKE ASSEMBLY MTG, 3/8-24 THD SIZE, 1 1/4 IN. LG MS90726-62 (96906)	B	EA	8	•	•	•	•	•	•	•	•	81	5
PAHZZ	5310-732-0559	NUT, PLAIN, HEXAGON: ROD, 3/8-24 THD SIZE MS51968-8 (96906)	B	EA	2	•	•	•	•	•	•	•	•	81	6
PAHZZ	5310-637-9541	WASHER, LOCK: ROD, 3/8 IN. SCREW SIZE MS35338-46 (96906)	B	EA	2				•	•	•	•	•	81	7
XDHZZ		ROD, PULL A18696 (41625)	B	EA	2									81	8
PAHZZ	3120-592-0393	BUSHING, GUIDE BRAKE A18694 (41625)	B	EA	2				•	•	•	•	•	81	9

(1) Rmd Code	(2) Federal Stock Number	(3) DESCRIPTION Ref Number & MFR Code	Usable On Code	(4) Unit of Meas	(5) Qty Inc in Unit	(6) 30-Day DS Maint Allowance (a) 1-20	(b) 21-50	(c) 51-100	(7) 30-Day GS Maint Allowance (a) 1-20	(b) 21-50	(c) 51-100	(8) 1-Yr Alw Per 100 Equip Cntgy	(9) Depot Maint Alw Per 100 Equip	(10) Illustration (a) Fig. No.	(b) Item No.
PAHZZ	5340-772-0410	SPRING, COMPRESSION, BRAKE A18709 (41625)	B	EA	2				•	•	•	•	•	81	10
XAHZZ		PLATE ASSEMBLY, THRUST: BRAKE A18710 (41625)	B	EA	2									81	11
PAHZZ	5310-880-7746	NUT, PLAIN, HEXAGON: SUPPORT PLATE MTG, 5/16-24 THD SIZE MS51968-5 (96906)	B	EA	4				•	•	•	•	•	81	12
PAHZZ	5310-407-9566	WASHER, LOCK: SUPPORT PLATE MTG, 5/16 IN. SCREW SIZE MS35338-45 (96906)	B	EA	4				•	•	•	•	•	81	13
PAHZZ	5310-880-7746	NUT, PLAIN, HEXAGON: PLATE, 5/16-24 THD SIZE MS51968-5 (96906)		EA	2				•	•	•	•	•	81	14
PAHZZ	5310-407-9566	WASHER, LOCK: PLATE, 5/16 IN. SCREW SIZE MS35338-45 (96906)		EA	2				•	•	•	•	•	81	15
XDHZZ		PLATE, SUPPORT A18701 (41625)	B	EA	2									81	16
XAHZZ		SHAFT, BRAKE A18697 (41625)	B	EA	2									81	17
XAHZZ		ARM, BRAKE A17445 (41625)	B	EA	4									81	18
R PAHZZ	5310-589-1403	DISK, FRICTION, BRAKE A17444 (41625)	B	EA	6				•	•	•	•	•	81	19
XAHZZ		ROTOR ASSEMBLY: BRAKE D18711 (41625)	B	EA	3									81	20
PAHZZ	5310-589-1403	DISK, FRICTION, BRAKE A17444 (41625)	B	EA	2				•	•	•	•	•	81	21
XAHZZ		ARM, BRAKE A17445 (41625)	B	EA	1									81	22
PCHZZ	5330-256-0195	PACKING, PREFORMED: O RING AN6230-9 (88044)	B	EA	2				•	•	•	•	•	81	23
XAHZZ		ROTOR ASSEMBLY, BRAKE D8711 (41625)	B	EA	1									81	24
XDHZZ		PIN, SUPPORT BRAKE A18695 (41625)	B	EA	6									81	25
PCHZZ	5330-256-0195	PACKING, PREFORMED: O RING AN6230-9 (88044)	B	EA	2				•	•	•	•	•	81	26
XAHZZ		ARM, BRAKE A17445 (41625)	B	EA	4									81	27
PAHZZ		SETSCREW: BASE, SOCKET HD, CUP POINT, 5/16-18 THD SIZE, 1/2 IN. LG D18700-8 (41625)	B	EA	4				•	•	•	•	•	81	28
XAHZZ		BASE, FREEWHEELING BRAKE E18691 (41625)	B	EA	2									81	29
PBFZZ	2810-598-0850	ELBOW ASSEMBLY, MARINE CONTROL E18199 (41625)	B	EA	6	•	•	•	•	•	•	•	•	82	
PAHZZ		SCREW, MACHINE: COVER MTG, FILLISTER HD, 1/4-20 THD SIZE, 1 1/2 IN. LG E18199-2 (41625)	B	EA	36				•	•	•	•	•	82	1
PCHZZ	5330-598-0451	WASHER, SEALING: COVER MTG, 1/4 IN. SCREW SIZE A18400 (41625)	B	EA	36				•	•	•	•	•	82	2
XAHZZ		COVER, ELBOW D18176 (41625)	B	EA	6									82	3

(1) SMR CODE	(2) FEDERAL STOCK NUMBER	(3) DESCRIPTION REF NUMBER & MFR CODE	USABLE ON CODE	(4) UNIT OF MEAS	(5) QTY INC IN UNIT	(6) 30-DAY DS MAINT ALLOWANCE (a) 1-20	(b) 21-50	(c) 51-100	(7) 30-DAY GS MAINT ALLOWANCE (a) 1-20	(b) 21-50	(c) 51-100	(8) 1-YR ALW PER 100 EQUIP CNTGY	(9) DEPOT MAINT ALW PER 100 EQUIP	(10) ILLUSTRATION (a) FIG. NO.	(b) ITEM NO.
PCHZZ	5330-732-0455	GASKET: ELBOW B18197 (81625)	B	EA	6				•	•	•	•	•	82	4
PAHZZ		SCREW, MACHINE: RD HD, 1/4-20 THD SIZE, 1 1/2 IN. LG E18199-3 (81625)	B	EA	12				•	•	•	•	•	82	5
PCHZZ	5330-732-0451	WASHER, SEALING: BODY, 1/4 IN. SCREW SIZE A18400 (81625)	B	EA	12				•	•	•	•	•	82	6
PAHZZ	5310-732-0559	NUT, PLAIN, HEXAGON: PULLEY MTG, 3/8-24 THD SIZE MS51968-8 (96906)	B	EA	6				•	•	•	•	•	82	7
PAHZZ	5306-458-2097	BOLT, MACHINE: PULLEY MTG, 3/8-24 THD SIZE, 2 IN. LG E18199-4 (81625)	B	EA	6				•	•	•	•	•	82	8
XAHZZ		PULLEY, GROOVE E18199-6 (81625)	B	EA	12									82	9
XAHZZ		BODY, ELBOW E18144 (81625)	B	EA	6									82	10
XDHZZ		HANGER ASSEMBLY, DOUBLE PIPE B19359 (81625)	B	EA	6										
XDHZZ		HANGER ASSEMBLY, SINGLE PIPE B19357 (81625)	B	EA	6										
XDHZZ		SPACER ASSEMBLY, PILOT HOUSE, TERMINAL B18938 (81625)	B	EA	2										
PAFZZ	2010-732-0285	CABLE ASSEMBLY, SHUT-OFF B37680-2 (81625)	B	EA	4	•	•	•	•	•	•	•	•		

(1) SMR CODE	(2) FEDERAL STOCK NUMBER	(3) DESCRIPTION REF NUMBER & MFR CODE	USABLE ON CODE	(4) UNIT OF MEAS	(5) QTY INC IN UNIT	(6) 30-DAY DS MAINT ALLOWANCE (a) 1-20	(b) 21-50	(c) 51-100	(7) 30-DAY GS MAINT ALLOWANCE (a) 1-20	(b) 21-50	(c) 51-100	(8) 1-YR ALW PER 100 EQUIP CNTGY	(9) DEPOT MAINT ALW PER 100 EQUIP	(10) ILLUSTRATION (a) FIG. NO.	(b) ITEM NO.
PBFHH	2990-477-6118	CONTROL, PILOT HOUSE AN6106-3 (81625)	A	EA	2	*	*	*	*	*	*	*	*	83	
PAFZZ		SCREW, FILLISTER HEAD: CONTROL LEVER, 5/16-18 THD SIZE, 5/8 IN. LG	A	EA	1	*	*	*	*	*	*	*	*	83	1
PAFZZ	5310-407-9566	WASHER, LOCK CONTROL LEVER, 5/16 IN. SCREW SIZE MS35338-45 (96906)	A	EA	1	*	*	*	*	*	*	*	*	83	2
XDFZZ		LEVER, IDLE B37708 (81625)	A	EA	1									83	3
PAHZZ	2990-221-8817	BEARING, NYLON A32786 (81625)	A	EA	1				*	*	*	*	*	83	4
XDOZZ		SCREW, MACHINE: IDENTIFICATION PLATE, NO. 6-32 THD SIZE, 1/4 IN. LG	A	EA	2									83	5
XDOZZ		PLATE, IDENTIFICATION B13251 (81625)	A	EA	1									83	6
XDOZZ		PLUG, PIPE: HOUSING H39A00-61 (81625)	A	EA	1									83	7
PAFZZ		SCREW, FILLISTER HEAD: LEVER MTG, 5/16-18 THD SIZE, 3 1/2 IN. LG	A	EA	1	*	*	*	*	*	*	*	*	83	8
PAFZZ	5310-407-9566	WASHER, LOCK: LEVER MTG, 5/16 IN. SCREW SIZE MS35338-45 (96906)	A	EA	1	*	*	*	*	*	*	*	*	83	9
XDFZZ		LEVER, HAND B40040 (81625)	A	EA	1									83	10
XDOZZ		KNOB A29106 (81625)	A	EA	1									83	11
PAHZZ		SCREW, FILLISTER HEAD: HOUSING MTG, 1/4-20 THD SIZE, 1 7/8 IN. LG	A	EA	2				*	*	*	*	*	83	12
PAHZZ	5310-582-5965	WASHER, LOCK: HOUSING MTG, INTERNAL TOOTH, 1/4 IN. SCREW SIZE MS35338-44 (96906)	A	EA	2				*	*	*	*	*	83	13
PAHZZ	5305-068-0501	SCREW, MACHINE: HOUSING MTG, 1/4-20 THD SIZE, 5/8 IN. LG MS90725-5 (96906)	A	EA	2				*	*	*	*	*	83	14
XAHZZ		HOUSING E39092 (81625)	A	EA	1									83	15
PCFZZ	5330-458-2054	SEAL A37850 (81625)	A	EA	1	*	*	*	*	*	*	*	*	83	16
XDHZZ		PLUG, DETENT A32040 (81625)	A	EA	1									83	17
PAHZZ		SPRING: DETENT BALL A39501 (81625)	A	EA	1				*	*	*	*	*	83	18
PAHZZ		BALL, STEEL: 3/8 IN. DIA H39A00-51 (81625)	A	EA	1				*	*	*	*	*	83	19
PAHZZ		PLUG, DETENT A32040 (81625)	A	EA	1	*	*	*	*	*	*	*	*	83	20
PAHZZ		SPRING: BRAKE A39502 (81625)	A	EA	1				*	*	*	*	*	83	21
XDHZZ		BRAKE, PLUG A39267 (81625)	A	EA	1									83	22
PAHZZ		SCREW, FILLISTER HEAD: SUPPORT MTG, 1/4-20 THD SIZE, 1/2 IN. LG	A	EA	4				*	*	*	*	*	83	23

(1) SMR CODE	(2) FEDERAL STOCK NUMBER	(3) DESCRIPTION REF NUMBER & MFR CODE	USABLE ON CODE	(4) UNIT OF MEAS	(5) QTY INC IN UNIT	(6) 30-DAY DS MAINT ALLOWANCE (a) 1-20	(b) 21-50	(c) 51-100	(7) 30-DAY GS MAINT ALLOWANCE (a) 1-20	(b) 21-50	(c) 51-100	(8) 1-YR ALW PER 100 EQUIP CNTGY	(9) DEPOT MAINT ALW PER 100 EQUIP	(10) ILLUSTRATION (a) FIG. NO.	(b) ITEM NO.
PAHZZ	5310-582-5965	WASHER, LOCK: SUPPORT MTG, 1/4 IN. SCREW SIZE MS35338-44 (96906)	A	EA	4				*	*	*	*	*	83	24
PAHZZ	5310-929-1807	NUT, SELF-LOCKING: 1/4-20 THD SIZE MS51922-22 (96906)	A	EA	1				*	*	*	*	*	83	25
XDHZZ		SPACER: COLLAR BUSHING A36358 (81625)	A	EA	1									83	26
PAHZZ	5306-796-1669	BOLT, PIVOT, SPECIAL A37848 (81625)	A	EA	1				*	*	*	*	*	83	27
XDHZZ		SUPPORT D37847 (81625)	A	EA	1									83	28
PAHZZ	5305-939-9187	SCREW, FILLISTER HEAD: CABLE CLAMP, NO. 10-24 THD SIZE, 13/32 IN. LG MS35275-262 (96906)	A	EA	4				*	*	*	*	*	83	29
XDHZZ		CLAMP, CABLE A40028 (81625)	A	EA	1									83	30
XDHZZ		BRACKET, SWIVEL B37846 (81625)	A	EA	1									83	31
PAHZZ	5315-234-1864	PIN, COTTER: 3/32 IN. DIA, 1 IN. LG MS24665-302 (96906)	A	EA	1				*	*	*	*	*	83	32
XDHZZ		WASHER, SPECIAL A39268 (81625)	A	EA	1									83	33
PAHZZ	3120-793-6354	BEARING, NYLON H39400-47 (81625)	A	EA	1	*	*	*	*	*	*	*	*	83	34
XDHZZ		CRANK, IDLE B37710 (81625)	A	EA	1									83	35
XDHZZ		WASHER, SPRING A32198 (81625)	A	EA	1									83	36
PAHZZ	5305-050-9229	SCREW, MACHINE: DETENT BLOCK NO. 10-24 THD SIZE, 1/2 IN. LG MS51957-63 (96906)	A	EA	1				*	*	*	*	*	83	37
PAHZZ	5310-045-3296	WASHER, LOCK: DETENT BLOCK, INTERNAL TOOTH, NO. 10 SCREW SIZE MS35338-43 (96906)	A	EA	1				*	*	*	*	*	83	38
XDHZZ		RETAINER A39405 (81625)	A	EA	1									83	39
PAHZZ	5360-176-0630	SPRING, DETENT BLOCK A43801 (81625)	A	EA	1				*	*	*	*	*	83	40
XDHZZ		BLOCK, DETENT A43799 (81625)	A	EA	1									83	41
PAHZZ	5315-852-2336	PIN, COTTER: CABLE TERMINAL, 3/32 IN. DIA, 3/4 IN. LG MS9245-45 (96906)	A	EA	1				*	*	*	*	*	83	42
XDFZZ		TERMINAL, CABLE A39264 (81625)	A	EA	1									83	43
PAHZZ	5305-810-5543	SCREW, FILLISTER HEAD: THROTTLE ARM, NO. 10-24 THD SIZE, 1 IN. LG MS35265-67 (96906)	A	EA	2				*	*	*	*	*	83	44
PAHZZ	5310-045-3296	WASHER, LOCK: THROTTLE ARM, INTERNAL TOOTH, NO. 10 SCREW SIZE MS35338-43 (96906)	A	EA	2				*	*	*	*	*	83	45

(1) SMR CODE	(2) FEDERAL STOCK NUMBER	(3) DESCRIPTION — REF NUMBER & MFR CODE	USABLE ON CODE	(4) UNIT OF MEAS	(5) QTY INC IN UNIT	(6) 30-DAY BS MAINT ALLOWANCE (a) 1-20	(b) 21-99	(c) 31-100	(7) 30-DAY GS MAINT ALLOWANCE (a) 1-20	(b) 21-99	(c) 31-100	(8) 1-YR ALW PER 100 EQUIP CNTGY	(9) DEPOT MAINT ALW PER 100 EQUIP	(10) ILLUSTRATION (a) FIG. NO.	(b) ITEM NO.
XAHZZ		ARM, THROTTLE B39359 (41625)	A	EA	1									83	46
PAHZZ		RING, RETAINING: TYPE E, 5/16 IN. H39400-45 (41625)	A	EA	1				•	•	•	•	•	83	47
PAHZZ	2990-477-6120	ROLLER, THROTTLE ARM A38504 (41625)	A	EA	1				•	•	•	•	•	83	48
XDHZZ		LINK B37842 (41625)	A	EA	1									83	49
XDHZZ		SPROCKET D37770 (41625)	A	EA	1									83	50
PAHZZ	2990-221-8817	BEARING, NYLON: SPROCKET A32766 (41625)	A	EA	2				•	•	•	•	•	83	51
XDHZZ		NUT, SELF-LOCKING: CLUTCH ARM A39400-44 (41625)	A	EA	1									83	52
XDHZZ		SCREW, CAP, HEXAGON HEAD: CLUTCH ARM	A	EA	1									83	53
PAHZZ	5310-458-2124	WASHER, SPECIAL: CLUTCH ARM A39389 (41625)	A	EA	1				•	•	•	•	•	83	54
PAHZZ	5315-852-2336	PIN, COTTER: CABLE TERMINAL, 3/32 IN. DIA, 3/4 IN. LG MS9245-45 (96906)	A	EA	1				•	•	•	•	•	83	55
XDHZZ		TERMINAL, CABLE A39264 (41625)		EA	1									83	56
XAHZZ		ARM, CLUTCH B39366 (41625)	A	EA	1									83	57
PAHZZ	3120-889-8567	BEARING, NYLON H39400-46 (41625)	A	EA	1				•	•	•	•	•	83	58
PAHZZ	5305-939-9187	SCREW, FILLISTER HEAD: CABLE CLAMP, NO. 10-24 THD SIZE, 13/32 IN. LG MS35275-262 (96906)	A	EA	4				•	•	•	•	•	83	59
XDHZZ		CLAMP, CABLE A40028 (41625)	A	EA	1									83	60
XAHZZ		SUPPORT, MECHANISM E37707 (41625)	A	EA	1									83	61
N PBFZZ	2910-922-0347	CONTROL, STATION PORT: W/INTERLOCK A2750BLH (86376) (COMPONENTS SAME AS CONTROL, FSN 2910-922-0348)	C	EA	1	•	•	•	•	•	•	•	•	84	
N PBFZZ	2910-922-0348	CONTROL, STATION STARBOARD: W/INTERLOCK A2750BRH (86376)	C	EA	1	•	•	•	•	•	•	•	•	84	
N PAFZZ	5305-005-0845	SCREW, BRACKET MOUNTING 261 (86376)	C	EA	8	•	•	•	•	•	•	•	•	84	1
N PAFZZ	5310-930-3948	WASHER, LOCK, CLAMP: 3/16 IN. ID 10211178-3 (18876)	C	EA	8	•	•	•	•	•	•	•	•	84	2
N XDOZZ		KNOB, BLACK 1144 (86376)	C	EA	2									84	3
N XDOZZ		KNOB, RED 1145 (86376)	C	EA	2									84	4
N PAFZZ	5305-005-0850	SCREW, COVER 1217 (86376)	C	EA	4	•	•	•	•	•	•	•	•	84	5
N XDFZZ		COVER, POSITROL 1153 (86376)	C	EA	2									84	6
N PAFZZ	5315-187-9370	PIN, COTTER, SWIVEL MS24665-172 (96906)	C	EA	4	•	•	•	•	•	•	•	•	84	7

(1) SMR CODE	(2) FEDERAL STOCK NUMBER	(3) DESCRIPTION REF NUMBER & MFR CODE	USABLE ON CODE	(4) UNIT OF MEAS	(5) QTY INC IN UNIT	(6) 30-DAY DS MAINT ALLOWANCE (a) 1-20	(b) 21-50	(c) 51-100	(7) 30-DAY GS MAINT ALLOWANCE (a) 1-20	(b) 21-50	(c) 51-100	(8) 1-YR ALW PER 100 EQUIP CNTGY	(9) DEPOT MAINT ALW PER 100 EQUIP	(10) ILLUSTRATION (a) FIG. NO.	(b) ITEM NO.
N XDFZZ		WASHER, SWIVEL JOINT 1386 (86376)	C	EA	4									84	8
N PAFZZ	5310-005-8135	NUT, LOCK, CABLE END 1128 (86376)	C	EA	8	*	*	*	*	*	*	*	*	84	9
N PAFZZ	3040-887-9939	JOINT, SWIVEL 2189 (86376)	C	EA	4	*	*	*	*	*	*	*	*	84	10
N PAFZZ	5310-003-1787	NUT, CLAMP 2392 (86376)	C	EA	16	*	*	*	*	*	*	*	*	84	11
N PAFZZ	5310-930-3948	WASHER, LOCK, CLAMP: 3/16 IN. ID 10211178-3 (18876)		EA	2	*	*	*	*	*	*	*	*	84	12
N PAFZZ	5305-005-6042	SCREW, CLAMP CABLE 2391 (86376)	C	EA	16	*	*	*	*	*	*	*	*	84	13
N XDFZZ		CLAMP, CABLE SECURING 2213 (86376)	C	EA	4									84	14
N PAFZZ	5315-982-6306	PIN, ROLL 2168 (86376)	C	EA	4	*	*	*	*	*	*	*	*	84	15
N PAOZZ	5307-982-8935	STUD, HANDLE 1160 (86376)	C	EA	4	*	*	*	*	*	*	*	*	84	16
N XDFZZ		HANDLE, THROTTLE 2186 (86376)	C	EA	2									84	17
N XDFZZ		HANDLE, CLUTCH 2187 (86376)	C	EA	2									84	18
N PAFZZ	3120-005-5796	BEARING, HANDLE 2164 (86376)	C	EA	4	*	*	*	*	*	*	*	*	84	19
N XDFZZ		HOUSING, POSITROL BASE 2157 (86376)	C	EA	2									84	20
N PAFZZ	5315-982-4297	PIN, STOP 1751 (86376)	C	EA	2	*	*	*	*	*	*	*	*	84	21
N XAFZZ		THROTTLE, QUADRANT 2163 (86376)	C	EA	2									84	22
N XDFZZ		PIN, INTERLOCK 2167 (86376)	C	EA	2									84	23
N PAFZZ	5360-926-0117	SPRING, INTERLOCK 2166 (86376)	C	EA	2	*	*	*	*	*	*	*	*	84	24
N PAFZZ	3010-437-1792	CLUTCH, QUADRANT 2162 (86376)	C	EA	2	*	*	*	*	*	*	*	*	84	25
N XDFZZ		BRACKET, CABLE LEAD 2161 (86376)	C	EA	2									84	26
N XDFZZ		SCREW, SWITCH MOUNTING 2768 (86376)	C	EA	4									84	27
N PAFZZ	5305-005-6037	SCREW, CAM MOUNTING 2767 (86376)	C	EA	4	*	*	*	*	*	*	*	*	84	28
N PAFZZ	5365-003-4116	BUSHING, SWITCH 2765 (86376)	C	EA	4	*	*	*	*	*	*	*	*	84	29
N XDFZZ		STRIP: 2 POLE TERMINAL 2769 (86376)	C	EA	2									84	30
PAFZZ	5305-005-8854	SCREW, MACHINE: NO. 8-32 THD SIZE, 1/2 IN. LG 534 (86376)		EA	1	*	*	*	*	*	*	*	*	84	31
N PAFZZ	5310-576-0546	WASHER, LOCK: NO. 8 MS35338-99 (96906)	C	EA	4	*	*	*	*	*	*	*	*	84	32
N PAFZZ	5310-184-8977	WASHER, LOCK: NO. 6 MS35338-98 (96906)	C	EA	2	*	*	*	*	*	*	*	*	84	33

	(1) SMR CODE	(2) FEDERAL STOCK NUMBER	(3) DESCRIPTION REF NUMBER & MFR CODE	USABLE ON CODE	(4) UNIT OF MEAS	(5) QTY INC IN UNIT	(6) 30-DAY DS MAINT ALLOWANCE (a) 1-20	(b) 21-50	(c) 51-100	(7) 30-DAY GS MAINT ALLOWANCE (a) 1-20	(b) 21-50	(c) 51-100	(8) 1-YR ALW PER 100 EQUIP CNTGY	(9) DEPOT MAINT ALW PER 100 EQUIP	(10) ILLUSTRATION (a) FIG. NO.	(b) ITEM NO.
N	PAFZZ	5930-931-5402	SWITCH, CONTROL 599 (86376)	C	EA	2	*	*	*	*	*	*	*	*	84	34
N	PAFZZ	3040-922-0272	CAM, SWITCH 2766 (86376)	C	EA	4	*	*	*	*	*	*	*	*	84	35
N	PAFZZ	3040-881-0258	THROTTLE BRAKE ASSEMBLY 2199 (86376)	C	EA	2	*	*	*	*	*	*	*	*	84	36
N	PAFZZ	5305-005-0840	SCREW, ADJUSTING BRAKE 2371 (86376)	C	EA	1	*	*	*	*	*	*	*	*	84	37
N	XAFZZ		SHOE BRAKE: W/TAPPED HOLE 2188 (86376)	C	EA	2									84	38
N	PAFZZ	3040-881-0419	BRAKE, LEATHER 2198 (86376)	C	EA	2	*	*	*	*	*	*	*	*	84	39
N	XAFZZ		BRAKE, SHOE 2201 (86376)	C	EA	2									84	40
N	XDFZZ		CONTROL UNIT: ENGINE THROTTLE A1583400 (86376)	C	EA	4									85	
N	XDFZZ		KNOB, RED, CLUTCH 1852 (86376)	C	EA	1									85	1
N	XDFZZ		KNOB, BLACK, THROTTLE 1752 (86376)	C	EA	1									85	2
N	PAFZZ	5310-005-8135	NUT, BALL JOINT 1128 (86376)	C	EA	1	*	*	*	*	*	*	*	*	85	3
N	PAFZZ	5310-933-8122	WASHER, LOCK: BALL JOINT 127 (86376)		EA	1	*	*	*	*	*	*	*	*	85	4
N	XDFZZ		JOINT, BALL 1725G (86376)	C	EA	1									85	5
N	XDFZZ		LEVER, MANUAL CONTROL 1502 (86376)	C	EA	1									85	6
N	XDHZZ		SCREW, CLAMP BRACKET 126 (86376)	C	EA	3									85	7
N	PAFZZ	5310-933-8122	WASHER, LOCK: 5/16 IN. BRACKET NUT MS35338-159 (96906)	C	EA	3	*	*	*	*	*	*	*	*	85	8
N	PAFZZ	5360-982-7723	SPRING, LOCK BOLT 667 (86376)	C	EA	1	*	*	*	*	*	*	*	*	85	9
N	XDFZZ		PIN, CROSS: DISCONNECT PIN 1218 (86376)	C	EA	1									85	10
N	PAFZZ	5355-003-0718	KNOB, LOCK PIN 1512 (86376)	C	EA	1	*	*	*	*	*	*	*	*	85	11
N	PAFZZ	5315-982-1287	PIN, KNOB: DISCONNECT PIN 1369 (86376)	C	EA	1	*	*	*	*	*	*	*	*	85	12
N	PAFZZ	5315-982-1295	PIN, LOCK: CONTROL LEVER 1513 (86376)	C	EA	1	*	*	*	*	*	*	*	*	85	13
N	PAFZZ	5315-981-1618	PIN, SHAFT RETAINING 2519 (86376)	C	EA	1	*	*	*	*	*	*	*	*	85	14
N	PAFZZ		BEARING, SHAFT: CONTROL LEVER 1563 (86376)	C	EA	2	*	*	*	*	*	*	*	*	85	15
N	PAFZZ	3040-881-0420	SHAFT, CONTROL LEVER 1614 (86376)	C	EA	1	*	*	*	*	*	*	*	*	85	16
N	PAFZZ	3040-888-0583	LEVER, REMOTE CONTROL 1501 (86376)	C	EA	1	*	*	*	*	*	*	*	*	85	17
N	XDFZZ		SCREW, CLAMP 126 (83676)	C	EA	1									85	18

	(1) SMR CODE	(2) FEDERAL STOCK NUMBER	(3) DESCRIPTION REF NUMBER & MFR CODE	USABLE ON CODE	(4) UNIT OF MEAS	(5) QTY INC IN UNIT	(6) 30-DAY DS MAINT ALLOWANCE (a) 1-30	(b) 31-99	(c) 31-100	(7) 30-DAY GS MAINT ALLOWANCE (a) 1-30	(b) 31-99	(c) 31-100	(8) 1-YR ALW PER 100 EQUIP ENTRY	(9) DEPOT MAINT ALW PER 100 EQUIP	(10) ILLUSTRATION (a) FIG NO.	(b) ITEM NO.
N	XDFZZ		CLAMP, CABLE SECURING 2213 (86376)	C	EA	1									85	19
N	PAFZZ	5305-005-0853	SCREW, CLAMP 133 (86376)	C	EA	1	*	*	*	*	*	*	*	*	85	20
N	XDFZZ		BRACKET, CABLE CLAMP 2323 (86376)	C	EA	1									85	21
N	PAFZZ		SCREW: LEVER 126 (83676)	C	EA	1	*	*	*	*	*	*	*	*	85	22
	PAFZZ	5310-933-8122	WASHER, LOCK: LEVER 127 (86376)	C	EA	1	*	*	*	*	*	*	*	*	85	23
	PAFZZ		SCREW: LEVER 126 (86376)	C	EA	1	*	*	*	*	*	*	*	*	85	24
N	XDFZZ		BRACKET, MAIN ENGINE CONTROL 1504 (86376)	C	EA	1									85	25
	PAFZZ		NUT, LOCK: ARTICULATOR 541 (86376)		EA	1	*	*	*	*	*	*	*	*	85	26
N	XDFZZ		NUT, LOCK 541 (86376)	C	EA	2									85	27
N	XDFZZ		LEVER, ENGINE CONTROL 1506 (86376)	C	EA	1									85	28
N	PAFZZ	5310-005-8136	LOCKNUT, LEVER SETSCREW 271 (86376)	C	EA	1	*	*	*	*	*	*	*	*	85	29
N	PAFZZ	5305-005-0847	SCREW, SET: LEVER 1103 (86376)	C	EA	1	*	*	*	*	*	*	*	*	85	30
N	XDFZZ		NUT, CABLE CLAMP 2392 (86376)	C	EA	2									85	
N	XDFZZ		SCREW, CABLE CLAMP 2391 (86376)	C	EA	2									85	
N	PAFZZ	2910-922-0274	HEAD, AIR AND FUEL SHUTDOWN C2707 (86376)	C	EA	8	*	*	*	*	*	*	*	*	86	
N	PAFZZ	5310-004-5157	NUT, CLAMP, CABLE 242 (86376)	C	EA	8	*	*	*	*	*	*	*	*	86	1
N	PAFZZ	5305-005-0848	SCREW, CLAMP, CABLE 1211 (86376)	C	EA	8	*	*	*	*	*	*	*	*	86	2
N	PAFZZ		CLAMP, CABLE HOUSING 1776 (86376)	C	EA	8	*	*	*	*	*	*	*	*	86	3
N	XDFZZ		HANDLE-T, CABLE 2136 (86376)	C	EA	8									86	4
N	PAFZZ	5310-005-8135	NUT, LOCK, CABLE END 1128 (86376)	C	EA	8	*	*	*	*	*	*	*	*	86	5
N	PAFZZ	3120-003-9416	BUSHING, GUIDE, CABLE END 1712 (86376)	C	EA	8	*	*	*	*	*	*	*	*	86	6
N	XAFZZ		TUBE, CABLE MOUNT 2771 (86376)	C	EA	1									86	7
N	PAFZZ	4730-908-3194	CLAMP MS35842-11 (96906)	C	EA	4	*	*	*	*	*	*	*	*	87	1
N	PAFZZ	5975-985-6570	STRAP, PLASTIC TIE TY27M (59730)	C	EA	20	*	*	*	*	*	*	*	*	87	2
N	MFFZZ		LINER, NEOPRENE 245-4510949-59 (80046) MANUFACTURE FROM:	C	EA	4									87	3
N	PAFZZ	5330-202-4061	GASKET, RUBBER, 1/8 IN., AS REQUIRED MILR3065GRADE614-4ABEF (81349)		SH		*	*	*	*	*	*			87	

(1) SMR CODE	(2) FEDERAL STOCK NUMBER	(3) DESCRIPTION REF NUMBER & MFR CODE	USABLE ON CODE	(4) UNIT OF MEAS	(5) QTY INC IN UNIT	(6) 30-DAY DS MAINT ALLOWANCE (a) 1-20	(b) 21-50	(c) 51-100	(7) 30-DAY GS MAINT ALLOWANCE (a) 1-20	(b) 21-50	(c) 51-100	(8) 1-YR ALW PER 100 EQUIP CNTGY	(9) DEPOT MAINT ALW PER 100 EQUIP	(10) ILLUSTRATION (a) FIG. NO.	(b) ITEM NO.
N PAFZZ	5330-505-6611	GASKET, RUBBER, 1/16 IN. THK, AS REQUIRED MILR3065GRADE614-4ABEF (81349)		SH		*	*	*	*	*	*			87	
N PAFZZ	3010-937-1843	CABLE, CLUTCH B2260-15 (86376)	C	EA	1	*	*	*	*	*	*	*	*	87	4
N PAFZZ	2910-922-0349	CABLE, THROTTLE B2260-13 (86376)	C	EA	1	*	*	*	*	*	*	*	*	87	5
N PAFZZ	2910-922-0350	CABLE, THROTTLE B2260-9 (86376)	C	EA	1	*	*	*	*	*	*	*	*	87	6
N PAFZZ	3010-937-1869	CABLE, CLUTCH B2260-10 (86376)	C	EA	1	*	*	*	*	*	*	*	*	87	7
N PAFZZ	5310-061-7325	NUT, SELF-LOCK MS21045-4 (96906)	C	EA	4	*	*	*	*	*	*	*	*	87	8
N PAFZZ	5305-267-8980	BOLT, HEXAGON MS90726-14 (96906)	C	EA	4	*	*	*	*	*	*	*	*	87	9
N PAFZZ		CABLE, FUEL SHUTDOWN C1332-19 (86376)	C	EA	1	*	*	*	*	*	*	*	*	87	10
N PAFZZ	2910-922-0351	CABLE, FUEL SHUTDOWN C1332-14 (86376)	C	EA	1	*	*	*	*	*	*	*	*	87	10
N PAFZZ	2910-922-0352	CABLE, FUEL SHUTDOWN C1332-11 (86376)	C	EA	1	*	*	*	*	*	*	*	*	87	10
N PAFZZ	2910-922-0273	CABLE, FUEL SHUTDOWN C1332-23 (86376)	C	EA	1	*	*	*	*	*	*	*	*	87	10
N PAFZZ	2910-922-0351	CABLE, AIR SHUTDOWN C1332-14 (86376)	C	EA	1	*	*	*	*	*	*	*	*	87	11
N PAFZZ	2910-922-0352	CABLE, AIR SHUTDOWN C1332-11 (86376)	C	EA	1	*	*	*	*	*	*	*	*	87	11
N PAFZZ	2910-922-0353	CABLE, AIR SHUTDOWN C1332-18 (86376)	C	EA	1	*	*	*	*	*	*	*	*	87	11
N PAFZZ	5305-206-3537	SCREW, CAP, HEXAGON HEAD; NO. 10-32 THD SIZE, 1/2 IN. LG 10397 (82423)		EA	8	*	*	*	*	*	*	*	*		
N PAFZZ	5310-901-6847	NUT, HEXAGON MS9356-09 (96906)	C	EA	8	*	*	*	*	*	*	*	*		
N PAFZZ	5310-880-5978	WASHER, PLAIN; 3/16 IN. MS15795-807 (96906)	C	EA	8	*	*	*	*	*	*	*	*		
N PAFZZ	5305-071-1318	SCREW, OVAL HEAD; 1/4 IN. MS51957-83 (96906)	C	EA	10	*	*	*	*	*	*	*	*		
N PAFZZ	5310-903-5966	NUT, HEXAGON; 1/4-20 NC MS51971-1 (96906)	C	EA	10	*	*	*	*	*	*	*	*		
N PAFZZ	5310-763-3925	WASHER; 1/4 IN. MS9321-10 (96906)	C	EA	10	*	*	*	*	*	*	*	*		
N PAFZZ	5305-576-5417	BOLT; 3/8-16 X 1 IN. LG MS35307-360 (96906)	C	EA	12	*	*	*	*	*	*	*	*		
N PAFZZ	5310-477-6768	NUT; 3/8-16 THD SIZE MS35649-2384 (96906)	C	EA	12	*	*	*	*	*	*	*	*		
N PAFZZ	5310-773-7618	WASHER; 3/8 IN. MS15795-814 (96906)	C	EA	12	*	*	*	*	*	*	*	*		
N MFZZZ		GASKET, NEOPRENE 245-4510949-63 (80064) MANUFACTURE FROM:	C	EA	2										
N PAFZZ	5330-505-6611	GASKET, RUBBER, 1/16 IN. THK, AS REQUIRED		SH		*	*	*	*	*	*	*			
N PAFZZ	5310-767-9425	WASHER; 1/2 IN. MS15795-818 (96906)	C	EA	8	*	*	*	*	*	*	*	*		

	(1) SMR CODE	(2) FEDERAL STOCK NUMBER	(3) DESCRIPTION REF NUMBER & MFR CODE	USABLE ON CODE	(4) UNIT OF MEAS	(5) QTY INC IN UNIT	(6) 30-DAY DS MAINT ALLOWANCE (a) 1-30	(b) 21-50	(c) 51-100	(7) 30-DAY GS MAINT ALLOWANCE (a) 1-30	(b) 21-50	(c) 51-100	(8) 1-YR ALW PER 100 EQUIP CNTGY	(9) DEPOT MAINT ALW PER 100 EQUIP	(10) ILLUSTRATION (a) FIG. NO.	(b) ITEM NO.
N	MFFZZ		WASHER, RUBBER 245-4510949-66 (80064) MANUFACTURE FROM:	C	EA	8										
N	PAFZZ	5330-505-6611	GASKET, RUBBER, AS REQUIRED		SH		*	*	*	*	*	*				
N	PAFZZ	5305-082-6721	SCREW, MACHINE: OVAL HEAD; SLOTTED MS51957-81 (96906)	C	EA	8	*	*	*	*	*	*	*	*		
N	PAFZZ	5310-903-5966	NUT, HEXAGON: 1/4-20 NC CRESCENT MS51971-1 (96906)	C	EA	8	*	*	*	*	*	*	*	*		
N	XAFZZ		CLAMP, CABLE 2856 (86376)	C	EA	1										
N	PAFZZ	2910-922-0270	KIT, CABLE CONNECTING C2926-3 (86376)	C	EA	8	*	*	*	*	*	*	*	*		
N	XAFZZ		SCREW, CABLE CLAMP 259 (86376)	C	EA	1										
N	XAFZZ		SCREW, MOUNTING 1755 (86376)	C	EA	1										
N	XAFZZ		WASHER, LOCK: MTG SCREW 884 (86376)	C	EA	1										
N	PAFZZ		JOINT, BALL 1725G (86376)	C	EA	1	*	*	*	*	*	*	*	*		
N	PAFZZ	5310-005-8135	LOCKNUT, BALL JOINT 1128 (86376)	C	EA	2	*	*	*	*	*	*	*	*		
N	PAFZZ		CLAMP, TUBE FIG163 (46576)	C	EA	12	*	*	*	*	*	*	*	*		
N	PAFZZ	5310-933-8121	WASHER, LOCK: 1/4 IN. MS35338-139 (96906)	C	EA	1	*	*	*	*	*	*	*	*		
N	PAFZZ		CLAMP, CABLE, DOUBLE FIG164 (46576)	C	EA	4	*	*	*	*	*	*	*	*		
	MOOZZ		PLEXIGLAS, INSTRUMENT COVER MMC24-24 (98042) MANUFACTURE FROM:	A	EA	1										
	PAOZZ	9330-559-2043	PLEXIGLAS, AS REQUIRED		SH		*	*	*	*	*	*				
	MOOZZ		COVER, INSTRUMENT 9-18-243 (26571) MANUFACTURE FROM:	B	EA	1										
	PAOZZ	9330-559-2043	PLEXIGLAS, AS REQUIRED		SH		*	*	*	*	*	*				
			GROUP 57 - FAN, ENGINE ROOM													
	PAOZZ	4140-457-0603	FAN, CIRCULATING: AIR, 8 IN. 8FC24 (97418)	AB	EA	2	*	*	*	*	*	*	*	*	88	
	PAOZZ		SWITCH, TOGGLE FAN 15605 (97418)	AB	EA	1	*	*	*	*	*	*	*	*	88	1
	XAOZZ		MOTOR: 24V, DC, FAN MD24-2 (97418)	AB	EA	1									88	2
	XDOZZ		HOLDER, BRUSH, W/CAP M6-1 (97418)	AB	EA	1									88	3
	PAOZZ	5977-116-7237	BRUSH, ELECTRIC, CONTACT: FAN MOTOR M7-3 (97418)	AB	EA	1	*	*	*	*	*	*	*	*	88	4
	PAOZZ	4140-422-0986	FAN, CIRCULATING, BRACKET, 12 IN. 12FC24 (97418)	C	EA	1	*	*	*	*	*	*	*	*	89	
	PAOZZ		SWITCH, TOGGLE FAN 8290K16 (97418)	C	EA	1	*	*	*	*	*	*	*	*	89	1

(1) SMR CODE	(2) FEDERAL STOCK NUMBER	(3) DESCRIPTION REF NUMBER & MFR CODE	USABLE ON CODE	(4) UNIT OF MEAS	(5) QTY INC IN UNIT	(6) 30-DAY DS MAINT ALLOWANCE (a) 1-20	(b) 21-50	(c) 51-100	(7) 30-DAY GS MAINT ALLOWANCE (a) 1-20	(b) 21-50	(c) 51-100	(8) 1-YR ALW PER 100 EQUIP CNTGY	(9) DEPOT MAINT ALW PER 100 EQUIP	(10) ILLUSTRATION (a) FIG. NO.	(b) ITEM NO.
XAOZZ		MOTOR, 24V, DC, FAN MD24-12 (97418)	C	EA	1									89	2
XDOZZ		HOLDER, BRUSH W/CAP M6-1 (97418)	C	EA	1									89	3
PAOZZ	5977-116-7237	BRUSH, ELECTRIC CONTACT, FAN MOTOR M7-3 (97418)	C	EA	1	*	*	*	*	*	*	*	*	89	4
		GROUP 58 - ENGINE CONTROLS AND DISTRIBUTION PANEL													
XDHZZ		CONTROL AND DISTRIBUTION PANEL 287E11 (98042)	A	EA	1									90	1
XDOZZ		HOLDER, FUSE HPGD (71400)	A	EA	16									90	2
PACZZ	5920-280-3168	FUSE, CARTRIDGE F07A32V15A (81349)	A	EA	16	*	*	*	*	*	*	*	*	90	3
C PAOZZ	5930-725-9991	SWITCH, PUSH BUTTON; STARTING 8444K3 (27193)	A	EA	4	*	*	*	*	*	*	*	*	90	4
PAOZZ	5975-682-0306	SEAL, SWITCH NC3030 (97539)	A	EA	4	*	*	*	*	*	*	*	*	90	5
PAOZZ	5930-574-2929	SWITCH, ROTARY; NAVIGATIONAL LIGHTS C115028 (82121)	A	EA	2	*	*	*	*	*	*	*	*	90	6
XDOZZ		GUARD, BUTTON; STARTER SWITCH 120033 (98042)	A	EA	4									90	7
PAOZZ	5930-615-9376	SWITCH, TOGGLE; NAVIGATIONAL LIGHT MS35059-21 (96906)	A	EA	1	*	*	*	*	*	*	*	*	90	8
R PAOZZ	5930-539-7013	SEAL, SWITCH N1030B (97539)	A	EA	9	*	*	*	*	*	*	*	*	90	9
PAOZZ	5930-636-2821	SWITCH, TOGGLE MS35059-24 (96906)	A	EA	8	*	*	*	*	*	*	*	*	90	10
C XDHZZ		PANEL, CONTROL AND DISTRIBUTION 815F1197120SYMBOL1001 (80064)	BC	EA	1									91	1
XDOZZ		HOLDER, FUSE FHN23M (81349)	B	EA	16									91	2
PACZZ	5920-686-9548	FUSE, 10 AMPERE F09A250V10A (81349)	B	EA	16	*	*	*	*	*	*	*	*	91	3
PAOZZ	5930-589-5269	SWITCH, PUSH; HORN AND STARTER D201W2 (81640)	B	EA	6	*	*	*	*	*	*	*	*	91	4
PAOZZ	5930-800-5770	BOOT, RUBBER; HORN AND STARTER SWITCH MIL85423-7TYPEB (81349)	B	EA	6	*	*	*	*	*	*	*	*	91	5
PAOZZ	5930-636-2821	SWITCH, TOGGLE; LIGHT MS35059-24 (96906)	B	EA	8	*	*	*	*	*	*	*	*	91	6
PAOZZ	~~5930-600-6888~~	BOOT, RUBBER; LIGHT SWITCH N3030B (97539)	B	EA	8	*	*	*	*	*	*	*	*	91	7
C PAOZZ	5935-280-2390	RECEPTACLE, ELECTRICAL 90008620Z-74086 (80064)		EA	9	*	*	*	*	*	*	*	*	92	1
PAOZZ	5935-926-3078	PLUG, ELECTRICAL; RADIO, LIGHT AND FAN MS17791 (96906)	BC	EA	9	*	*	*	*	*	*	*	*	92	2
PAOZZ	5930-522-1425	SWITCH, TOGGLE, DPDT 90008620Z-74427 (80064)	BC	EA	6	*	*	*	*	*	*	*	*	92	3

	(1) SMR CODE	(2) FEDERAL STOCK NUMBER	(3) DESCRIPTION REF NUMBER & MFR CODE	USABLE ON CODE	(4) UNIT OF MEAS	(5) QTY INC IN UNIT	(6) 30-DAY DS MAINT ALLOWANCE (a) 1-30	(b) 21-50	(c) 51-100	(7) 30-DAY GS MAINT ALLOWANCE (a) 1-30	(b) 21-50	(c) 51-100	(8) 1-YR ALW PER 100 EQUIP CNTGY	(9) DEPOT MAINT ALW PER 100 EQUIP	(10) ILLUSTRATION (a) FIG. NO.	(b) ITEM NO.
	PAOZZ	6625-832-8408	AMMETER: 100-0-100 377B (98738)	B	EA	2	*	*	*	*	*	*	*	*	92	4
	PAOZZ	6625-404-3279	AMMETER: 150-0-150 377G (98738)	B	EA	1	*	*	*	*	*	*	*	*	92	5
	PAOZZ	5935-755-5851	COVER, RECEPTACLE 900056202-74031PC119 (80064)	B	EA	9	*	*	*	*	*	*	*	*	92	6
	PAOZZ	5935-241-2538	INSERT, RECEPTACLE 900056202-74026APC14 (80064)	B	EA	9	*	*	*	*	*	*	*	*	92	7
	PAOZZ	5930-258-5502	SWITCH, ROTARY 90009620-74207 (80064)	BC	EA	2	*	*	*	*	*	*	*	*	92	8
	PAOZZ	6685-168-0835	GAGE, PRESSURE: CONTROL PANEL TYPE5DFM2-1-21N (38508)	A	EA	1	*	*	*	*	*	*	*	*	92	9
	PAFZZ	2990-484-0687	CABLE WITH T HANDLE: ENGINE STOP CONTROLS TYPE43UC15FT (41625)	B	EA	1	*	*	*	*	*	*	*	*	92	10
	PAFZZ	2990-477-6127	CABLE WITH T HANDLE: ENGINE STOP CONTROLS TYPE43UC13FT (41625)	B	EA	1	*	*	*	*	*	*	*	*	92	10
	PAFZZ	2990-477-6126	CABLE WITH T HANDLE: ENGINE STOP CONTROLS TYPE43UC9FT (41625)	B	EA	1	*	*	*	*	*	*	*	*	92	11
	PAFZZ	2990-485-9458	CABLE WITH T HANDLE: ENGINE STOP CONTROLS TYPE43UC11FT (41625)	B	EA	1	*	*	*	*	*	*	*	*	92	11
	PAOZZ	6210-944-1090	LIGHT, INDICATOR: RED, MECHANICAL DIMMER 13207E2025-1 (97403)	B	EA	4	*	*	*	*	*	*	*	*	92	12
	XDOZZ		GRATING, WOOD: PILOT STAND LCM8145-1847016 (80064)		EA	1									92	13
	PAOZZ		SWITCH, PUSH: HORN 9-5-5476L (80064)	A	EA	1	*	*	*	*	*	*	*	*	93	1
	PAOZZ	6210-686-4169	LIGHT, INDICATOR: ENGINE ALARM PANEL L5100G (81640)	A	EA	4	*	*	*	*	*	*	*	*	93	2
	PAOZZ	6240-155-7836	LAMP, INCANDESCENT: ENGINE ALARM LIGHT MS25237-327 (96906)	A	EA	4	*	*	*	*	*	*	*	*	93	3
R	PAOZZ	5935-280-2390	RECEPTACLE, ELECTRICAL: OUTLET GA8B (76714)	A	EA	10	*	*	*	*	*	*	*	*	93	4
	XDOZZ		BOX, ELECTRICAL A604LB (00843)	A	EA	2									93	5
R	PAOZZ		LIGHT, INSTRUMENT PANEL MS17275 (96906)		EA	2	*	*	*	*	*	*	*	*	93	6
	PAOZZ	6240-155-7926	LAMP, INCANDESCENT: INSTRUMENT PANEL MS15613-2 (96906)		EA	2	*	*	*	*	*	*	*	*	93	7
R	PAOZZ		PLUG, CONNECTOR 701-1 (05381)	A	EA	9	*	*	*	*	*	*	*	*	93	8
	PAOZZ	6680-456-1583	TACHOMETER, ENGINE 5138365 (72582)		EA	4	*	*	*	*	*	*	*	*	93	9
	PAOZZ	6625-983-5947	AMMETER: 0-100 AMPS 73005 (05925)	A	EA	2	*	*	*	*	*	*	*	*	93	10
	PAOZZ	6685-113-5440	THERMOMETER: WATER TEMPERATURE 6402506 (72582)		EA	2	*	*	*	*	*	*	*	*	93	11
	PAOZZ	6685-113-5441	THERMOMETER: WATER TEMPERATURE 6402505 (72582)	A	EA	2	*	*	*	*	*	*	*	*	93	12

	(1) SMR CODE	(2) FEDERAL STOCK NUMBER	(3) DESCRIPTION REF NUMBER & MFR CODE	USABLE ON CODE	(4) UNIT OF MEAS	(5) QTY INC IN UNIT	(6) 30-DAY DS MAINT ALLOWANCE (a) 1-20	(b) 21-50	(c) 51-100	(7) 30-DAY GS MAINT ALLOWANCE (a) 1-20	(b) 21-50	(c) 51-100	(8) 1-YR ALW PER 100 EQUIP CNTGY	(9) DEPOT MAINT ALW PER 100 EQUIP	(10) ILLUSTRATION (a) FIG. NO.	(b) ITEM NO.
R	PAOZZ	6625-404-3277	AMMETER, DC; 200-0-200 73103 (85925)	AC	EA	2	*	*	*	*	*	*	*	*	93	13
	PAOZZ	6620-199-8730	GAGE, PRESSURE; OIL, ENGINE 6460283 (72582)		EA	4	*	*	*	*	*	*	*	*	93	14
	PAOZZ	6620-494-9620	GAGE, PRESSURE; OIL, TORQUE CONVERTER 6460464 (72582)		EA	2	*	*	*	*	*	*	*	*	93	15
	PAFZZ	2990-477-6125	CABLE, THROTTLE TYPE43C13FT (41625)	B	EA	1	*	*	*	*	*	*	*	*	93	16
	PAFZZ	2990-477-6124	CABLE, CLUTCH TYPE43C12FT (41625)	B	EA	1	*	*	*	*	*	*	*	*	93	17
	PAFZZ	2990-477-6123	CABLE, CLUTCH TYPE43C11FT (41625)	B	EA	1	*	*	*	*	*	*	*	*	93	18
	PAFZZ	2990-477-6122	CABLE, THROTTLE TYPE43C10FT (41625)	B	EA	1	*	*	*	*	*	*	*	*	93	19
	PAFZZ	2990-477-6130	KIT, THROTTLE A46110 (41625)	B	EA	1	*	*	*	*	*	*	*	*	93	20
	PAFZZ	2910-412-1934	KIT, THROTTLE A46111 (41625)	B	EA	1	*	*	*	*	*	*	*	*	93	21
	PAOZZ	5930-655-1575	SWITCH, TOGGLE; LIGHT MS35059-22 (96906)	A	EA	1	*	*	*	*	*	*	*	*	93	22
	PAOZZ	5310-833-3564	SEAL, SWITCH 30F000 (02929)	A	EA	1	*	*	*	*	*	*	*	*	93	23
	XDOZZ		BOX A404HF (00843)	A	EA	1									93	24
	PAOZZ	2910-646-9727	FUEL CYLINDER, ETHER; START AID LP657 (61112)	A	EA	4	*	*	*	*	*	*	*	*	94	1
	XDOZZ		LINE, FUEL LP3239-48 (61112)	A	EA	4									94	2
	PAOZZ	2990-919-6564	ATOMIZER LP2377-11 (61112)	A	EA	4	*	*	*	*	*	*	*	*	94	3
	PAOZZ	2910-076-9751	VALVE ASSEMBLY LP3234-1 (61112)	A	EA	4	*	*	*	*	*	*	*	*	94	4
	PAOZZ	5305-639-8375	SCREW, SELF-TAPPING; INSTRUMENT PANEL PLEXAGLASS COVER, PAN HEAD, NO. 10-32 THD SIZE, 3/4 IN. LG FFS107 (81348)	C	EA	56	*	*	*	*	*	*	*	*	95	1
N	MDOZZ		PLEXAGLASS; INSTRUMENT PANEL COVER 145-4510932-18 (80064) MANUFACTURE FROM:	C	EA	2									95	2
N	PAOZZ	9330-559-2043	PLEXAGLASS, 1/4 IN. THK, AS REQUIRED MILP8184 (81348)		SH		*	*	*	*	*	*			95	
N	MDOZZ		GASKET, NEOPRENE, INSTRUMENT COVER 145-4510932-17 (80064) MANUFACTURE FROM:	C	EA	4									95	3
N	PAOZZ	5330-261-5761	GASKET, NEOPRENE, 1/8 IN. THK, AS REQUIRED HHG156 (81348)		SH		*	*	*	*	*	*	*	*	95	
N	PAOZZ		GAGE, RAMP HYDRAULIC PRESSURE PATTERNDFMO-5000 (38508)	C	EA	1	*	*	*	*	*	*	*	*	95	4
N	PAOZZ		GAGE ACCUMULATOR PATTERNDFMO-5000 (38508)	C	EA	1	*	*	*	*	*	*	*	*	95	5

	(1) SMR CODE	(2) FEDERAL STOCK NUMBER	(3) DESCRIPTION REF NUMBER & MFR CODE	USABLE ON CODE	(4) UNIT OF MEAS	(5) QTY INC IN UNIT	(6) 30-DAY DS MAINT ALLOWANCE (a) 1-30	(b) 31-90	(c) 91-180	(7) 30-DAY GS MAINT ALLOWANCE (a) 1-30	(b) 31-90	(c) 91-180	(8) 1-YR ALW PER 100 EQUIP CNTGY	(9) DEPOT MAINT ALW PER 100 EQUIP	(10) ILLUSTRATION (a) FIG. NO.	(b) ITEM NO.
N	MMHZZ		PLATE: 1/8 IN. THK, INSTRUMENT PANEL GAGES MOUNTING 145-4510932-24 (80064) MANUFACTURE FROM:	C	EA	2									95	6
N	PAHZZ	9515-827-4474	PLATE, STEEL, 1/8 IN. THK, AS REQUIRED QQS698 (81348)		SH					*	*	*			95	
N	XDHZZ		NUTSERT: CONTROL AND DISTRIBUTION PANEL MTG, NO. 10-24 THD SIZE 9505-10 (19738)	C	EA	8									95	7
N	PAOZZ		GAGE, STEERING SYSTEM PRESSURE PATTERNDRMO-5000 (38508)	C	EA	1	*	*	*	*	*	*	*	*	95	8
N	PAOZZ	6240-155-7836	LAMP: 34W, 28V MS25237327 (96906)	C	EA	4	*	*	*	*	*	*	*	*		
N	PAOZZ	6240-242-0003	LAMP: 50W 50AR30V (08108)	C	EA	12	*	*	*	*	*	*	*	*		
N	PAOZZ	6240-155-7836	LAMP: 21 CP MS15584-6 (96906)	C	EA	1	*	*	*	*	*	*	*	*		
N	XDOZZ		BLOCK: TERMINAL, 8 PT 8-142 (71785)	C	EA	1										
N	PAOZZ	6240-155-7836	LAMP, INCANDESCENT, 28V, ENGINE ALARM LIGHT MS25237-327 (96906)	C	EA	1	*	*	*	*	*	*	*	*		
N	PAOZZ	5975-223-3512	COUPLING, POLYVINYL CHLORIDE 302-4510952-121 (80064)	C	EA	1	*	*	*	*	*	*	*	*		
N	XDOZZ		BLOCK, TERMINAL, END PIECE 302-4510952-29A (80064)	C	EA	1										
N	XDOZZ		CLIP, GROUNDING 302-4510952-139 (80064)	C	EA	1										
N	PAOZZ	6240-155-8726	LAMP: 15 CP MS15584-8 (96906)	C	EA	2	*	*	*	*	*	*	*	*		
N	PAOZZ	6240-269-0966	LAMP: 10 CP MS15584-11 (96906)	C	EA	3	*	*	*	*	*	*	*	*		
N	PAOZZ	6240-155-7926	LAMP: 3 CP MS15613-2 (96906)	C	EA	2	*	*	*	*	*	*	*	*		
	PAOZZ	6685-631-8243	THERMOMETER: OIL TEMPERATURE 1513556 (72582)		EA	2	*	*	*	*	*	*	*	*		
	PAOZZ	6625-411-4030	SHUNT, AMMETER: 150A, 100MV, W/BASE GE50-14003APZAA (97524)	BC	EA	1	*	*	*	*	*	*	*	*		
	PAOZZ	6625-404-3278	SHUNT, AMMETER: 100A, 100MV, W/BASE GE50-14003APKAA (97524)	BC	EA	2	*	*	*	*	*	*	*	*		
	XDOZZ		BLOCK, TERMINAL: 6PT, 250MCM 427 (89020)	BC	EA	1										
	PAOZZ	5930-727-6904	CONTROL, ALARM: OIL PRESSURE SWITCH 1507359 (72582)	B	EA	1	*	*	*	*	*	*	*	*		
	PAOZZ	5930-669-7872	CONTROL, ALARM: SWITCH, OIL PRESSURE 1507289 (72582)		EA	2	*	*	*	*	*	*	*	*		
	PAOZZ	5930-258-5394	SWITCH: ENGINE STARTING 1996097 (72582)		EA	2	*	*	*	*	*	*	*	*		
	PAOZZ	5930-229-3371	SWITCH, TOGGLE: ALARM SHUTOFF 3292162 (72582)		EA	2	*	*	*	*	*	*	*	*		

(1) SMR CODE	(2) FEDERAL STOCK NUMBER	(3) DESCRIPTION REF NUMBER & MFR CODE	USABLE ON CODE	(4) UNIT OF MEAS	(5) QTY INC IN UNIT	(6) 30-DAY DS MAINT ALLOWANCE (a) 1-20	(b) 21-50	(c) 51-100	(7) 30-DAY GS MAINT ALLOWANCE (a) 1-20	(b) 21-50	(c) 51-100	(8) 1-YR ALW PER 100 EQUIP CNTGY	(9) DEPOT MAINT ALW PER 100 EQUIP	(10) ILLUSTRATION (a) FIG. NO.	(b) ITEM NO.
PAOZZ	5935-539-2651	CONNECTOR, ELECTRICAL MS3106A10SL4S (96906)	A	EA	2	*	*	*	*	*	*	*	*		
PAOZZ	5935-223-0577	CLAMP, CONNECTOR AN3057-4 (88044)	A	EA	2	*	*	*	*	*	*	*	*		
PCCZZ	6140-263-4603	BATTERY, DRY CHARGE: 6V, 200 AMP HOUR MB131TYPE70 (81348)		EA	4	*	*	*	*	*	*	*	*		
PAHZZ	3040-678-3662	JOINT, BALL: ENGINE CONTROL A29104 (41625)	B	EA	4				*	*	*	*	*		
PAHZZ	2990-477-6129	KIT: ENGINE SHUTOFF, RH A46113 (41625)	B	EA	2				*	*	*	*	*		
PAHZZ	2990-477-6128	KIT: ENGINE SHUTOFF, LH A46112 (41625)	B	EA	2				*	*	*	*	*		
PAHZZ	2990-477-6131	KIT, CLUTCH A46114 (41625)	B	EA	2				*	*	*	*	*		
		GROUP 59 - NAVIGATIONAL LIGHTS AND HORN													
PAOZZ		SWITCH, PUSH: ENGINE ROOM LIGHTS 9547181 (80064)	A	EA	2	*	*	*	*	*	*	*	*	96	1
PAOZZ	5930-503-1836	SWITCH, PRESSURE: FUEL AND OIL M1670 (74400)	A	EA	4	*	*	*	*	*	*	*	*	96	2
PAOZZ	5930-727-6904	SWITCH, FUEL PRESSURE: NORMAL-OPEN 1507359 (99974)	C	EA	1	*	*	*	*	*	*	*	*	96	2
PAOZZ		SWITCH, PRESSURE: LOW OIL M11554 (74400)	A	EA	2	*	*	*	*	*	*	*	*	96	3
PAOZZ	6210-399-7028	FIXTURE, LIGHT: CARGO WELL MS17159-98 (96906)		EA	2	*	*	*	*	*	*	*	*	96	4
PAOZZ	6240-155-7790	LAMP, INCANDESCENT: SIDE AND CARGO WELL LIGHT MS15584-16 (96906)		EA	4	*	*	*	*	*	*	*	*	96	5
PAOZZ	6220-028-3445	LIGHT, PORT SIDE MS17847SYMBOL207-2 (96906)		EA	1	*	*	*	*	*	*	*	*	96	6
PAOZZ	6220-028-3444	LIGHT, STARBOARD SIDE MS17847SYMBOL208-2 (96906)		EA	1	*	*	*	*	*	*	*	*	96	7
PAOZZ	6220-782-9404	LIGHT, MASTHEAD MS17847SYMBOL218-1 (96906)		EA	1	*	*	*	*	*	*	*	*	96	8
PAOZZ	6240-269-0966	LAMP, INCANDESCENT: ANCHOR, MAST AND STERN LIGHT MS15584-11 (96906)		EA	3	*	*	*	*	*	*	*	*	96	9
PAOZZ	6220-054-2067	LIGHT, ANCHOR MS17847SYMBOL217-1 (96906)	AB	EA	1	*	*	*	*	*	*	*	*	96	10
PAOZZ	6220-062-6647	LIGHT, STERN MS17847SYMBOL211-1 (96906)		EA	1	*	*	*	*	*	*	*	*	96	11
PAOZZ	6220-054-2067	LIGHT, NOT UNDER COMMAND: RED LENS MS17847SYMBOL217-1 (96906)	AB	EA	2	*	*	*	*	*	*	*	*	96	12
PAOZZ	6240-155-8725	LAMP, INCANDESCENT: NOT UNDER COMMAND, LIGHT MS15584-6 (96906)	AB	EA	2	*	*	*	*	*	*	*	*	96	13
PAOZZ	6210-225-9210	FIXTURE, ELECTRIC LIGHT: ENGINE ROOM 591 (89617)	AC	EA	10	*	*	*	*	*	*	*	*	96	14
PAOZZ	6240-519-0853	LAMP, INCANDESCENT: CEILING LIGHT 50ARS24V (08108)	A	EA	10	*	*	*	*	*	*	*	*	96	15

(1) SMR CODE	(2) FEDERAL STOCK NUMBER	(3) DESCRIPTION — REF NUMBER & MFR CODE	USABLE ON CODE	(4) UNIT OF MEAS	(5) QTY INC IN UNIT	(6) 30-DAY OS MAINT ALLOWANCE (a) 1-20	(b) 21-30	(c) 31-100	(7) 30-DAY GS MAINT ALLOWANCE (a) 1-20	(b) 21-30	(c) 31-100	(8) 1-YR ALW PER 100 EQUIP CNTGY	(9) DEPOT MAINT ALW PER 100 EQUIP	(10) ILLUSTRATION (a) FIG. NO.	(b) ITEM NO.
PAOZZ	6350-224-4945	HORN NAVIGATION 101303 (98905)		EA	1	*	*	*	*	*	*	*	*	96	16
PAOZZ	5305-806-8883	SCREW, SELF-TAPPING: FOREMAST CLEAT, 1/4-20 THD SIZE, 1 IN. LG MS24628-66 (96906)	C	EA	2	*	*	*	*	*	*	*	*	97	1
PAOZZ		LIGHT, CLEAR LENS MS17847SYMBOL218 (96906)		EA	1	*	*	*	*	*	*	*	*	97	2
PAOZZ	6240-155-8725	LAMP MS15584-6 (96906)	C	EA	1	*	*	*	*	*	*	*	*	97	3
PAOZZ	5315-982-1349	PIN, HAIR COTTER: MAST DECK PIN LHCOT3 (73145)	C	EA	2	*	*	*	*	*	*	*	*	97	4
PAOZZ		WASHER, FLAT: MAIN MAST MTG PIN 125-4510928-45 (80064)	C	EA	4	*	*	*	*	*	*	*	*	97	5
MOOZZ		PIN, MAST HEEL: MAST DECK PIN 125-4510928-64 (80064) MANUFACTURE FROM:	C	EA	1									97	6
PAOZZ	9510-596-3564	ROD, 2 IN. DIA, STAINLESS STEEL, AS REQUIRED 57720COMPOSITION302CONDITIONA (81349)		EA		*	*	*	*	*	*			97	
PAOZZ		NUT, SELF-LOCKING: SHEAVE PIN 79NE080 (17224)	C	EA	1	*	*	*	*	*	*	*	*	97	7
PAOZZ	5315-982-1350	PIN, SHEAVE: MAST TOP PULLEY, 5/16 IN. DIA, 1 1/2 IN. LG, DRILLED SHANK 98306A (39428)	C	EA	1	*	*	*	*	*	*	*	*	97	8
PAOZZ	3020-436-7894	SHEAVE, MAST BOTTOM 125-4510928-39 (80064)	C	EA	1	*	*	*	*	*	*	*	*	97	9
PAOZZ		LIGHT, NOT UNDER COMMAND, RED LENS MS17847SYMBOL214 (96906)	C	EA	1	*	*	*	*	*	*	*	*	97	10
PAOZZ	6240-155-8725	LAMP MS15584-6 (96906)	C	EA	1	*	*	*	*	*	*	*	*	97	11
PAOZZ	6145-260-8795	CABLE: MAST AND BOW LIGHTS MILC915-6TYPEDH03 (81349)		FT	BK	*	*	*	*	*	*	*	*	97	12
PAOZZ	5315-236-8359	PIN, COTTER: TOP MAST PULLEY PIN, 1/8 IN. DIA, 1 IN. LG MS24665-370 (96906)	C	EA	1	*	*	*	*	*	*	*	*	97	13
PAOZZ	5310-625-5756	WASHER, FLAT: MAST TOP SHEAVE PIN RETAINING, 5/16 IN. MS15795-812 (96906)	C	EA	1	*	*	*	*	*	*	*	*	97	14
PAOZZ	5315-982-1343	PIN, TOGGLE: TOP SHEAVE, 3/8 IN. DIA, 4 IN. LG 3-81NX4INLG (08716)	C	EA	3	*	*	*	*	*	*	*	*	97	15
PAOZZ	3020-833-2501	SHEAVE MAST TOP 125-4510928-38 (80064)	C	EA	1	*	*	*	*	*	*	*	*	97	16
MOOZZ		LINE MANILA MAST 125-4510928-48 (80064) MANUFACTURE FROM:	C	EA	1									97	17
PAOZZ	4020-689-5688	ROPE, MANILLA, 1 1/8 IN., CIRCUMFERENCE, AS REQUIRED TR605TYPEMCLASS2 (81348)		CL		*	*	*	*	*	*	*	*	97	
MOOZZ		STERNMAST 125-4510928-33 (80064) MANUFACTURE FROM:	C	EA	1										
PAOZZ	4710-277-5466	PIPE, STEEL, 2 IN. ID, SCHEDULE 40, 3 FT, 6 IN. REQUIRED WWP404CLASSA53AERW53EWA53LW (81348)		FT		*	*	*	*	*	*	*	*		
PAOZZ	5315-982-1634	PIN, TOGGLE: STERN MAST SOCKET 3-81NX31-2INLGSTL (74427)	C	EA	1	*	*	*	*	*	*	*	*		

(1) SMR CODE	(2) FEDERAL STOCK NUMBER	(3) DESCRIPTION REF NUMBER & MFR CODE	USABLE ON CODE	(4) UNIT OF MEAS	(5) QTY INC IN UNIT	(6) 30-DAY DS MAINT ALLOWANCE (a) 1-20	(b) 21-30	(c) 31-100	(7) 30-DAY GS MAINT ALLOWANCE (a) 1-20	(b) 21-30	(c) 31-100	(8) 1-YR ALW PER 100 EQUIP CNTGY	(9) DEPOT MAINT ALW PER 100 EQUIP	(10) ILLUSTRATION (a) FIG. NO.	(b) ITEM NO.
MOOZZ		HALYARD MAST: 3/4 IN, 125-4510928-49 (80064) MANUFACTURE FROM:	C	EA	1										
PAOZZ	4020-003-6293	LINE, BRAIDED, NYLON, 1/4 IN. DIA, AS REQUIRED MILR24050 (81349)		FT		•	•	•	•	•	•	•	•		
MOOZZ		RUBBER: MAST SECURING COLLAR 125-4510928-50 (80064) MANUFACTURE FROM:	C	EA	2										
PAOZZ	5330-182-1433	GASKET, NEOPRENE, 1/4 IN. THK, AS REQUIRED HHG156 (81348)		SH		•	•	•	•	•	•				
MOOZZ		PIPE, PLASTIC FOREMAST SOCKET LINER 125-4510928-55 (80064) MANUFACTURE FROM:	C	EA	1										
PAOZZ	4710-926-4267	PIPE, PLASTIC, 2 1/2 IN. ID, SCHEDULE 40, AS REQUIRED LP315 (81348)		EA					•	•	•				
PAOZZ	5320-965-7109	RIVET, POP: FOREMAST SOCKET LINER AD46BS (07707)	C	EA	1				•	•	•	•	•		
PAOZZ		ADHESIVE 3M2216BM (94959)	C	QT	1	•	•	•	•	•	•	•	•		
PAOZZ		SNAP BOAT: FLAG HALYARD, NO. 1 F10613 (46576)	C	EA	2	•	•	•	•	•	•	•	•		
PAOZZ	6210-399-6339	LIGHT, INSTRUMENT PANEL, RED MILF16377-35 (81349)	C	EA	1	•	•	•	•	•	•	•	•		
PAOZZ	6240-155-7926	LAMP, INSTRUMENT PANEL MS15613-2 (96906)	C	EA	1	•	•	•	•	•	•	•	•		
MOOZZ		ENCLOSURE, WATER TIGHT A606CHNF (82260)	BC	EA	1										
PAOZZ	6140-195-5339	BATTERY, PORTABLE, STORAGE BB257U (81349)	C	EA	1	•	•	•	•	•	•	•	•		
PAOZZ	6145-926-3452	CABLE, 3#CM 125V, SMALL BOAT MILC915-2TYPEDBSP3 (81349)	C	FT	250	•	•	•	•	•	•	•	•		
PAOZZ	6145-914-9016	CABLE, 4#CM 125V, SMALL BOAT MILC915-2TYPEDBSP4 (81349)	C	FT	330	•	•	•	•	•	•	•	•		
PAOZZ	6145-997-6433	CABLE, 3#CM 125V, SMALL BOAT MILC915TYPEFBSP3 (81349)	C	FT	25	•	•	•	•	•	•	•	•		
PAOZZ	6145-184-5892	CABLE, 14#CM 1000V, ARMORED MILC2194-2TYPED3GA14 (81349)		FT	100	•	•	•	•	•	•	•	•		
PAOZZ	6145-184-5880	CABLE, 157#CM 1000V, ARMORED MILC2194-2TYPEDSGA150 (81349)	C	FT	50	•	•	•	•	•	•	•	•		
PAOZZ	5930-986-0755	BUTTON, PUSH WATER TIGHT FOR HORN M626 (13445)	C	EA	1	•	•	•	•	•	•	•	•		
PAOZZ	5330-202-2588	PACKING ASSEMBLY: MAST AND BOW LIGHTS CABLE MS16178-3 (96906)	C	EA	1	•	•	•	•	•	•	•	•		
PAOZZ	5330-202-2587	PACKING ASSEMBLY: CABLE ASSEMBLY MS16178-2 (96906)	C	EA	1	•	•	•	•	•	•	•	•		
PAOZZ	5975-503-4693	TUBE, STUFF NYLON, STERN LIGHT MILS19622-2 (81349)	C	EA	1	•	•	•	•	•	•	•	•		
PAOZZ	5975-877-6955	TUBE, STUFF NYLON: UNDER STATIC ISOLATOR CABINET MILS19622-3 (81349)	C	EA	4	•	•	•	•	•	•	•	•		
PAOZZ	5330-202-2590	PACKING ASSEMBLY: UNDER STATIC ISOLATOR CABINET M19622-18-0018 (81349)	C	EA	4	•	•	•	•	•	•	•	•		

	(1) SMR CODE	(2) FEDERAL STOCK NUMBER	(3) DESCRIPTION REF NUMBER & MFR CODE	USABLE ON CODE	(4) UNIT OF MEAS	(5) QTY INC IN UNIT	(6) 30-DAY DS MAINT ALLOWANCE (a) 1-20	(b) 21-50	(c) 51-100	(7) 30-DAY GS MAINT ALLOWANCE (a) 1-20	(b) 21-50	(c) 51-100	(8) 1-YR ALW PER 100 EQUIP CNTGY	(9) DEPOT MAINT ALW PER 100 EQUIP	(10) ILLUSTRATION (a) FIG. NO.
	PAOZZ	5975-808-4064	TUBE, STUFF NYLON MI9622-3-202 (81349)	C	EA	1	*	*	*	*	*	*	*	*	
	PAOZZ		LIGHT, ANCHOR, CLEAR MS17847SYMBOL203 (96906)	C	EA	1	*	*	*	*	*	*	*	*	
			GROUP 60 - HELM UNIT STEERING												
	PAFHH	2030-110-3450	HELM UNIT: STEERING CONTROL UE2-01 (96151) (COMPONENTS SAME AS HELM UNIT, FSN 2030-113-9470, EXCEPT WHERE INDIVIDUAL COMPONENTS ARE ANNOTATED)	A	EA	1	*	*	*	*	*	*	*	*	98
	PAHHH	2030-113-9470	HELM UNIT WK2-11 (96151)	BC	EA	1				*	*	*	*	*	98
	PAHHH	2030-115-0120	COLUMN ASSEMBLY: STEERING CONTROL SCA3 (96151) (USED WITH HELM UNIT, FSN 2030-110-3450, ONLY)	A	EA	1				*	*	*	*	*	98
	PAHHH	2030-113-9469	COLUMN, CONTROL: HELM UNIT SCC3 (96151) (USED WITH HELM UNIT, FSN 2030-113-9470, ONLY)	BC	EA	1				*	*	*	*	*	98
C	PAHZZ	5365-119-4777	RING, RETAINING 5245 (96151)		EA	2				*	*	*	*	*	98
	PAHZZ	5340-788-6043	RING, RETAINING 14092 (96151)		EA	2				*	*	*	*	*	98
C	PAHZZ	3110-439-2579	BEARING ASSEMBLY 21146 (96151)		EA	2				*	*	*	*	*	98
	PAHZZ	5340-788-6043	RING, RETAINING 14092 (96151)		EA	2				*	*	*	*	*	98
C	PAHZZ	5315-616-5523	KEY, WOODRUFF MS35756-11 (96906)		EA	2				*	*	*	*	*	98
	PAHZZ	2030-113-9471	SHAFT ASSEMBLY: STEERING COLUMN 5260-1 (96151) (USED WITH COLUMN ASSEMBLY, FSN 2030-115-0120, ONLY)	A	EA	1				*	*	*	*	*	98
	PAHZZ	2030-113-9466	SHAFT ASSEMBLY: STEERING COLUMN 5260-2 (96151) (USED WITH COLUMN ASSEMBLY, FSN 2030-113-9469, ONLY)	BC	EA	1				*	*	*	*	*	98
	XAHZZ		TUBE AND FLANGE ASSEMBLY: COLUMN 5246-1 (96151) (USED WITH COLUMN ASSEMBLY, FSN 2030-115-0120, ONLY)	A	EA	1									98
	XAHZZ		TUBE AND FLANGE ASSEMBLY 5246-2 (96151) (USED WITH COLUMN ASSEMBLY, FSN 2030-113-9469, ONLY)	BC	EA	1									98
	PAHZZ	5306-835-6064	BOLT, MACHINE 21047-1 (96151)		EA	4				*	*	*	*	*	98
	KFHZZ		SEAL, OIL 844 (96151) (PART OF KIT, FSN 2530-225-6413)		EA	2									99
	PAHZZ	5306-835-2068	BOLT, MACHINE: 5/16-18 THD SIZE, 5/8 IN. LG 21046-1 (96151)		EA	8				*	*	*	*	*	99
	PAHZZ	2590-900-6419	PLATE, MOUNTING 843 (96151)		EA	2				*	*	*	*	*	99

	(1) SMR CODE	(2) FEDERAL STOCK NUMBER	(3) DESCRIPTION REF NUMBER & MFR CODE	USABLE ON CODE	(4) UNIT OF MEAS	(5) QTY INC IN UNIT	(6) 30-DAY DS MAINT ALLOWANCE (a) 1-20	(b) 21-50	(c) 51-100	(7) 30-DAY GS MAINT ALLOWANCE (a) 1-20	(b) 21-50	(c) 51-100	(8) 1-YR ALW PER 100 EQUIP CNTGY	(9) DEPOT MAINT ALW PER 100 EQUIP	(10) ILLUSTRATION (a) FIG. NO.	(b) ITEM NO.
	KFHZZ		SEAL, QUADRUPLE RING 20599 (96151) (PART OF KIT, FSN 2530-226-6413)	B	EA	2									99	4
C	PAHZZ	2530-837-1286	BUSHING, CAP, LOCATOR 846 (96151)		EA	2				*	*	*	*	*	99	5
	KFHZZ		PACKING, PREFORMED 20783 (96151) (PART OF KIT, FSN 2530-226-6413)		EA	2									99	6
	PAHZZ	2530-738-0670	CONTROL PARTS ASSEMBLY: HELM UNIT 847K (96151) (USED WITH HELM UNIT, FSN 2030-110-3450, ONLY)	A	EA	1				*	*	*	*	*	99	7
	PAHZZ	2030-113-9467	CONTROL PARTS ASSEMBLY 21118-2 (96151) (USED WITH HELM UNIT, FSN 2030-113-9470, ONLY)	BC	EA	1				*	*	*	*	*	99	7
C	PAHZZ	3930-848-3371	PLUG, SEAL 21124 (96151)		EA	2				*	*	*	*	*	99	8
	KFHZZ		PACKING, PREFORMED 15006 (96151) (PART OF KIT, FSN 2530-226-6413)		EA	2									99	9
C	PAHZZ	2530-891-5998	SEAT, CHECK 859 (96151)		EA	2				*	*	*	*	*	99	10
C	PAHZZ	3110-844-0537	BALL, STEEL: 1/4 IN. 194 (96151)		EA	2				*	*	*	*	*	99	11
	PAHZZ	2530-716-7969	SPRING, COMPRESSION 857 (96151)		EA	2				*	*	*	*	*	99	12
	XAHZZ		SLEEVE, CONTROL 849 (96151)		EA	2									99	13
C	PAHZZ	2530-716-7950	SPRING, CENTERING 370 (96151)		EA	12				*	*	*	*	*	99	14
	PAHZZ	2030-189-6499	PIN, CENTERING 15 (96151)		EA	2				*	*	*	*	*	99	15
	XAHZZ		SPOOL, CONTROL 850 (96151)		EA	2									99	16
	XAHZZ		SPOOL, CONTROL VALVE 5365 (96151)	BC	EA	1									99	16
	XAHZZ		HOUSING, VALVE 21120-1 (96151) (USED WITH CONTROL PARTS, FSN 2530-738-0670, ONLY)	A	EA	1									99	17
	XAHZZ		HOUSING, VALVE 21120-2 (96151) (USED WITH CONTROL PARTS, FSN 2030-113-9467, ONLY)	BC	EA	1									99	17
	PAHZZ	5305-408-5561	SCREW, CAP: 12 POINT HEAD 21045-17 (96151)	BC	EA	14				*	*	*	*	*	99	18
C	PAHZZ	3930-848-0659	CAP, END 21176 (96151)		EA	2				*	*	*	*	*	99	19
	PAHZZ	2030-113-9472	GEROTOR SET: .860 IN. THK 42 (96151) (USED WITH HELM UNIT, FSN 2030-110-3450, ONLY)	A	EA	1				*	*	*	*	*	99	20

	(1) SMR CODE	(2) FEDERAL STOCK NUMBER	(3) DESCRIPTION REF NUMBER & MFR CODE	USABLE ON CODE	(4) UNIT OF MEAS	(5) QTY INC IN UNIT	(6) 30-DAY DS MAINT ALLOWANCE (a) 1-20	(b) 21-50	(c) 51-100	(7) 30-DAY GS MAINT ALLOWANCE (a) 1-20	(b) 21-50	(c) 51-100	(8) 1-YR ALW PER 100 EQUIP CNTGY	(9) DEPOT MAINT ALW PER 100 EQUIP	(10) ILLUSTRATION (a) FIG. NO.	(b) ITEM NO.
	PAHZZ	2030-113-9468	GEROTOR SET: 1.250 IN. THK 609 (96151) (USED WITH HELM UNIT, FSN 2030-113-9470, ONLY)	BC	EA	1				*	*	*	*	*	99	20
	PAHZZ	3930-900-6516	PLATE 594 (96151)		EA	2				*	*	*	*	*	99	21
N	PAHZZ	2030-129-6496	SPACER, HELM UNIT: SHAFT 838 (96151) (USED WITH HELM UNIT, FSN 2030-110-3450, ONLY)	A	EA	1				*	*	*	*	*	99	22
	PAHZZ	2530-420-4472	SPACER 20641 (96151) (USED WITH HELM UNIT, FSN 2030-113-9470, ONLY)	BC	EA	1				*	*	*	*	*	99	22
	PAHZZ	2920-848-1849	SHAFT, DRIVE: ROTOR 839 (96151)		EA	2				*	*	*	*	*	99	23
	PAHZZ	2530-226-6413	KIT, SEAL: HELM UNIT 5140 (96151)		EA	1				*	*	*	*	*	99	
			1-SEAL												99	1
			1-SEAL												99	4
			1-PACKING												99	6
			1-PACKING												99	9
N	PAOZZ	5306-216-8170	BOLT, MACHINE: STEERING COLUMN, 3/8-16 THD SIZE, 2 3/4 IN. LG L525-15 (46717)	C	EA	4	*	*	*	*	*	*	*	*		
N	PAOZZ	5310-584-7799	WASHER: STEERING WHEEL, 3/4 IN. ID, 1 1/2 IN. OD, 1/8 IN. THK MS15795-822 (96906)	C	EA	1	*	*	*	*	*	*	*	*		
			GROUP 61 - PIPING, STEERING													
	MOOZZ		HOSE ASSEMBLY: 24 IN. LG MHC61-20 (98042) MANUFACTURE FROM:	A	EA	1									100	1
	PAOZZ	4720-057-8612	HOSE, AS REQUIRED		FT		*	*	*	*	*	*			100	
	PAOZZ		FITTING CA24-24HB (30327)	A	EA	2	*	*	*	*	*	*	*	*	100	
	MOOZZ		HOSE ASSEMBLY MHC61-43 (98042) MANUFACTURE FROM:	A	EA	1									100	2
	PAOZZ		HOSE, 24 IN. REQUIRED U124 (30327)		FT		*	*	*	*	*	*			100	
	PAOZZ		CONNECTOR 4412-12S (01276)	A	EA	2	*	*	*	*	*	*	*	*	100	
	XDOZZ		ELBOW, PIPE TO TUBE: FLOW CONTROL OUTLET 10-6CBTX5 (08752)	A	EA	1									100	3
	XDOZZ		BUSHING, PIPE: PUMP INLET 2081-24-16S (01276)	A	EA	2									100	4
	XDOZZ		ELBOW, PIPE SWIVEL: PUMP INLET 60UG24-24 (30327)	A	EA	4									100	5
	XDOZZ		FITTING, SWIVEL UNION: PUMP OUTLET 60SA08-12 (30327)	A	EA	2									100	6
	XDFZZ		COUPLING, PIPE: CROSS LINE A2227 (63220)	A	EA	1									100	7

best copy available

(1) SMR CODE	(2) FEDERAL STOCK NUMBER	(3) DESCRIPTION REF NUMBER & MFR CODE	USABLE ON CODE	(4) UNIT OF MEAS	(5) QTY INC IN UNIT	(6) 30-DAY DS MAINT ALLOWANCE (a) 1-20	(b) 21-50	(c) 51-100	(7) 30-DAY GS MAINT ALLOWANCE (a) 1-20	(b) 21-50	(c) 51-100	(8) 1-YR ALW PER 100 EQUIP CNTGY	(9) DEPOT MAINT ALW PER 100 EQUIP	(10) ILLUSTRATION (a) FIG. NO.	(b) ITEM NO.
PAOZZ	4730-021-1802	ADAPTER, STRAIGHT: TANK OUTLET LINE 16-12FBTXS (45681)	A	EA	1	*	*	*	*	*	*	*	*	100	8
XDOZZ		TEE, UNION: HYDRAULIC LINES 16JBTXS (08752)	A	EA	1									100	9
PAOZZ	4730-628-4816	REDUCER, TUBE: LINE FITTING 161-12TRBTXS (45681)	A	EA	1	*	*	*	*	*	*	*	*	100	10
PAOZZ	4730-231-3016	ELBOW, PIPE TO TUBE: FILTER LINE 12-8CBTXS (45681)	A	EA	3	*	*	*	*	*	*	*	*	100	11
PAOZZ	4730-764-1879	ELBOW, TUBE: STEERING WHEEL LINE 10EBTXS (08752)	A	EA	1	*	*	*	*	*	*	*	*	100	12
XDOZZ		ADAPTER, STRAIGHT: STEERING WHEEL LINE 106FBTXS (08752)	A	EA	1									100	13
XDOZZ		REDUCER, PIPE: STEERING WHEEL LINE 245G08-06 (30327)	A	EA	4									100	14
PAOZZ	4730-865-9251	ADAPTER, STRAIGHT: LINE FITTING 12-8FBTXS (08752)	A	EA	7	*	*	*	*	*	*	*	*	100	15
PAOZZ		ELBOW, PIPE SWIVEL: STEERING CYLINDER 60UA08-12 (30327)	A	EA	2	*	*	*	*	*	*	*	*	100	16
PAOZZ		ADAPTER, STRAIGHT: PUMP OUTLET 12FBTLS (08752)	A	EA	2	*	*	*	*	*	*	*	*	100	17
XDOZZ		COUPLING, SWIVEL: PUMP OUTLET 60SG12-12 (30327)	A	EA	2									100	18
PAOZZ	4730-834-4521	ELBOW, TUBE: LINE FITTING 12EBTXS (08752)	A	EA	1	*	*	*	*	*	*	*	*	100	19
PAOZZ	4730-815-3439	TEE, PIPE: TANK RELIEF LINE 16RBTXS (08752)	A	EA	1	*	*	*	*	*	*	*	*	100	20
XDOZZ		REDUCER: RELIEF LINE 245G16-12 (30327)	A	EA	1									100	21
PAOZZ	6685-087-6925	GAGE, PRESSURE: HYDRAULIC STEERING TYPE5PATDMF (38508)		EA	2	*	*	*	*	*	*	*	*	100	22
XDOZZ		ELBOW, UNION: PRESSURE GAGE LINE 4EBTXS (08752)	A	EA	1									100	23
XDOZZ		TEE, TUBE: PRESSURE GAGE LINE 35824-10 (79470)	A	EA	1									100	24
XDOZZ		REDUCER, TUBE: PRESSURE GAGE LINE 35027-10-4 (79470)	A	EA	1									100	25
PAOZZ	4730-628-4815	REDUCER, STRAIGHT: EXPANSION TANK LINE TO STORAGE TANK 12-4TRBTXS (08752)	A	EA	1	*	*	*	*	*	*	*	*	100	26
PAOZZ	4730-628-4816	REDUCER, STRAIGHT: STORAGE TANK 16-12TRBTXS (08752)	A	EA	1	*	*	*	*	*	*	*	*	100	27
PAOZZ	4730-289-5484	ADAPTER, PIPE TO TUBE: EXPANSION TANK LINE 4-4FBTXS (08752)	A	EA	1	*	*	*	*	*	*	*	*	100	28
PAOZZ	4730-911-5342	PLUG, PIPE: SQ HD, EXPANSION TANK 1-4SHPS (24835)	A	EA	1	*	*	*	*	*	*	*	*	100	29
PAOZZ	4820-248-3701	VALVE BALL 1-244ABSE (98991)		EA	1	*	*	*	*	*	*	*	*	100	30
XAOZZ		BODY 44-05-1-4 (98991)		EA	1									100	

(1) SMR CODE	(2) FEDERAL STOCK NUMBER	(3) DESCRIPTION REF NUMBER & MFR CODE	USABLE ON CODE	(4) UNIT OF MEAS	(5) QTY INC IN UNIT	(6) 30-DAY DS MAINT ALLOWANCE (a) 1-20	(b) 21-50	(c) 51-100	(7) 30-DAY GS MAINT ALLOWANCE (a) 1-20	(b) 21-50	(c) 51-100	(8) 1-YR ALW PER 100 EQUIP CNTGY	(9) DEPOT MAINT ALW PER 100 EQUIP	(10) ILLUSTRATION (a) FIG. NO.	(b) ITEM NO.
XAOZZ		END PIPE 44-05-2-4 (98991)		EA	1									100	
XAOZZ		BALL 44-05-3-4 (98991)		EA	1									100	
XAOZZ		STEM 44-05-4-4 (98991)		EA	1									100	
XAOZZ		SEAT 44-05-5-60 (98991)		EA	1									100	
PAFZZ	5330-982-2634	SEAL BODY BUNAN 44-05-6-60 (98991)		EA	1	*	*	*	*	*	*	*	*	100	
PAFZZ	5330-982-6365	SEAL STEM TEFLON 44-05-7-69 (98991)		EA	1	*	*	*	*	*	*	*	*	100	
PAFZZ	3120-922-2313	BEARING, THRUST, TEFLON 44-05-8-69 (98991)		EA	1	*	*	*	*	*	*	*	*	100	
XAFZZ		FOLLOWER 44-05-9-25 (98991)		EA	1									100	
XAFZZ		WASHER BELL 44-05-10-4 (98991)		EA	1									100	
XAFZZ		NUT STEM 44-05-11-4 (98991)		EA	1									100	
XAFZZ		BOLT BODY 44-05-15-52 (98991)		EA	4									100	
XAFZZ		NUT 44-05-16-4 (98991)		EA	4									100	
XAFZZ		HANDLE 44-05-13-20 (98991)		EA	1									100	
R PAOZZ	2030-113-9479	WHEEL, STEERING; 36 IN. MHD61PC26 (98042)	AB	EA	1	*	*	*	*	*	*	*	*	100	31
N PAOZZ	2030-115-0121	WHEEL HELM; STEERING CONTROL, 30 IN. 145-4510932-23 (80064)	C	EA	1	*	*	*	*	*	*	*	*	100	31
PAOZZ	4720-067-0454	HOSE; 1/2 IN. 211-8 (03925)	B	FT	4	*	*	*	*	*	*	*	*	101	1
PAOZZ	4720-922-5136	HOSE, FLEXIBLE; 3/4 IN. ID 421-12 (08752)	B	FT	1	*	*	*	*	*	*	*	*	101	2
PAOZZ	4720-407-6550	HOSE, FLEXIBLE; 3/16 IN. ID 211-4 (03925)	B	FT	3	*	*	*	*	*	*	*	*	101	3
XDOZZ		FITTING, ELBOW HOSE; PUMP INLET 1025-6-8 (03925)	B	EA	1									101	4
PAOZZ	4730-769-3082	FITTING, SWIVEL, HOSE; PUMP INLET 319-8 (03925)	B	EA	1	*	*	*	*	*	*	*	*	101	5
XDFZZ		FITTING, HOSE END; PUMP AND CYLINDER LINE 326-8-8 (03925)	B	EA	1									101	6
XDOZZ		ELBOW; 90 DEG, MALE, PUMP OUTPUT LINE 1094-8-8 (03925)	B	EA	1									101	7
XDOZZ		ADAPTER; PUMP AND CYLINDER LINE 1012-8-8 (03925)	B	EA	1									101	8
XDOZZ		ADAPTER; STEERING CONTROL 1012-6-8 (03925)	B	EA	1									101	9
XDOZZ		COUPLING; BULKHEAD 210-1-21N (00906)	B	EA	1									101	10
XDOZZ		FITTING, SWIVEL, HOSE; 3/4 IN., PUMP OUTLET 20632-12-12 (08752)	B	EA	1									101	11

(1) SMR CODE	(2) FEDERAL STOCK NUMBER	(3) DESCRIPTION REF NUMBER & MFR CODE	USABLE ON CODE	(4) UNIT OF MEAS	(5) QTY INC IN UNIT	(6) 30-DAY DS MAINT ALLOWANCE (a) 1-20	(b) 21-30	(c) 31-100	(7) 30-DAY GS MAINT ALLOWANCE (a) 1-20	(b) 21-30	(c) 31-100	(8) 1-YR ALW PER 100 EQUIP CNTGY	(9) DEPOT MAINT ALW PER 100 EQUIP	(10) ILLUSTRATION (a) FIG. NO.	(b) ITEM NO.
PAOZZ	4730-618-7057	ELBOW: 3/4 IN., MALE, PUMP OUTLET 12-8CTX (08752)	B	EA	1	*	*	*	*	*	*	*	*	101	12
XDOZZ		FITTING, HOSE END: TANK LINE 20142-12-12 (08752)	B	EA	1									101	13
XDOZZ		REDUCER, CONNECTOR: FLOW DIVIDER 0102-8-6 (08752)	B	EA	1									101	14
XDOZZ		FITTING, HOSE END: MALE, COUNTERBALANCE VALVE 356-2-4 (03925)	B	EA	1									101	15
XDOZZ		FITTING, SWIVEL, HOSE END: COUNTERBALANCE VALVE 416-4-4 (03925)	B	EA	1									101	16
XDOZZ		ELBOW: 90 DEG, COUNTERBALANCE VALVE 1025-6-4 (03925)	B	EA	1									101	17
XDOZZ		BUSHING, REDUCING: 1/2 X 3/8 IN., COUNTERBALANCE VALVE 1093-8-6 (03925)	B	EA	1									101	18
PAOZZ	2030-115-0121	WHEEL, HELM: STEERING GUN10-23 (26571)	B	EA	1	*	*	*	*	*	*	*	*	101	19
N MOOZZ		HOSE FLEXIBLE: 1/2 IN. ID 516-4510940-55 (80064) MANUFACTURE FROM:	C	EA	4									102	1
N PAOZZ	4720-067-0454	HOSE FLEXIBLE, 1/2 IN., 3 FT REQUIRED FOR EACH HOSE SF211-8 (03925)		FT		*	*	*	*	*	*			102	
N PAOZZ	4730-801-1144	CONNECTOR, MALE: HOSE TO CYLINDER SF1012-8-8 (03925)	C	EA	8	*	*	*	*	*	*	*	*	102	2
N PAOZZ	4730-004-0732	ADAPTER, HOSE C3069X8X4 (79470)	C	EA	4	*	*	*	*	*	*	*	*	102	3
N MOOZZ		HOSE ASSEMBLY, HYDRAULIC A1332-8-8-21 (01276) MANUFACTURE FROM:	C	EA	1									102	4
N PAOZZ	4720-067-0454	HOSE, 1/2 IN. ID, AS REQUIRED 1503-8 (01276)		FT		*	*	*	*	*	*			102	
N PAOZZ		FITTING, HYDRAULIC HOSE, 1 REQUIRED PER HOSE 411-8 (01276)		EA		*	*	*	*	*	*			102	
N PAOZZ		FITTING, HYDRAULIC HOSE, 1 REQUIRED PER HOSE 326-8-8 (98441)		EA		*	*	*	*	*	*			102	
N PAOZZ	4820-462-2164	VALVE, BALL 444-4B (98991)	C	EA	8	*	*	*	*	*	*	*	*	102	5
N MOOZZ		HOSE ASSEMBLY A1332-4-6-30 (01276) MANUFACTURE FROM:	C	EA	6									102	6
N PAOZZ	4720-420-7723	HOSE, 3/8 IN. ID, AS REQUIRED 1503-6 (01276)		FT		*	*	*	*	*	*			102	
N PAOZZ		FITTING, HOSE, 1 REQUIRED PER HOSE 411-6 (01276)		EA		*	*	*	*	*	*			102	
N PAOZZ		FITTING, HOSE, 1 REQUIRED PER HOSE 412-4-6 (01276)		EA		*	*	*	*	*	*			102	
N MOOZZ		HOSE FLEXIBLE: 3/16 IN. ID 516-4510940-49 (80064) MANUFACTURE FROM:	C	EA	1									102	7
N PAOZZ		HOSE FLEXIBLE, 3/16 IN. ID, 2 FT 6 IN. REQUIRED SF211-4 (03925)		FT		*	*	*	*	*	*			102	

(1) SMR CODE	(2) FEDERAL STOCK NUMBER	(3) DESCRIPTION REF NUMBER & MFR CODE	USABLE ON CODE	(4) UNIT OF MEAS	(5) QTY INC IN UNIT	(6) 30-DAY DS MAINT ALLOWANCE (a) 1-20	(b) 21-50	(c) 51-100	(7) 30-DAY GS MAINT ALLOWANCE (a) 1-20	(b) 21-50	(c) 51-100	(8) 1-YR ALW PER 100 EQUIP CNTGY	(9) DEPOT MAINT ALW PER 100 EQUIP	(10) ILLUSTRATION (a) FIG. NO.	(b) ITEM NO.
N MOOZZ		HOSE FLEXIBLE; 3/4 IN. ID 516-4510940-50 (80064) MANUFACTURE FROM:	C	EA	1									102	8
N PAOZZ	4720-922-5136	HOSE FLEXIBLE; 3/4 IN. ID, 4 FT REQUIRED 421-21 (08752)		FT		•	•	•	•	•	•			102	
N MOOZZ		HOSE FLEXIBLE; 3/16 IN. ID 516-4510940-35 (80064) MANUFACTURE FROM:	C	EA	1									102	9
N PAOZZ		HOSE FLEXIBLE, 3/16 IN. ID, 3 FT REQUIRED SF211-4 (03925)		FT		•	•	•	•	•	•			102	
N PAOZZ	4730-263-5266	TEE; 1/2 IN. C3709X8 (79470)	C	EA	8	•	•	•	•	•	•	•	•	102	10
N MOOZZ		PIPE SEAMLESS; 1/2 IN. SCHEDULE 40 516-4510940-93 (80064) MANUFACTURE FROM:	C	EA	1									102	11
N PAOZZ		PIPE, 1/2 IN. SCHEDULE 40, AS REQUIRED MIL T20157 TYPEE (81349)		FT		•	•	•	•	•	•			102	
N MOOZZ		PIPE SEAMLESS; 1/2 IN. SCHEDULE 40 516-4510940-61 (80064) MANUFACTURE FROM:	C	EA	1									102	12
N PAOZZ		PIPE, 1/2 IN. SCHEDULE 40, 5 FT, 4 IN. REQUIRED MIL20157 TYPEE (81349)		FT		•	•	•	•	•	•			102	
N MOOZZ		PIPE SEAMLESS; 1/2 IN. SCHEDULE 40 516-4510940-63 (80064) MANUFACTURE FROM:	C	EA	1									102	13
N PAOZZ		PIPE, 1/2 IN. SCHEDULE 40 13 IN. REQUIRED MIL20157 TYPEE (81349)		FT		•	•	•	•	•	•			102	
N MOOZZ		PIPE SEAMLESS; 1/2 IN. SCHEDULE 40 516-4510940-56 (80064) MANUFACTURE FROM:	C	EA	1									102	14
N PAOZZ		PIPE, 1/2 IN. SCHEDULE 40, 1 FT, 8 IN. REQUIRED MIL T20157 TYPEE (81349)		FT		•	•	•	•	•	•			102	
N PAOZZ		UNION, FEMALE, FORGED STEEL 1-2IN2000LBW06 (14959)	C	EA	8	•	•	•	•	•	•	•	•	102	15
N MOOZZ		PIPE SEAMLESS; 1/2 IN. SCHEDULE 40 516-4510940-59 (80064) MANUFACTURE FROM:	C	EA	3									102	16
N PAOZZ		PIPE, 1/2 IN. SCHEDULE 40, 1 FT, 3 IN. REQUIRED FOR EACH PIPE MIL T20157 TYPEE (81349)		FT		•	•	•	•	•	•			102	
N PAOZZ	4730-999-8582	ELBOW; 90 DEG, 1/2 IN. C3509X8 (79470)	C	EA	7	•	•	•	•	•	•	•	•	102	17
N PAOZZ	4730-490-4006	BUSHING; 3/4 IN. X 1/2 IN. 5713 7636B6	C	EA	8	•	•	•	•	•	•	•	•	102	18
N MOOZZ		PIPE SEAMLESS; 1/2 IN. SCHEDULE 40 516-4510940-58 (80064) MANUFACTURE FROM:	C	EA	2									102	19
N PAOZZ		PIPE, 1/2 IN. SCHEDULE 40, 2 FT, 3 IN. REQUIRED FOR EACH PIPE MIL T20157 TYPEE (81349)		FT		•	•	•	•	•	•			102	
N PAOZZ	4730-542-5598	COUPLING C3309X8 (79470)	C	EA	1	•	•	•	•	•	•	•	•	102	20

(1) SMR CODE	(2) FEDERAL STOCK NUMBER	(3) DESCRIPTION REF NUMBER & MFR CODE	USABLE ON CODE	(4) UNIT OF MEAS	(5) QTY INC IN UNIT	(6) 30-DAY DS MAINT ALLOWANCE (a) 1-20	(b) 21-30	(c) 31-100	(7) 30-DAY GS MAINT ALLOWANCE (a) 1-20	(b) 21-30	(c) 31-100	(8) 1-YR ALW PER 100 EQUIP CNTGY	(9) DEPOT MAINT ALW PER 100 EQUIP	(10) ILLUSTRATION (a) FIG. NO.	(b) ITEM NO.
N MOOZZ		PIPE SEAMLESS: 1/2 IN. SCHEDULE 40 516-4510940-57 (80064) MANUFACTURE FROM:	C	EA	2									102	21
N PAOZZ		PIPE, 1/2 IN. SCHEDULE 40, 9 FT REQUIRED FOR EACH PIPE MILT20157TYPEE (81349)		FT		•	•	•	•	•	•			102	
N PAOZZ		FITTING, COMPRESSION 210 (34749)	C	EA	3	•	•	•	•	•	•	•	•	102	22
N MOOZZ		NIPPLE LONG: 1/2 IN. X 6 IN. LG 516-4510940-22 (80064) MANUFACTURE FROM:	C	EA	4									102	23
N PAOZZ		PIPE, 1/2 IN. SCHEDULE 40, AS REQUIRED MILT20157TYPEE (81349)	C	FT		•	•	•	•	•	•			102	
N MOOZZ		PIPE SEAMLESS: 1/2 IN. SCHEDULE 40 516-4510940-64 (80064) MANUFACTURE FROM:	C	EA	1									102	24
N PAOZZ		PIPE: 1/2 IN. SCHEDULE 40, 5 FT, 10 IN. REQUIRED MIL20157TYPEE (81349)		FT		•	•	•	•	•	•			102	
N MOOZZ		PIPE SEAMLESS: 1/2 IN. SCHEDULE 40 516-4510940-66 (80064) MANUFACTURE FROM:	C	EA	3									102	25
N PAOZZ		PIPE: 1/2 IN. SCHEDULE 40, 1 FT 1 IN. REQUIRED FOR EACH PIPE MILT20157TYPEE (81349)		FT		•	•	•	•	•	•			102	
N MOOZZ		PIPE SEAMLESS: SCHEDULE 40, 1/2 IN. 516-4510940-96 (80064) MANUFACTURE FROM:	C	EA	1									102	26
N PAOZZ		PIPE, 1/2 IN. SCHEDULE 40, 5 IN. REQUIRED MILT20157TYPEE (81349)		FT		•	•	•	•	•	•			102	
N MOOZZ		PIPE SEAMLESS: SCHEDULE 40, 1/2 IN. 516-4510940-95 (80064) MANUFACTURE FROM:	C	EA	1									102	27
N PAOZZ		PIPE, 1/2 IN. SCHEDULE 40, 4 FT 3 IN. REQUIRED MILT20157TYPEE (81349)		FT		•	•	•	•	•	•			102	
N PAOZZ	4730-004-0732	NIPPLE, HEXAGON C3069X8X4 (88334)	C	EA	2	•	•	•	•	•	•	•	•	102	28
N MOOZZ		PIPE, SEAMLESS: 1/2 IN. 516-4510940-104 (80064) MANUFACTURE FROM:	C	EA	1									102	29
N PAOZZ		PIPE: 1/2 IN. SCHEDULE 40, AS REQUIRED MILT20157TYPEE (81349)		FT		•	•	•	•	•	•				
N PAOZZ		FITTING, PIPE, CROSS 2080-8-8 (01276)	C	EA	1	•	•	•	•	•	•	•	•	102	30
N MOOZZ		PIPE SEAMLESS: SCHEDULE 40, 1/2 IN. 516-4510940-98 (80064) MANUFACTURE FROM:	C	EA	1									103	1
N PAOZZ		PIPE, 1/2 IN. SCHEDULE 40, AS REQUIRED MILT20157TYPEE (81349)		FT		•	•	•	•	•	•			103	
N MOOZZ		HOSE FLEXIBLE: 1/2 IN. ID 516-4510940-58 (80064) MANUFACTURE FROM:	C	EA	3									103	2
N PAOZZ	4720-867-6458	HOSE FLEXIBLE, 2 IN. ID, 9 FT, 6 IN. REQUIRED FOR EACH HOSE SF211-8 (03925)		FT		•	•	•	•	•	•			103	

	(1) SMR CODE	(2) FEDERAL STOCK NUMBER	(3) DESCRIPTION REF NUMBER & MFR CODE	USABLE ON CODE	(4) UNIT OF MEAS	(5) QTY INC IN UNIT	(6) 30-DAY DS MAINT ALLOWANCE (a) 1-30	(b) 31-50	(c) 51-100	(7) 30-DAY GS MAINT ALLOWANCE (a) 1-30	(b) 31-50	(c) 51-100	(8) 1-YR ALW PER 100 EQUIP CNTGY	(9) DEPOT MAINT ALW PER 100 EQUIP	(10) ILLUSTRATION (a) FIG. NO.	(b) ITEM NO.
N	MOOZZ		PIPE, SEAMLESS: 1/2 IN. SCHEDULE 40 516-4510940-59 (80064) MANUFACTURE FROM:	C	EA	2									103	3
N	PAOZZ		PIPE, 1/2 IN. SCHEDULE 40, AS REQUIRED MILT20157TYPEE (81349)		FT		•	•	•	•	•	•			103	
N	PAOZZ	4730-278-3559	NIPPLE LONG: 1/2 IN. X 2 IN. LG WAN351 (81349)	C	EA	1	•	•	•	•	•	•	•	•	103	4
N	MOOZZ		HOSE ASSEMBLY, HYDRAULIC A1332-8-8-21 (01276) MANUFACTURE FROM:	C	EA	1									103	5
N	PAOZZ	4720-067-0454	HOSE, 1/2 IN. ID, AS REQUIRED 1503-8 (01276)		FT		•	•	•	•	•	•			103	
N	PAOZZ		FITTING, HYDRAULIC HOSE, 1 REQUIRED PER HOSE 411-8 (01276)		EA		•	•	•	•	•	•			103	
N	PAOZZ		FITTING, HYDRAULIC HOSE, 1 REQUIRED PER HOSE 326-8-8 (98441)		EA		•	•	•	•	•	•			103	
N	MOOZZ		PIPE, SEAMLESS: 1/2 IN. MANUFACTURE FROM:	C	EA	1									103	6
N	PAOZZ		PIPE, 1/2 IN. SCHEDULE 40, AS REQUIRED MILT20157TYPEE (81349)		FT		•	•	•	•	•	•			103	
N	PAOZZ	4730-999-8582	ELBOW: 90 DEG, 1/2 IN. C3509X8 (79470)	C	EA	9	•	•	•	•	•	•	•	•	103	7
N	MOOZZ		PIPE, SEAMLESS: 1/2 IN. SCHEDULE 40 MANUFACTURE FROM:	C	EA	1									103	8
N	PAOZZ		PIPE, 1/2 IN. SCHEDUCLE 40, AS REQUIRED MILT20157TYPEE (81349)		FT		•	•	•	•	•	•			103	
N	MOOZZ		PIPE SEAMLESS: 1/2 IN. SCHEDULE 40 516-4510940-70 (80064) MANUFACTURE FROM:	C	EA	1									103	9
N	PAOZZ		PIPE, 1/2 IN. SCHEDULE 40, 3 FT, 3 IN. REQUIRED MILT20157TYPEE (81349)		FT		•	•	•	•	•	•			103	
N	MOOZZ		PIPE SEAMLESS: 1/2 IN. SCHEDULE 40 MANUFACTURE FROM:	C	EA	1									103	10
N	PAOZZ		PIPE, 1/2 IN. SCHEDULE 40, AS REQUIRED MILT20157TYPEE (81349)		FT		•	•	•	•	•	•			103	
N	PAOZZ		ELBOW, STREET 7194 (63686)	C	EA	1	•	•	•	•	•	•	•	•	103	11
N	PAOZZ	4730-490-4006	BUSHING: 3/4 IN. X 1/2 IN. 5713 (63686)	C	EA	4	•	•	•	•	•	•	•	•	103	12
N	MOOZZ		PIPE SEAMLESS: 1/2 IN. SCHEDULE 40 MANUFACTURE FROM:	C	EA	1									103	13
N	PAOZZ		PIPE, 1/2 IN. SCHEDULE 40, AS REQUIRED MILT20157TYPEE (81349)		FT		•	•	•	•	•	•			103	
N	MOOZZ		PIPE SEAMLESS: 1/2 IN. SCHEDULE 40 516-4510940-71 (80064) MANUFACTURE FROM:	C	EA	1									103	14
N	PAOZZ		PIPE, 1/2 IN. SCHEDULE 40, 2 FT, 4 IN. REQUIRED MILT20157TYPEE (81349)		FT		•	•	•	•	•	•			103	

(1) SMR CODE	(2) FEDERAL STOCK NUMBER	(3) DESCRIPTION — REF NUMBER & MFR CODE	USABLE ON CODE	(4) UNIT OF MEAS	(5) QTY INC IN UNIT	(6) 30-DAY DS MAINT ALLOWANCE (a) 1-20	(b) 21-50	(c) 51-100	(7) 30-DAY GS MAINT ALLOWANCE (a) 1-20	(b) 21-50	(c) 51-100	(8) 1-YR ALW PER 100 EQUIP CNTGY	(9) DEPOT MAINT ALW PER 100 EQUIP	(10) ILLUSTRATION (a) FIG. NO.	(b) ITEM NO.
N PAOZZ	4730-263-5266	TEE: 1/2 IN. C3709X8 (79470)	C	EA	8	*	*	*	*	*	*	*	*	103	15
N PAOZZ	4730-004-0732	NIPPLE, HEXAGON C3069X8X4 (88334)	C	EA	2	*	*	*	*	*	*	*	*	103	16
N PAOZZ		REDUCER 3-4INX1-2IN (14959)	C	EA	2	*	*	*	*	*	*	*	*	103	17
N PAOZZ	4730-278-3561	NIPPLE CLOSE: 1/2 IN. X 1 1/8 IN. LG WMN351 (81348)	C	EA	1	*	*	*	*	*	*	*	*	103	18
N MOOZZ		PIPE SEAMLESS: 1/2 IN. SCHEDULE 40 MANUFACTURE FROM:	C	EA	1									103	19
N PAOZZ		PIPE, 1/2 IN. SCHEDULE 40, AS REQUIRED MILT20157TYPEE (81349)		FT		*	*	*	*	*	*			103	
N MOOZZ		PIPE SEAMLESS: 1/2 IN. SCHEDULE 40 MANUFACTURE FROM:	C	EA	1									103	20
N PAOZZ		PIPE, 1/2 IN. SCHEDULE 40, AS REQUIRED MILT20157TYPEE (81349)		FT		*	*	*	*	*	*			103	
N MOOZZ		PIPE SEAMLESS: 1/2 IN. SCHEDULE 40 MANUFACTURE FROM:	C	EA	1									103	21
N PAOZZ		PIPE, 1/2 IN. SCHEDULE 40, AS REQUIRED MILT20157TYPEE (81349)		FT		*	*	*	*	*	*			103	
N MOOZZ		NIPPLE, LONG: 1/2 IN. X 6 IN. LG 516-4510940-22 (80064) MANUFACTURE FROM:	C	EA	3									103	22
N PAOZZ		PIPE, 1/2 IN. SCHEDULE 40, AS REQUIRED MILT20157TYPEE (81349)		FT		*	*	*	*	*	*			103	
N PAOZZ		ELBOW: 45 DEG, 1/2 IN. 1-2IN300LB (14959)	C	EA	1	*	*	*	*	*	*	*	*	103	23
N MOOZZ		PIPE SEAMLESS: 1/2 IN. SCHEDULE 40 MANUFACTURE FROM:	C	EA	2									103	24
N PAOZZ		PIPE, 1/2 IN. SCHEDULE 40, AS REQUIRED MILT20157TYPEE (81349)		FT		*	*	*	*	*	*			103	
N PAOZZ	4730-764-1661	CONNECTOR REDUCING 0108-8-6 (06752)	C	EA	2	*	*	*	*	*	*	*	*	103	25
N PAOZZ		UNION, FEMALE, FORGED STEEL 1-2IN2000LBW06 (14595)	C	EA	8	*	*	*	*	*	*	*	*	103	26
N MOOZZ		PIPE SEAMLESS: 1/2 IN. SCHEDULE 40 MANUFACTURE FROM:	C	EA	1									103	27
N PAOZZ		PIPE, 1/2 IN. SCHEDULE 40, AS REQUIRED MILT20157TYPEE (81349)		FT		*	*	*	*	*	*			103	
N MOOZZ		PIPE SEAMLESS: 1/2 IN. SCHEDULE 40 516-4510940-65 (80064) MANUFACTURE FROM:	C	EA	1									103	28
N PAOZZ		PIPE, 1/2 IN. SCHEDULE 40, 3 FT, 5 IN. REQUIRED MILT20157TYPEE (81349)		FT		*	*	*	*	*	*			103	
N MOOZZ		PIPE SEAMLESS: 1/2 IN. SCHEDULE 40 MANUFACTURE FROM:	C	EA	1									103	29
N PAOZZ		PIPE, 1/2 IN. SCHEDULE 40, AS REQUIRED MILT20157TYPEE (81349)		FT		*	*	*	*	*	*			103	

	(1) SMR CODE	(2) FEDERAL STOCK NUMBER	(3) DESCRIPTION REF NUMBER & MFR CODE	USABLE ON CODE	(4) UNIT OF MEAS	(5) QTY INC IN UNIT	(6) 30-DAY DS MAINT ALLOWANCE (a) 1-20	(b) 21-50	(c) 51-100	(7) 30-DAY GS MAINT ALLOWANCE (a) 1-20	(b) 21-50	(c) 51-100	(8) 1-YR ALW PER 100 EQUIP CNTGY	(9) DEPOT MAINT ALW PER 100 EQUIP	(10) ILLUSTRATION (a) FIG. NO.	(b) ITEM NO.
N	MOOZZ		PIPE SEAMLESS: 1/2 IN. SCHEDULE 40 MANUFACTURE FROM:	C	EA	1									103	30
N	PAOZZ		PIPE, 1/2 IN. SCHEDULE 40, AS REQUIRED MILT20157TYPEE (81349)		FT		*	*	*	*	*	*			103	
N	MOOZZ		PIPE SEAMLESS: 1/2 IN. SCHEDULE 40 MANUFACTURE FROM:	C	EA	1									103	31
N	PAOZZ		PIPE, 1/2 IN. SCHEDUCLE 40, AS REQUIRED MILT20157TYPEE (81349)		FT		*	*	*	*	*	*			103	
N	MOOZZ		PIPE SEAMLESS, 1/2 IN. SCHEDULE 40 516-4510940-68 (80064) MANUFACTURE FROM:	C	EA	1									103	32
N	PAOZZ		PIPE, 1/2 IN. SCHEDULE 40, 5 FT, 8 IN. REQUIRED MILT20157TYPEE (81349)		FT		*	*	*	*	*	*			103	
N	MOOZZ		PIPE SEAMLESS: 1/2 IN. SCHEDULE 40 MANUFACTURE FROM:	C	EA	1									103	33
N	PAOZZ		PIPE, 1/2 IN. SCHEDULE 40, AS REQUIRED MILT20157TYPEE (81349)		FT		*	*	*	*	*	*			103	
N	MOOZZ		PIPE SEAMLESS: 1/2 IN. SCHEDULE 40 MANUFACTURE FROM:	C	EA	1									103	34
N	PAOZZ		PIPE, 1/2 IN. SCHEDULE 40, AS REQUIRED MILT20157TYPEE (81349)		FT		*	*	*	*	*	*			103	
N	MOOZZ		HOSE FLEXIBLE: 1/2 IN. ID 516-4510940-51 (80064) MANUFACTURE FROM:	C	EA	2									103	35
N	PAOZZ	4720-067-0454	HOSE FLEXIBLE, 1/2 IN. ID, 4 FT REQUIRED FOR EACH HOSE SF211-8 (03925)		FT		*	*	*	*	*	*			103	
N	PAOZZ	4730-555-1764	ELBOW: 90 DEG, 3/8 IN. NPT X 3/4, 16 JIC SF1025-6-8 (03925)	C	EA	2	*	*	*	*	*	*	*	*	103	36
N	MOOZZ		HOSE FLEXIBLE: 3/4 IN. ID 516-4510940-23 (80064) MANUFACTURE FROM:	C	EA	1									103	37
N	PAOZZ	4720-922-5136	HOSE FLEXIBLE, 3/4 IN., 5 FT, 5 IN. REQUIRED 421-12 (08752)		FT		*	*	*	*	*	*			103	
N	PAOZZ	4730-618-7057	ELBOW MALE 12-8CTX (08752)	C	EA	2	*	*	*	*	*	*	*	*	103	38
N	PAOZZ	4730-187-7598	COUPLING: 3/4 IN. WMP521 (81348)	C	EA	4	*	*	*	*	*	*	*	*	103	39
N	MOOZZ		PIPE: 3/4 IN. SCHEDULE 40 516-4510940-47 (80064) MANUFACTURE FROM:	C	EA	1									103	40
N	PAOZZ		PIPE, 3/4 IN. SCHEDULE 40, 2 FT, 6 IN. REQUIRED MILT20157TYPEE (81349)		FT		*	*	*	*	*	*			103	
N	PAOZZ	4730-193-7080	ELBOW: 90 DEG, 3/4 IN. WMP521 (81348)	C	EA	7	*	*	*	*	*	*	*	*	103	41
N	PAOZZ	4730-196-2058	NIPPLE CLOSE: 3/4 IN. X 1 3/8 IN. LG WMN351 (81348)	C	EA	3	*	*	*	*	*	*	*	*	103	42
N	PAOZZ		REDUCER: 3/4 IN. X 1/2 IN. 3-4INX1-2IN (14959)	C	EA	6	*	*	*	*	*	*	*	*	103	43

(1) SMR CODE	(2) FEDERAL STOCK NUMBER	(3) DESCRIPTION REF NUMBER & MFR CODE	USABLE ON CODE	(4) UNIT OF MEAS	(5) QTY INC IN UNIT	(6) 30-DAY DS MAINT ALLOWANCE (a) 1-20	(b) 21-50	(c) 51-100	(7) 30-DAY GS MAINT ALLOWANCE (a) 1-20	(b) 21-50	(c) 51-100	(8) 1-YR ALW PER 100 EQUIP CNTGY	(9) DEPOT MAINT ALW PER 100 EQUIP	(10) ILLUSTRATION (a) FIG. NO.	(b) ITEM NO.
N MOOZZ		PIPE SEAMLESS: 3/4 IN. SCHEDULE 40 516-4510940-79 (80064) MANUFACTURE FROM:	C	EA	1									103	44
N PAOZZ		PIPE, 3/4 IN. SCHEDULE 40, 6 FT, 3 IN. REQUIRED MILT20157TYPEE (81349)		FT		*	*	*	*	*	*			103	
N PAOZZ		UNION: 3/4 IN. 1983-4IN (14959)	C	EA	1	*	*	*	*	*	*	*	*	103	45
N PAOZZ	4730-945-5393	ELBOW STREET: 90 DEG, 3/4 IN. 268E (14959)	C	EA	1	*	*	*	*	*	*	*	*	103	46
N MOOZZ		PIPE SEAMLESS: 3/4 IN. SCHEDULE 40 516-4510940-74 (80064) MANUFACTURE FROM:	C	EA	2									103	47
N PAOZZ		PIPE, 3/4 IN. SCHEDULE 40, 3 FT, 10 IN. REQUIRED FOR EACH PIPE MILT20157TYPEE (81349)		FT		*	*	*	*	*	*			103	
N MOOZZ		PIPE SEAMLESS: 1/2 IN. SCHEDULE 40 516-4510940-76 (80064) MANUFACTURE FROM:	C	EA	1									103	48
N PAOZZ		PIPE, 1/2 IN. SCHEDULE 40, 4 FT REQUIRED MILT20157TYPEE (81349)		FT		*	*	*	*	*	*			103	
N MOOZZ		PIPE SEAMLESS: 1/2 IN. SCHEDULE 40 516-4510940-77 (80064) MANUFACTURE FROM:	C	EA	1									103	49
N PAOZZ		PIPE, 1/2 IN. SCHEDULE 40, 1 FT 10 IN. REQUIRED MILT20157TYPEE (81349)		FT		*	*	*	*	*	*			103	
N PAOZZ	4730-781-4996	CONNECTOR MALE C5205X4X8 (79470)	C	EA	1	*	*	*	*	*	*	*	*	104	1
N MOOZZ		NIPPLE LONG: 1/2 IN. X 5 IN. LG 516-4510940-29 (80064) MANUFACTURE FROM:	C	EA	4									104	2
N PAOZZ		PIPE, 1/2 IN. SCHEDULE 40, 5 IN. REQUIRED FOR EACH NIPPLE MILT20157TYPEE (81349)		FT		*	*	*	*	*	*			104	
N PAOZZ	4730-263-5266	TEE: 1/2 IN. C3709X8 (79470)	C	EA	3	*	*	*	*	*	*	*	*	104	3
N MOOZZ		NIPPLE, LONG: 1/2 IN. X 6 IN. LG 516-4510940-22 (80064) MANUFACTURE FROM:	C	EA	3									104	4
N PAOZZ		PIPE, 1/2 IN. SCHEDULE 40, AS REQUIRED MILT20157TYPEE (81349)		FT		*	*	*	*	*	*			104	
N MOOZZ		PIPE SEAMLESS: 1/2 IN. SCHEDULE 40 MANUFACTURE FROM:	C	EA	2									104	5
N PAOZZ		PIPE, 1/2 IN. SCHEDULE 40, AS REQUIRED MILT20157TYPEE (81349)		FT		*	*	*	*	*	*			104	
N PAOZZ	4730-999-8582	ELBOW: 90 DEG, 1/2 IN. C3509X8 (79470)	C	EA	1	*	*	*	*	*	*	*	*	104	6
PAFZZ	4820-554-7951	VALVE, RELIEF: STEERING J50 (02249)	BC	EA	1	*	*	*	*	*	*	*	*	104	7
N PAOZZ	4730-879-5398	END HOSE: 1/2 IN. NPT PM326-8-8S (03925)	C	EA	13	*	*	*	*	*	*	*	*	104	8

	(1) SMR CODE	(2) FEDERAL STOCK NUMBER	(3) DESCRIPTION REF NUMBER & MFR CODE	USABLE ON CODE	(4) UNIT OF MEAS	(5) QTY INC IN UNIT	(6) 30-DAY DS MAINT ALLOWANCE (a) 1-20	(b) 21-50	(c) 51-100	(7) 30-DAY GS MAINT ALLOWANCE (a) 1-20	(b) 21-50	(c) 51-100	(8) 1-YR ALW PER 100 EQUIP CNTGY	(9) DEPOT MAINT ALW PER 100 EQUIP	(10) ILLUSTRATION (a) FIG. NO	(b) ITEM NO.
N	MOOZZ		HOSE FLEXIBLE: 1/2 IN. ID 516-4510940-6 (80064) MANUFACTURE FROM:	C	EA	1									104	9
N	PAOZZ	4720-067-0454	HOSE FLEXIBLE, 2 IN., 1 FT 9 IN. REQUIRED SF211-8 (03925)		FT		*	*	*	*	*	*			104	
N	MOOZZ		NIPPLE LONG: 1/2 IN. X 9 IN. LG 516-4510940-40 (80064) MANUFACTURE FROM:	C	EA	2									104	10
N	PAOZZ		PIPE: 2 IN. SCHEDULE 40 9 IN. REQUIRED MILT20157TYPEE (81349)		FT		*	*	*	*	*	*			104	
N	PAOZZ	4730-542-5598	COUPLING C3309X8 (79470)	C	EA	2	*	*	*	*	*	*	*	*	104	11
N	MOOZZ		HOSE FLEXIBLE: 1/2 IN. ID 516-4510940-53 (80064) MANUFACTURE FROM:	C	EA	2									104	12
N	PAOZZ	4720-067-0454	HOSE FLEXIBLE, 1/2 IN. ID, 2 FT, 6 IN. REQUIRED FOR EACH HOSE SF211-8 (03925)		FT		*	*	*	*	*	*			104	
N	MOOZZ		HOSE FLEXIBLE: 1/2 IN. ID 516-4510940-52 (80064) MANUFACTURE FROM:	C	EA	1									104	13
N	PAOZZ	4720-067-0454	HOSE FLEXIBLE, 1/2 IN. ID, 2 FT REQUIRED SF211-8 (03925)		FT		*	*	*	*	*	*			104	
N	PAOZZ	4730-764-3086	SWIVEL END HOSE J5319-8S (03925)	C	EA	13	*	*	*	*	*	*	*	*	104	14
N	PAOZZ	4730-802-8876	UNION: 1/2 IN. X 1/2 IN. C5305X8 (88334)	C	EA	4	*	*	*	*	*	*	*	*	104	15
N	MOOZZ		PIPE: SCHEDULE 40, 2 IN. 516-4510940-87 (80064) MANUFACTURE FROM:	C	EA	2										
N	PAOZZ		PIPE: SCHEDULE 40, 2 IN. 1 1/2 IN. REQUIRED FOR EACH PIPE MILT20157TYPEE (81349)		FT		*	*	*	*	*	*				
N	XDOZZ		HANGER PIPE 100-12 (85105)	C	EA	30										
N	XDOZZ		HANGER PIPE 101-12 (85105)	C	EA	10										
N	PAOZZ	4730-852-5654	ELBOW, MALE: 90 DEG, 1/2 IN. SF1094-8-8 (03925)	C	EA	6	*	*	*	*	*	*	*	*		
N	PAOZZ	4730-277-2686	ADAPTER SF1012-6-8 (03925)	C	EA	1	*	*	*	*	*	*	*	*		
N	PAOZZ		UNION MALLEABLE IRON 1-2IN300NO (14959)	C	EA	1	*	*	*	*	*	*	*	*		
N	PAOZZ		REDUCER MALLEABLE IRON 3-8INX1-2IN300NO (14959)	C	EA	1	*	*	*	*	*	*	*	*		
N	PAOZZ	4730-288-6994	NIPPLE LONG: 2 1/2 IN. 3-4IN300LB (14959)	C	EA	6	*	*	*	*	*	*	*	*		
N	PAOZZ		ELBOW UNION: 90 DEG 890C3-4IN (14959)	C	EA	1	*	*	*	*	*	*	*	*		
N	PAOZZ	4730-922-5137	SWIVEL END HOSE 20642-12-12 (08752)	C	EA	2	*	*	*	*	*	*	*	*		
N	PAOZZ	4730-881-9539	FITTING HOSE 20142-12-12 (08752)	C	EA	2	*	*	*	*	*	*	*	*		

	(1) SMR CODE	(2) FEDERAL STOCK NUMBER	(3) DESCRIPTION REF NUMBER & MFR CODE	USABLE ON CODE	(4) UNIT OF MEAS	(5) QTY INC IN UNIT	(6) 30-DAY DS MAINT ALLOWANCE (a) 1-20	(b) 21-50	(c) 51-100	(7) 30-DAY GS MAINT ALLOWANCE (a) 1-20	(b) 21-50	(c) 51-100	(8) 1-YR ALW PER 100 EQUIP CNTGY	(9) DEPOT MAINT ALW PER 100 EQUIP	(10) ILLUSTRATION (a) FIG. NO.	(b) ITEM NO.
N	PAOZZ	4730-374-6948	FITTING HOSE: MALE PAN356-2-4 (03925)	C	EA	2	*	*	*	*	*	*	*	*		
N	PAOZZ	4730-995-8254	FITTING HOSE SWIVEL ASAN16-4-4 (03925)	C	EA	2	*	*	*	*	*	*	*	*		
N	PAOZZ	4730-628-3636	ELBOW: 90 DEG, 1/4 IN. SF1025-4-4 (03925)	C	EA	2	*	*	*	*	*	*	*	*		
N	PAOZZ	4730-195-1538	BUSHING REDUCING C3109X8X4 (79470)	C	EA	1	*	*	*	*	*	*	*	*		
N	PAOZZ	4730-203-3296	NIPPLE CLOSE: 3/8 IN. X 1 IN. WAN351 (81348)	C	EA	1	*	*	*	*	*	*	*	*		
N	PAOZZ		NIPPLE LONG 1-2INX4IN (14959)	C	EA	1	*	*	*	*	*	*	*	*		
N	PAOZZ	4730-802-8876	UNION C5305X8 (88344)	C	EA	4	*	*	*	*	*	*	*	*		
N	PAOZZ	4730-853-1182	CONNECTOR, O RING C5315X8 (88344)	C	EA	4	*	*	*	*	*	*	*	*		
	PAOZZ	4830-802-2818	CONNECTOR, PIPE: PRESSURE GAGE LINE 4-4QBTXS (08752)	A	EA	1	*	*	*	*	*	*	*	*		
			GROUP 62 - PUMP, STEERING													
	PAOHH	4320-115-8803	PUMP, HYDRAULIC: STEERING, LH V210-5-1C12L385 (62983) (COMPONENTS SAME AS PUMP, FSN 4320-115-8802)	A	EA	1	*	*	*	*	*	*	*	*	105	
	PAOHH	4320-115-8802	PUMP, HYDRAULIC: STEERING, RH V210-5-1C12385 (62983)	A	EA	1	*	*	*	*	*	*	*	*	105	
	PAHZZ	5305-359-4381	SCREW, CAP, HEXAGON HEAD: HYDRAULIC PUMP COVER 131485 (62983)	A	EA	4				*	*	*	*	*	105	1
	XDHZZ		COVER, HYDRAULIC PUMP 129343 (62983)	A	EA	1									105	2
N	PAOZZ	4730-540-4027	PLUG, HYDRAULIC PUMP: SCREEN 113000 (62983)	A	EA	1	*	*	*	*	*	*	*	*	105	3
	PAOZZ	2530-019-7502	SCREEN HYDRAULIC PUMP 183584 (62983)	A	EA	1	*	*	*	*	*	*	*	*	105	4
	PAHZZ	2530-292-4407	SPRING, PRESSURE PLATE: HYDRAULIC PUMP 114139 (62983)	A	EA	1				*	*	*	*	*	105	5
	PAHZZ	2590-355-4430	PLATE, PRESSURE: HYDRAULIC PUMP 292005 (62983)	A	EA	1				*	*	*	*	*	105	6
	KFHZZ		PACKING, PREFORMED: O RING, SEAL BODY AN6230-14 (88044) (PART OF KITS, FSN 3815-991-1639 AND 4320-215-1422)	A	EA	2									105	7
	KFHZZ		RING, HYDRAULIC: PUMP ROTOR 114173 (62983) (PART OF KIT, FSN 4320-215-1422)	A	EA	1									105	8
	KFHZZ		ROTOR, HYDRAULIC PUMP 172302 (62983) (PART OF KIT, FSN 4320-215-1422)	A	EA	1									105	9
	KFHZZ		VANE KIT, ROTOR: HYDRAULIC PUMP 912031 (62983) (PART OF KIT, FSN 4320-215-1422)	A	EA	1									105	10

(1) SMR CODE	(2) FEDERAL STOCK NUMBER	(3) DESCRIPTION REF NUMBER & MFR CODE	USABLE ON CODE	(4) UNIT OF MEAS	(5) QTY INC IN UNIT	(6) 30-DAY DS MAINT ALLOWANCE (a) 1-30	(b) 31-99	(c) 99-	(7) 30-DAY GS MAINT ALLOWANCE (a) 1-30	(b) 31-99	(c) 99-	(8) 1-YR ALW PER 100 EQUIP CNTGY	(9) DEPOT MAINT ALW PER 100 EQUIP	(10) ILLUSTRATION (a) FIG. NO.	(b) ITEM NO.
PAHZZ	5315-059-0119	PIN, PILOT: BODY ALIGNMENT 2161 (62983)	A	EA	2				•	•	•	•	•	105	11
XAHZZ		BODY, HYDRAULIC PUMP 119375 (62983)	A	EA	1									105	12
R PAHZZ	3110-516-5289	BEARING, HYDRAULIC PUMP: SHAFT 1703 (62983)	A	EA	1				•	•	•	•	•	105	13
KFHZZ		SEAL, BEARING, SHAFT 229236 (62983) (PART OF KIT, FSN 3815-991-1639)	A	EA	1									105	14
PAHZZ	2530-359-4445	SHAFT, HYDRAULIC PUMP 116644 (62983)	A	EA	1				•	•	•	•	•	105	15
PAHZZ	5315-264-3102	KEY, PUMP, SHAFT 5881 (62983)	A	EA	1				•	•	•	•	•	105	16
PAHZZ	3110-109-1123	BEARING, SHAFT: HYDRAULIC PUMP 98574 (62983)	A	EA	1				•	•	•	•	•	105	17
PAHZZ	5340-359-4042	RING, RETAINING: SNAP BEARING 109975 (62983)	A	EA	1				•	•	•	•	•	105	18
PAOZZ	5305-276-8457	SCREW, CAP, HEXAGON HEAD: PUMP MTG 1273 (62983)		EA	4	•	•	•	•	•	•	•	•	105	19
PAOHH	4320-115-8810	PUMP, HYDRAULIC: STEERING, RH V110-25-1C10S21 (62983) (COMPONENTS SAME AS PUMP, FSN 4320-115-8811)	BC	EA	1	•	•	•	•	•	•	•	•	106	
PAOHH	4320-115-8811	PUMP, HYDRAULIC: STEERING LH V110-25-1C10LS214 (62983)	BC	EA	1	•	•	•	•	•	•	•	•	106	
R PAOZZ	5305-276-8457	SCREW, CAP, HEXAGON HEAD: PUMP MTG 1273 (62983)	BC	EA	4	•	•	•	•	•	•	•	•	106	1
PAOZZ	5305-207-2240	SCREW, CAP, HEXAGON HEAD: COVER MTG 1276A (62983)	BC	EA	8	•	•	•	•	•	•	•	•	106	2
XDHZZ		COVER, PUMP 143439 (62983)	BC	EA	2									106	3
PAHZZ	5340-391-3733	SPRING, PRESSURE PLATE 91415 (62983)	BC	EA	1				•	•	•	•	•	106	4
PAHZZ	4320-462-2162	PLATE, PRESSURE 143383 (62983)	BC	EA	1				•	•	•	•	•	106	5
KFHZZ		PACKING, PREFORMED: COVER AND RING 143216 (62983) (PART OF KITS, FSN 4935-682-5328, 2530-607-3500 AND 4320-462-2168)	BC	EA	4									106	6
KFHZZ		RING, ROTOR 143559 (62983) (PART OF KITS, FSN 2530-607-3500 AND 4320-462-2168)	BC	EA	2									106	7
KFHZZ		ROTOR, PUMP 141393 (62983) (PART OF KITS, FSN 2530-607-3500 AND 4320-462-2168)	BC	EA	2									106	8
KFHZZ		VANE, KIT: ROTOR 912008 (62983) (PART OF KITS, FSN 2530-607-3500 AND 4320-462-2168)	BC	EA	2									106	9
PAHZZ	5315-458-2133	PIN, HOUSING 2461 (62983)	BC	EA	2				•	•	•	•	•	106	10
PAHZZ	5315-825-3535	KEY, SHAFT 142843 (62983)	BC	EA	2				•	•	•	•	•	106	11
R PAHZZ	5365-359-4042	RING, RETAINING: BEARING 109975 (62983)	BC	EA	2				•	•	•	•	•	106	12

(1) SMR CODE	(2) FEDERAL STOCK NUMBER	(3) DESCRIPTION REF NUMBER & MFR CODE	USABLE ON CODE	(4) UNIT OF MEAS	(5) QTY INC IN UNIT	(6) 30-DAY DS MAINT ALLOWANCE (a) 1-20	(b) 21-50	(c) 51-100	(7) 30-DAY GS MAINT ALLOWANCE (a) 1-20	(b) 21-50	(c) 51-100	(8) 1-YR ALW PER 100 EQUIP CNTGY	(9) DEPOT MAINT ALW PER 100 EQUIP	(10) ILLUSTRATION (a) FIG. NO.	(b) ITEM NO
PAMZZ	3110-109-1123	BEARING, BALL: SHAFT 98574 (62983)	BC	EA	2				•	•	•	•	•	106	13
PAMZZ	4320-462-2163	SHAFT, DRIVE 142916 (62983)	BC	EA	2				•	•	•	•	•	106	14
PAMZZ	5340-579-9994	SPACER, BEARING 141433 (62983)	BC	EA	2				•	•	•	•	•	106	15
KFMZZ		SEAL, PLAIN, ENCASED: BEARING 229236 (62983) (PART OF KIT, FSN 4935-682-5328)	BC	EA	2									106	16
PAMZZ	3110-198-1298	BEARING, BALL: SHAFT 1701 (62983)	BC	EA	2				•	•	•	•	•	106	17
XAMZZ		BODY, PUMP 143440 (62983)	BC	EA	2									106	18
PCMZZ	4320-215-1422	KIT, CARTRIDGE: HYDRAULIC PUMP 912064 (62983) (COMPONENTS SAME AS KIT, FSN 4320-462-2168)	A	EA	1				•	•	•	•	•	105	
PCMZZ	4320-462-2168	CARTRIDGE KIT, LEFT 912056L (62983)	BC	EA	1				•	•	•	•	•	106	
		2-PACKING												105	7
		1-RING												105	8
		1-ROTOR												105	9
		1-VANE												105	10
PCMZZ	3815-991-1639	KIT, SEAL: HYDRAULIC PUMP 922732 (62983)	A	EA	1				•	•	•	•	•	105	
		2-PACKING												105	7
		1-SEAL												105	14
PCMZZ	4935-682-5328	GASKET KIT: STEERING PUMP 922793 (62983)	BC	EA	1				•	•	•	•	•	106	
		2-PACKING												106	6
		1-SEAL												106	16
PCMZZ	2530-607-3500	CARTRIDGE KIT 912056 (62983)	BC	EA	1				•	•	•	•	•	106	
		2-PACKING												106	6
		1-RING												106	7
		1-ROTOR												106	8
		1-VANE												106	9
		GROUP 63 - PUMP DRIVE, COUPLING													
PAOZZ	5306-299-2367	BOLT, MACHINE: PUMP MTG, 3/8-16 THD SIZE, 1 1/4 IN. LG MILB857TYPE2GR2 (81349)	A	EA	2	•	•		•	•	•	•	•	107	1
PAOZZ	5306-579-1819	BOLT, MACHINE: ADAPTER MTG, 7/16-14 THD SIZE, 1 1/4 IN. LG MILB857TYPEBCLASSC (81348)	B	EA	1	•	•		•	•	•	•	•	107	2
PAOZZ	5306-424-7069	BOLT, MACHINE: ADAPTER MTG, 1/2-13 THD SIZE, 1 1/4 IN. LG FEDSPEC00B633FS1035 (81348)	A	EA	4	•	•		•	•	•	•	•	107	3
XDOZZ		ADAPTER, PAD, DRIVE: GEAR COVER 35242 (09608)	A	EA	1									107	4

(1) SMR CODE	(2) FEDERAL STOCK NUMBER	(3) DESCRIPTION REF NUMBER & MFR CODE	USABLE ON CODE	(4) UNIT OF MEAS	(5) QTY INC IN UNIT	(6) 30-DAY DS MAINT ALLOWANCE (a) 1-20	(b) 21-50	(c) 51-100	(7) 30-DAY GS MAINT ALLOWANCE (a) 1-20	(b) 21-50	(c) 51-100	(8) 1-YR ALW PER 100 EQUIP CNTGY	(9) DEPOT MAINT ALW PER 100 EQUIP	(10) ILLUSTRATION (a) FIG. NO.	(b) ITEM NO.
PAOZZ	5305-723-9384	SETSCREW: DRIVE GEAR, ALLEN HEAD, 1/4-20 THD SIZE, 7/16 IN. LG MS51963-66 (96906)	A	EA	1	*	*	*	*	*	*	*	*	107	5
PAOZZ	4320-235-1635	GEAR, ADAPTER: PUMP DRIVE 35243 (09608)	A	EA	1	*	*	*	*	*	*	*	*	107	6
PAOZZ	2930-672-6758	COUPLING, PUMP DRIVE: STEERING 3292492 (72582)		EA	1	*	*	*	*	*	*	*	*	107	7
PAOZZ	5306-143-2710	BOLT, MACHINE: PLATE DRIVE 5122921 (72582)	A	EA	4	*	*	*	*	*	*	*	*	107	8
PAOZZ	3020-541-1591	PLATE, INTERNAL, TEETH: PUMP DRIVE 5153449 (72582)	A	EA	1	*	*	*	*	*	*	*	*	107	9
XDOZZ		SPACER, GEAR: COUPLING DRIVE 5177026 (72582)	A	EA	1									107	10
		GROUP 64 - FILTERS, HYDRAULIC													
PAOZZ	4320-251-2138	FILTER, HYDRAULIC FLUID: STEERING RETURN LINE FB101 (02249)		EA	1	*	*	*	*	*	*	*	*	108	
PAOZZ	6685-068-2699	INDICATOR, COMPOUND: HYDRAULIC FILTER 1568 (02249)		EA	1	*	*	*	*	*	*	*	*	108	1
C PAOZZ	5310-126-5236	LOCKNUT: BY-PASS SCREW 1550 (02249)		EA	1	*	*	*	*	*	*	*	*	108	2
C PAOZZ	4820-233-7810	VALVE: BY-PASS RETAINER, LINE FILTER 1546 (02249)		EA	1	*	*	*	*	*	*	*	*	108	3
C PAOZZ	5305-456-7198	SCREW: BY-PASS SPRING 1549 (02249)		EA	1	*	*	*	*	*	*	*	*	108	4
PAOZZ	5360-236-3774	SPRING: BY-PASS VALVE 1547 (02249)		EA	1	*	*	*	*	*	*	*	*	108	5
C PAOZZ	5365-406-7793	SPACER: BY-PASS VALVE 1548 (02249)		EA	1	*	*	*	*	*	*	*	*	108	6
C PAOZZ	4320-779-2726	GUIDE: BY-PASS VALVE 1552 (02249)		EA	1	*	*	*	*	*	*	*	*	108	7
PAOZZ	3930-940-0634	FILTER, ELEMENT: 10 MICRON PAPER 1509 (02249)		EA	1	*	*	*	*	*	*	*	*	108	8
C PAOZZ	2940-977-0902	HEAD, CASTING: HYDRAULIC FILTER 1545 (02249)		EA	1	*	*	*	*	*	*	*	*	108	9
PAOZZ	4820-241-4428	FILTER, SUCTION: HYDRAULIC OIL TANK, STEERING SF215 (02249)	A	EA	1	*	*	*	*	*	*	*	*	109	1
XDOZZ		RING, RETAINING: SUCTION FILTER 1589 (02249)	A	EA	1									109	2
PAOZZ	2590-089-4450	SPRING, CONICAL: SUCTION FILTER 1563 (02249)	A	EA	1	*	*	*	*	*	*	*	*	109	3
PAOZZ	5310-843-3496	WASHER, SUCTION: FILTER, SPRING 1564 (02249)	A	EA	2	*	*	*	*	*	*	*	*	109	4
C PAOZZ	5310-071-3235	WASHER, FLAT: FILTER, WASHER 1565 (02249)	A	EA	2	*	*	*	*	*	*	*	*	109	5
PAOZZ	5305-152-0550	SCREW: BY-PASS VALVE, RETAINING 1578 (02249)	A	EA	1	*	*	*	*	*	*	*	*	109	6
PAOZZ	5310-151-8837	LOCKNUT: BY-PASS VALVE, SCREW 1579 (02249)	A	EA	1	*	*	*	*	*	*	*	*	109	7
PAOZZ	2520-891-1920	VALVE, BY-PASS 1573 (02249)	A	EA	1	*	*	*	*	*	*	*	*	109	8

(1) SMR CODE	(2) FEDERAL STOCK NUMBER	(3) DESCRIPTION REF NUMBER & MFR CODE	USABLE ON CODE	(4) UNIT OF MEAS	(5) QTY INC IN UNIT	(6) 30-DAY DS MAINT ALLOWANCE (a) 1-20	(b) 21-50	(c) 51-100	(7) 30-DAY GS MAINT ALLOWANCE (a) 1-20	(b) 21-50	(c) 51-100	(8) 1-YR ALW PER 100 EQUIP CNTGY	(9) DEPOT MAINT ALW PER 100 EQUIP	(10) ILLUSTRATION (a) FIG. NO.	(b) ITEM NO.
PAOZZ	3930-934-0501	CAP: BY-PASS VALVE, STEM 1574 (02249)	A	EA	1	*	*	*	*	*	*	*	*	109	9
PAOZZ	3930-900-5161	SPRING: BY-PASS VALVE 1571 (02249)	A	EA	1	*	*	*	*	*	*	*	*	109	10
PAOZZ	2590-089-4451	SPACER: BY-PASS VALVE 1569 (02249)	A	EA	1	*	*	*	*	*	*	*	*	109	11
PAOZZ		GUIDE: BY-PASS VALVE 1590 (02249)	A	EA	1	*	*	*	*	*	*	*	*	109	12
PAOZZ	4330-088-2056	FILTER, ELEMENT: SUCTION 1566 (02249)	A	EA	1	*	*	*	*	*	*	*	*	109	13
XDOZZ		BOLT, CENTER POST: 1 1/4 IN. NPTF 1591-125 (02249)	A	EA	1									109	14
		GROUP 65 - VALVES, STEERING													
PAFZZ	4820-410-1946	VALVE, CHECK: HYDRAULIC STEERING D0610A1 (24785)	BC	EA	1	*	*	*	*	*	*	*	*	110	
XDFZZ		PLUG 10-02774-02 (24785)	BC	EA	1									110	1
PCHZZ	5330-917-0876	PACKING, PREFORMED 82-20216-01 (24785)	BC	EA	1				*	*	*	*	*	110	2
XAFZZ		SPRING, CHECK VALVE 10-00159-02 (24785)	BC	EA	1									110	3
XAFZZ		POPPET, CHECK VALVE 10-04441-05 (24785)	BC	EA	1									110	4
XAFZZ		SEAT, CHECK VALVE 10-00922-02 (24785)	BC	EA	1									110	5
C PAOZZ	5305-253-5614	SCREW, THREAD FORMING: PLATE MTG MS21318-20 (96906)	BC	EA	4	*	*	*	*	*	*	4	*	110	6
C XDOZZ		PLATE, IDENTIFICATION 10-05139-03 (24785)	BC	EA	1									110	7
C XDOZZ		TAG, DIRECTION 10-05139-03 (24785)	BC	EA	1									110	8
XAFZZ		BODY, CHECK VALVE 10-07895-06 (24785)	BC	EA	1									110	9
XAFZZ		PLUG, PIPE: BODY 84-01342-05 (24785)	BC	EA	1									110	10
PAFZZ	4820-462-2164	VALVE, BY-PASS: STEERING COUNTER BALANCE SA5-175CK44 (24785)	BC	EA	2	*	*	*	*	*	*	*	*	111	
C PAHZZ	5305-983-6622	SCREW: SOCKET CAP HTG, 5/16-18 THD SIZE, 1 1/4 IN. LG MS16997-81 (96906)	BC	EA	6				*	*	*	*	*	111	1
C XAFZZ		CAP, BOTTOM 10-01246-03 (24785)	BC	EA	1									111	2
XAFZZ		PLUG, PIPE: 1/4 IN. 84-01311-03 (24785)	BC	EA	1									111	3
XDFZZ		PLUG 10-06601-01 (24785)	BC	EA	1									111	4
PCHZZ	5330-458-2086	PACKING, PREFORMED: RING 82-20007-01 (24785)	BC	EA	1				*	*	*	*	*	111	5
PCHZZ	5330-198-6179	PACKING, PREFORMED: RING AN6227-22 (88044)	BC	EA	1				*	*	*	*	*	111	6
PCHZZ	5330-458-2087	PACKING, PREFORMED: RING 82-20210-01 (24785)	BC	EA	2				*	*	*	*	*	111	7

(1)	(2)	(3)	(4)	(5)	(6) 30-DAY DS MAINT ALLOWANCE			(7) 30-DAY GS MAINT ALLOWANCE			(8)	(9)	(10) ILLUSTRATION	
SMR CODE	FEDERAL STOCK NUMBER	DESCRIPTION REF NUMBER & MFR CODE	USABLE ON CODE	UNIT OF MEAS	QTY INC IN UNIT	(a) 1-20	(b) 21-50	(c) 51-100	(a) 1-20	(b) 21-50	(c) 51-100	1-YR ALW PER 100 EQUIP CNTGY	DEPOT MAINT ALW PER 100 EQUIP	(a) FIG. NO.	(b) ITEM NO.
XAFZZ		SPRING, CHECK 10-00159-02 (24785)	BC	EA	1									111	8
XAFZZ		SPOOL, CHECK 10-00921-02 (24785)	BC	EA	1									111	9
XAFZZ		SPOOL, MAIN 10-01258-02 (24785)	BC	EA	1									111	10
C PAOZZ	5305-253-5614	SCREW, DRIVE: NO. 4 X 3/16 MS21318-20 (96906)	BC	EA	4	*	*	*	*	*	*	*	*	111	11
XDOZZ		PLATE, IDENTIFICATION 10-07524-04 (24785)	BC	EA	1									111	12
XDOZZ		PLATE, IDENTIFICATION 10-02632-02 (24785)	BC	EA	1									111	13
C XDOZZ		SETSCREW: KNOB MTG 83-11247-03 (24785)	BC	EA	1									111	14
XDOZZ		KNOB, ADJUSTING 10-04438-08 (24785)	BC	EA	1									111	15
C PAHZZ	5305-724-7210	SETSCREW: 1/2-13 X 3 IN. LG MS51963-147 (96906)	BC	EA	1				*	*	*	*	*	111	16
C PAHZZ	5310-899-9151	NUT: 1/2-13 IN. MS51967-13 (96906)	BC	EA	1				*	*	*	*	*	111	17
C PAHZZ	5305-983-5346	SETSCREW: 5/16-18 THD SIZE, 3/4 IN. LG MS16997-78 (96906)	BC	EA	4				*	*	*	*	*	111	18
PCHZZ	4820-815-2946	GASKET: CAP TO BODY 10-01256-02 (24785)	BC	EA	1				*	*	*	*	*	111	19
XAFZZ		SPRING, MAIN 10-02693-02 (24785)	BC	EA	1									111	20
XAFZZ		FOLLOWER, SPRING 10-02846-02 (24785)	BC	EA	1									111	21
XAFZZ		CAP, TOP 10-01245-04 (24785)	BC	EA	1									111	22
XAFZZ		SEAT AND STOP SPRING 10-06427-04 (24785)	BC	EA	1									111	23
C PAHZZ	5305-015-3006	SCREW, MACHINE, FILTER HEAD: NO. 6-32 THD SIZE, 3/8 IN. 83-16604-01 (24785)	BC	EA	1				*	*	*	*	*	111	24
C XAFZZ		BODY: 175 10-01243-03 (24785)	BC	EA	1									111	25
PAFZZ		VALVE, BALL: PUMP LINE STEERING 1-2-411YB (98991)	A	EA	7	*	*	*	*	*	*	*	*		
PAFZZ	4820-915-2753	VALVE, CHECK: HYDRAULIC, STEERING SYSTEM DC500 (91561)	A	EA	2	*	*	*	*	*	*	*	*		
PAFZZ	4820-241-4409	VALVE, RELIEF: HYDRAULIC, STEERING SYSTEM 1AR12F6-405 (96259)	A	EA	1	*	*	*	*	*	*	*	*		
PAFZZ	4820-235-3960	VALVE, FLOW CONTROL: HYDRAULIC, STEERING SYSTEM 2F12N4-4-3-2-55 (96259)	A	EA	1	*	*	*	*	*	*	*	*		
PAFZZ	4730-522-1898	STRAINER: 140 MICRON, STEERING J5-90-100-3-4NPTF (84276)	B	EA	2	*	*	*	*	*	*	*	*		
PAFZZ	4820-918-3613	VALVE, FLUID CONTROL: HYDRAULIC, STEERING 1EE13P4-305 (96259)	A	EA	1	*	*	*	*	*	*	*	*		

(1) SMR CODE	(2) FEDERAL STOCK NUMBER	(3) DESCRIPTION REF NUMBER & MFR CODE	USABLE ON CODE	(4) UNIT OF MEAS	(5) QTY INC IN UNIT	(6) 30-DAY DS MAINT ALLOWANCE (a) 1-20	(b) 21-50	(c) 51-100	(7) 30-DAY GS MAINT ALLOWANCE (a) 1-20	(b) 21-50	(c) 51-100	(8) 1-YR ALW PER 100 EQUIP CNTGY	(9) DEPOT MAINT ALW PER 100 EQUIP	(10) ILLUSTRATION (a) FIG. NO.	(b) ITEM NO.
		GROUP 66 - VALVE FLOW DIVIDER													
PAFZZ	2030-110-3446	FLOW DIVIDER: STEERING CFD50-3 (02249)	BC	EA	1	*	*	*	*	*	*	*	*	112	
XAFZZ		CAP, SPOOL, HOLLOW 1459 (02249)	BC	EA	1									112	1
PCFZZ	5330-887-0010	PACKING, PREFORMED: O RING 2707 (02249)	BC	EA	3	*	*	*	*	*	*	*	*	112	2
XAFZZ		SHIM, SPOOL SPRING 1448 (02249) (AS REQUIRED)	BC	EA										112	3
XAFZZ		GUIDE, SPOOL SPRING 1455 (02249)	BC	EA	1									112	4
XAFZZ		SPRING, SPOOL 1456 (02249)	BC	EA	1									112	5
XAFZZ		SPOOL, 3 GPM 1463 (02249)	BC	EA	1									112	6
C XAFZZ		CAP, SPOOL, SOLID 1458 (02249)	BC	EA	1									112	7
C XAFZZ		PLUG, PIPE: BODY 015 (02249)	BC	EA	1									112	8
XAFZZ		CAP, RELIEF 1449 (02249)	BC	EA	1									112	9
XAFZZ		SPRING, RELIEF 1450 (02249)	BC	EA	1									112	10
XAFZZ		SHIM, RELIEF 459 (02249)	BC	EA	1									112	11
XAFZZ		SHIM, RELIEF 458 (02249)	BC	EA	1									112	11
XAFZZ		GUIDE, RELIEF 1452 (02249)	BC	EA	1									112	12
XAFZZ		BALL, RELIEF 2504 (02249)	BC	EA	1									112	13
XAFZZ		SEAT, RELIEF 1454 (02249)	BC	EA	1									112	14
C PAFZZ		WASHER: O RING SET 1453 (02249)	BC	EA	1	*	*	*	*	*	*	*	*	112	15
PCFZZ	3830-929-0753	PACKING, PREFORMED: O RING 2503 (02249)	BC	EA	1	*	*	*	*	*	*	*	*	112	16
XAFZZ		HOUSING 1460 (02249)	BC	EA	1									112	17
N PAOZZ	5305-269-3218	SCREW, CAP, HEXAGON HEAD: STEERING FLOW DIVIDER MTG, 3/8-16 THD SIZE, 2 1/2 IN. LG MS90725-68 (96906)	C	EA	2	*	*	*	*	*	*	*	*	*	
N PAOZZ	5310-732-0558	NUT, PLAIN, HEXAGON: STEERING FLOW DIVIDER MTG, 3/8-16 THD SIZE MS51967-8 (96906)	C	EA	2	*	*	*	*	*	*	*	*	*	
N PAOZZ	5310-087-7493	WASHER, FLAT: STEERING FLOW DIVIDER MTG, 3/8 IN. SCREW SIZE MS27183-13 (96906)	C	EA	2	*	*	*	*	*	*	*	*	*	
N PAOZZ	5310-637-9541	WASHER, LOCK: STEERING FLOW DIVIDER MTG, 3/8 IN. SCREW SIZE MS35338-46 (96906)	C	EA	2	*	*	*	*	*	*	*	*	*	

(1) SMR CODE	(2) FEDERAL STOCK NUMBER	(3) DESCRIPTION REF NUMBER & MFR CODE	USABLE ON CODE	(4) UNIT OF MEAS	(5) QTY INC IN UNIT	(6) 30-DAY DS MAINT ALLOWANCE (a) 1-20	(b) 21-50	(c) 51-100	(7) 30-DAY GS MAINT ALLOWANCE (a) 1-20	(b) 21-50	(c) 51-100	(8) 1-YR ALW PER 100 EQUIP CNTGY	(9) DEPOT MAINT ALW PER 100 EQUIP	(10) ILLUSTRATION (a) FIG. NO.	(b) ITEM NO.
		GROUP 67 - CYLINDER, HYDRAULIC STEERING													
N PAOFF	2030-155-2910	CYLINDER STEERING BM2THR1177 (91940) (COMPONENTS SAME AS CYLINDER, FSN 2030-116-6664, EXCEPT WHERE INDIVIDUAL COMPONENTS ARE ANNOTATED)	BC	EA	2	*	*	*	*	*	*	*	*	113	
PAOFF	2030-116-6664	CYLINDER, HYDRAULIC STEERING BM5511S (91940)	A	EA	2	*	*	*	*	*	*	*	*	113	
PAOZZ	2030-113-9477	PIN, ASSEMBLY: CLEVIS, HYDRAULIC CYLINDER MTG A8658-12 (91940)		EA	2	*	*	*	*	*	*	*	*	113	1
C XDFZZ		CLEVIS, ROD: HYDRAULIC CYLINDER A82263 (91940) (USED ON CYLINDER, FSN 2030-116-6664, ONLY)	A	EA	1									113	2
N XDFZZ		STUD, ROD END: 3/4-16 X 2 5/8 IN. LG A504609 (91940) (USED ON CYLINDER, FSN 2030-155-2910, ONLY)	BC	EA	1									113	2
C XDFZZ		NUT, TIE ROD: HYDRAULIC CYLINDER A73-820 (91940)		EA	4									113	3
C XAFZZ		CARTRIDGE, PISTON ROD: BEARING A82503 (91940)		EA	1									113	4
C PAFZZ	5305-724-6798	SETSCREW: CARTRIDGE, NO. 10-32 THD SIZE, 1/4 IN. LG MS51964-49 (96906)		EA	1	*	*	*	*	*	*	*	*	113	5
PAFZZ	2030-113-9478	SLUG, CARTRIDGE: NYLON, 1/8 X 1/8 IN. 125THX125TH (91940)		EA	1	*	*	*	*	*	*	*	*	113	6
PCFZZ	2030-059-6606	RING, RETAINING: ROD, PACKING A08-187 (91940)		EA	1	*	*	*	*	*	*	*	*	113	7
PCFZZ	2030-059-6607	PACKING ASSEMBLY: V TYPE, PISTON ROD V63-6-4P (91940)		EA	1	*	*	*	*	*	*	*	*	113	8
PCFZZ	5330-245-9555	PACKING, PREFORMED: O RING, CARTRIDGE SEAL A26-033 (91940)		EA	1	*	*	*	*	*	*	*	*	113	9
R PAFZZ	5365-825-3280	RING, CARTRIDGE: O RING, SEAL RETAINER A27-033 (91940)		EA	1	*	*	*	*	*	*	*	*	113	10
PAFZZ	2030-059-6596	WIPER, PISTON ROD A8347-15 (91940)		EA	1	*	*	*	*	*	*	*	*	113	11
C XAFZZ		PLATE, CARTRIDGE RETAINER A8506 (91940)		EA	1									113	12
C XAFZZ		COVER, HEAD: ELECTRIC MOTOR DRIVEN STEER, HYDRAULIC, CYLINDER A82656 (91940) (USED ON CYLINDER, FSN 2030-116-6664, ONLY)	A	EA	1									113	13
C XAFZZ		COVER, HEAD END A8456 (91940) (USED ON CYLINDER, FSN 2030-155-2910, ONLY)	BC	EA	1									113	13
C PAFZZ	2030-708-3626	BEARING, ROD: HYDRAULIC CYLINDER A82519 (91940)		EA	1	*	*	*	*	*	*	*	*	113	14
PAOZZ	5305-235-2479	SCREW, CYLINDER BLEEDER A18623-1 (91940) (USED ON CYLINDER, FSN 2030-116-6664, ONLY)	A	EA	2	*	*	*	*	*	*	*	*	113	15

(1) SMR CODE	(2) FEDERAL STOCK NUMBER	(3) DESCRIPTION REF NUMBER & MFR CODE	USABLE ON CODE	(4) UNIT OF MEAS	(5) QTY INC IN UNIT	(6) 30-DAY DS MAINT ALLOWANCE (a) 1-20	(b) 21-50	(c) 51-100	(7) 30-DAY GS MAINT ALLOWANCE (a) 1-20	(b) 21-50	(c) 51-100	(8) 1-YR ALW PER 100 EQUIP CNTGY	(9) DEPOT MAINT ALW PER 100 EQUIP	(10) ILLUSTRATION (a) FIG. NO.	(b) ITEM NO.
PAOZZ	3110-100-6161	BEARING, BALL: 3/32 IN. DIA A8622 (91940) (USED ON CYLINDER, FSN 2030-116-6664, ONLY)	A	EA	2	*	*	*	*	*	*	*	*	113	16
C PCFZZ	2030-708-3628	PACKING, PISTON RINGS A8253-2 (91940)		EA	4	*	*	*	*	*	*	*	*	113	17
C PAFZZ	5305-253-7863	LOCKSCREW, PISTON RETAINER A82801 (91940)		EA	1	*	*	*	*	*	*	*	*	113	18
C PAFZZ	5330-245-9554	PACKING, PREFORMED: O RING, PISTON A01-714 (91940)		EA	1	*	*	*	*	*	*	*	*	113	19
C PCFZZ		PACKING, PREFORMED: O RING, NOSE CUSHION A01-717 (91940) (USED ON CYLINDER ASSEMBLY, FSN 2030-116-6664, ONLY)	A	EA	1	*	*	*	*	*	*	*	*	113	20
C XAFZZ		PISTON, HYDRAULIC CYLINDER A8212 (91940)		EA	1									113	21
C XAFZZ		CUSHION, NOSE: HEAD ENGINE A8533 (91940) (USED ON CYLINDER ASSEMBLY, FSN 2030-116-6664, ONLY)	A	EA	1									113	22
C XAFZZ		ROD, PISTON: 3/8 X 20 5/8 IN., NO. 30355 A509578 (91940) (USED ON CYLINDER, FSN 2030-116-6664, ONLY)	A	EA	1									113	23
N XAFZZ		ROD, PISTON AM8295 (91940) (USED ON CYLINDER, FSN 2030-155-2910, ONLY)	BC	EA	1									113	23
C PAFZZ	5305-247-4225	SCREW, SELF-LOCK: BALL, CHECK, CAP END A7009 (91940) (USED ON CYLINDER ASSEMBLY, FSN 2030-116-6664, ONOY)	A	EA	1	*	*	*	*	*	*	*	*	113	24
C PCFZZ	5330-975-2278	PACKING, PREFORMED: O RING, SCREW, CAP A01-701 (91940) (USED ON CYLINDER ASSEMBLY, FSN 2030-116-6664, ONLY)	A	EA	2	*	*	*	*	*	*	*	*	113	25
C PAFZZ	5360-235-2466	SPRING, BALL, CHECK: CAP, END A7463 (91940) (USED ON CYLINDER ASSEMBLY, FSN 2030-116-6664)	A	EA	1	*	*	*	*	*	*	*	*	113	26
C PAFZZ	3110-100-6162	BALL, BALL CHECK: CAP, END A40-11 (91940) (USED ON CYLINDER ASSEMBLY, FSN 2030-116-6664, ONLY)	A	EA	1	*	*	*	*	*	*	*	*	113	27
C PAFZZ	2030-113-9476	NEEDLE, CUSHION: ADJUSTING CAP A7008 (91940) (USED ON CYLINDER ASSEMBLY, FSN 2030-116-6664, ONLY)	A	EA	1	*	*	*	*	*	*	*	*	113	28
C XAFZZ		COVER, CAP, END: HYDRAULIC CYLINDER A82931 (91940) (USED ON CYLINDER ASSEMBLY, FSN 2030-116-6664, ONLY)	A	EA	1									113	29
N XAFZZ		COVER, CAP, END A8072 (91940) (USED ON CYLINDER, FSN 2030-155-2910, ONLY)	BC	EA	1									113	29
C XAFZZ		CYLINDER, HYDRAULIC: 3/16 WALL X 2 PTOO5 BR A8154 (91940)		EA	1									113	30
C PCFZZ	5330-245-9628	PACKING, PREFORMED: O RING, END COVER A02-302 (91940)		EA	2	*	*	*	*	*	*	*	*	113	31

(1) SMR CODE	(2) FEDERAL STOCK NUMBER	(3) DESCRIPTION REF NUMBER & MFR CODE	USABLE ON CODE	(4) UNIT OF MEAS	(5) QTY INC IN UNIT	(6) 30-DAY DS MAINT ALLOWANCE (a) 1-20	(b) 21-50	(c) 51-100	(7) 30-DAY GS MAINT ALLOWANCE (a) 1-20	(b) 21-50	(c) 51-100	(8) 1-YR ALW PER 100 EQUIP CNTGY	(9) DEPOT MAINT ALW PER 100 EQUIP	(10) ILLUSTRATION (a) FIG. NO.	(b) ITEM NO.
C PAFZZ	5330-245-9630	RING; O RING RETAINER, CAP, END A04-402 (91940)		EA	2	*	*	*	*	*	*	*	*	113	32
C XDFZZ		TIE ROD; HYDRAULIC CYLINDER A83109 (91940)		EA	4									113	33
		GROUP 68 - TANK, HYDRAULIC													
XDFFF		TANK, OIL; 10 GALLON, HYDRAULIC STEERING SYSTEM H0106400 (09608)	A	EA	1									114	1
PAFFF		GAGE, SIGHT; HYDRAULIC, OIL TANK H0144 (09608)	A	EA	1	*	*	*	*	*	*	*	*	114	2
XDFZZ		RESERVOIR ASSEMBLY; HYDRAULIC STEERING TK200588 (99066)	A	EA	1									115	1
XDFZZ		BRACKET, MOUNTING BK200429 (99066)	B	EA	2									115	2
XDFZZ		RESERVOIR, HYDRAULIC FLUID TK200593 (99066)	A	EA	1									115	3
PAOZZ	2990-897-2612	BREATHER BV200567 (99066)	B	EA	1	*	*	*	*	*	*	*	*	115	4
R PAOZZ	2990-457-0162	SCREEN, STRAINER SN200568 (99066)	B	EA	1	*	*	*	*	*	*	*	*	115	5
R PAOZZ	4730-352-9414	PLUG, PIPE; DRAIN PG7628 (99066)	B	EA	1	*	*	*	*	*	*	*	*	115	6
PAFFF	6680-477-6113	SIGHT, GLASS, FLUID LEVEL 8575T (26196)	B	EA	2	*	*	*	*	*	*	*	*	116	1
XDFZZ		NUT, PLAIN, HEXAGON; PLATE MTG 8575-9 (26196)	B	EA	2									116	2
XDFZZ		SCREW, CAP, SHOULDER; PLATE MTG 8575-2 (26196)	B	EA	2									116	3
PCFZZ	5330-458-2088	PACKING, PREFORMED; SHOULDER SCREW 8575-6 (26196)	B	EA	2	*	*	*	*	*	*	*	*	116	4
XAFZZ		FRAME, SIGHT, GLASS 8575-1 (26196)	B	EA	1									116	5
R PAFZZ	5330-168-5546	GASKET; FRONT 8575-11 (26196)	B	EA	1	*	*	*	*	*	*	*	*	116	6
PAFZZ	6680-477-6114	WINDOW, FLEXIGLASS 8575-3 (26196)	B	EA	1	*	*	*	*	*	*	*	*	116	7
PCFZZ		GASKET; REAR 8575-4 (26196)	B	EA	1	*	*	*	*	*	*	*	*	116	8
XAFZZ		PLATE, BACKING; WITH THERMOMETER 8575-5C (26196)	B	EA	1									116	9
N XDFFF		TANK HYDRAULIC RESERVOIR 145-4510943 (80064)	C	EA	1									117	1
N PAOZZ		PLUG, DRAIN TANK 388 (26403)	C	EA	1	*	*	*	*	*	*	*	*	117	2
N PAFZZ	6680-922-0928	GAGE, TEMPERATURE AND LEVEL TANK 8575TNON (26196)	C	EA	1	*	*	*	*	*	*	*	*	117	3
N PAOZZ	2030-223-3233	CAP, FILL TANK A100 (8A276)	C	EA	1	*	*	*	*	*	*	*	*	117	4
N PAOZZ	5305-702-4523	SCREW, CAP, HEXAGON HEAD; INSPECTION PLATE, 1/4-20 THD SIZE, 3/4 IN. LG MS35307-306 (96906)	C	EA	38	*	*	*	*	*	*	*	*	117	5
N XDOZZ		PLATE INSPECTION 145-4510943-2 (80064)	C	EA	1									117	6

(1) SMR CODE	(2) FEDERAL STOCK NUMBER	(3) DESCRIPTION REF NUMBER & MFR CODE	USABLE ON CODE	(4) UNIT OF MEAS	(5) QTY INC IN UNIT	(6) 30-DAY DS MAINT ALLOWANCE (a) 1-20	(b) 21-50	(c) 51-100	(7) 30-DAY GS MAINT ALLOWANCE (a) 1-20	(b) 21-50	(c) 51-100	(8) 1-YR ALW PER 100 EQUIP CNTGY	(9) DEPOT MAINT ALW PER 100 EQUIP	(10) ILLUSTRATION (a) FIG. NO.	(b) ITEM NO.
														117	7
N MOOZZ		GASKET, NEOPRENE 145-45109A3-10 (80064) MANUFACTURE FROM:	C	EA	1										
														117	
N PCOZZ	5330-839-4909	GASKET, AS REQUIRED		YD		*	*	*	*	*	*				
														117	8
N XDOZZ		NUT INSERT TANK 9504-08 (19738)	C	EA	38										
PAOZZ	2520-225-7212	BREATHER, FILLER: HYDRAULIC RESERVOIR A100 (12190)	B	EA	2	*	*	*	*	*	*	*	*		
R PAOZZ	2990-477-6115	CAP, BREATHER A100-1 (12190)	BC	EA	2	*	*	*	*	*	*	*	*		
XDOZZ		ADAPTER A100-2 (12190)	BC	EA	2										
PAOZZ	2990-477-6116	SCREEN, BREATHER A100-3 (12190)	BC	EA	2	*	*	*	*	*	*	*	*		
PCOZZ	2990-477-6117	GASKET: FILLER A100-4 (12190)	BC	EA	2	*	*	*	*	*	*	*	*		
		GROUP 69 - PIPING, HYDRAULIC RAMP HOIST													
MOOZZ		HOSE ASSEMBLY: OIL CHECK VALVE TO PUMP, 36 IN. LG MHC62-13 (98042) MANUFACTURE FROM:	A	EA	1									118	1
PCOZZ	4720-052-4959	HOSE, AS REQUIRED 1509-16 (01276)		FT		*	*	*	*	*	*	*		118	
PAOZZ		FITTING, 1 EA 4722-16S (01276)		EA		*	*	*	*	*	*	*		118	
PAOZZ	4730-682-7088	FITTING, 1 EA 4790-16S (01276)		EA		*	*	*	*	*	*	*		118	
MOOZZ		HOSE ASSEMBLY: OIL, PUMP TO TEE, 48 IN. LG MHC62023 (98042) MANUFACTURE FROM:	A	EA	1									118	2
PCOZZ	4720-459-2784	HOSE, AS REQUIRED D724 (30327)		FT		*	*	*	*	*	*	*		118	
PAOZZ	4730-547-0952	FITTING, 1 EA CB24-24BN (30327)		EA		*	*	*	*	*	*	*		118	
PAOZZ		COUPLING, 1 EA CB24-24PA (30327)		EA		*	*	*	*	*	*	*		118	
MOOZZ		HOSE ASSEMBLY: RELIEF VALVE OUTLET, 32 IN. LG MHC62-45 (98042) MANUFACTURE FROM:	A	EA	1									118	3
PCOZZ		HOSE, AS REQUIRED 1509-20 (01276)		FT		*	*	*	*	*	*	*		118	
PCOZZ		FITTING, 2 EA 4722-20-20S (01276)		EA		*	*	*	*	*	*	*		118	
MOOZZ		HOSE ASSEMBLY: RELIEF VALVE INLET, 36 IN. LG MHC62-46 (98042) MANUFACTURE FROM:	A	EA	1									118	4
PCOZZ		HOSE, AS REQUIRED 1509-20 (01276)		FT		*	*	*	*	*	*	*		118	
PAOZZ	4730-547-0952	FITTING, 2 EA 4722-20-20S (01276)		EA		*	*	*	*	*	*	*		118	

(1) SMR CODE	(2) FEDERAL STOCK NUMBER	(3) DESCRIPTION REF NUMBER & MFR CODE	USABLE ON CODE	(4) UNIT OF MEAS	(5) QTY INC IN UNIT	(6) 30-DAY DS MAINT ALLOWANCE (a) 1-20	(b) 21-50	(c) 51-100	(7) 30-DAY GS MAINT ALLOWANCE (a) 1-20	(b) 21-50	(c) 51-100	(8) 1-YR ALW PER 100 EQUIP CNTGY	(9) DEPOT MAINT ALW PER 100 EQUIP	(10) ILLUSTRATION (a) FIG. NO.	(b) ITEM NO.
MOOZZ		HOSE ASSEMBLY: RAMP CONTROL VALVE, 21 IN. LG MMC62-53 (98042) MANUFACTURE FROM:	A	EA	1									118	5
PCOZZ		HOSE, AS REQUIRED 1509-20 (01276)		FT		*	*	*	*	*	*			118	
PAOZZ	4730-547-0952	FITTING, 2 EA 4722-20-20S (01276)		EA		*	*	*	*	*	*			118	
MOOZZ		HOSE ASSEMBLY: RAMP CONTROL VALVE, 24 IN. LG MMC62-54 (98042) MANUFACTURE FROM:	A	EA	1									118	6
PCOZZ		HOSE, AS REQUIRED 1509-20 (01276)		FT		*	*	*	*	*	*			118	
PAOZZ	4730-547-0952	FITTING, 2 EA 4722-20-20S (01276)		EA		*	*	*	*	*	*			118	
MOOZZ		HOSE ASSEMBLY: RAMP CONTROL VALVE, 28 IN. LG MMC62-55 (98042) MANUFACTURE FROM:	A	EA	1									118	7
PCOZZ		HOSE, AS REQUIRED 1509-20 (01276)		FT		*	*	*	*	*	*			118	
PAOZZ	4730-547-0952	FITTING, 2 EA 4722-20-20S (01276)		EA		*	*	*	*	*	*			118	
MOOZZ		HOSE ASSEMBLY: RAMP CONTROL VALVE, 28 IN. LG MMC62-56 (98042) MANUFACTURE FROM:	A	EA	1									118	8
PCOZZ	4720-459-2787	HOSE, AS REQUIRED D724 (30327)		FT		*	*	*	*	*	*			118	
PAOZZ		FITTING, 2 EA CB24-24MB (30327)		EA		*	*	*	*	*	*			118	
MOOZZ		HOSE, RUBBER, WIRE BRAID: WINCH RETURN LINE MANUFACTURE FROM:	A	EA	1									118	9
PCOZZ	4720-057-8612	HOSE, AS REQUIRED 2651-12 (01276)		FT		*	*	*	*	*	*			118	
MOOZZ		HOSE, RUBBER, WIRE BRAID: WINCH SUPPLY LINE MMC62-87 (98042) MANUFACTURE FROM:	A	EA	1									118	10
PCOZZ		HOSE, AS REQUIRED 1509-20 (01276)		FT		*	*	*	*	*	*			118	
PAOZZ	4730-908-6274	CLAMP, HOSE MS35842-16 (96906)	A	EA	2	*	*	*	*	*	*	*	*	118	11
MOOZZ		HOSE: TRUNK LINE, 5 1/2 IN. ID MMC62-93 (98042) MANUFACTURE FROM:	A	EA	1									118	12
PAOZZ	4720-289-6060	HOSE, AS REQUIRED ZZHA28TYPE1GRADEACLASS2 (81348)		FT		*	*	*	*	*	*			118	
XDOZZ		UNION: 90 DEG, ELBOW SWIVEL, PUMP OUTLET 60UA16X16 (30327)	A	EA	1									118	13
XDOZZ		NIPPLE, ADAPTER: PUMP VALVE OUTLET 2083-20X16S (01276)	A	EA	1									118	14
XDOZZ		CONNECTOR, FEMALE: PUMP VALVE OUTLET 20BGTXS (08752)	A	EA	1									118	15
XDFZZ		TEE, PIPE: PUMP CROSS LINE 3709X24 (79470)	A	EA	1									118	16

(1) SMR CODE	(2) FEDERAL STOCK NUMBER	(3) DESCRIPTION REF NUMBER & MFR CODE	USABLE ON CODE	(4) UNIT OF MEAS	(5) QTY INC IN UNIT	(6) 30-DAY DS MAINT ALLOWANCE (a) 1-20	(b) 21-50	(c) 51-100	(7) 30-DAY GS MAINT ALLOWANCE (a) 1-20	(b) 21-50	(c) 51-100	(8) 1-YR ALW PER 100 EQUIP CNTGY	(9) DEPOT MAINT ALW PER 100 EQUIP	(10) ILLUSTRATION (a) FIG. NO.	(b) ITEM NO.
XDFZZ		BUSHING, PIPE: PUMP CROSS LINE 3124-20 (79470)	A	EA	1									118	17
XDFZZ		CONNECTOR, MALE: PUMP CROSS LINE 20FBTXS (08752)	A	EA	1									118	18
XDFZZ		CONNECTOR, MALE: PUMP CROSS LINE 24PBTXS (08752)	A	EA	1									118	19
XDFZZ		UNION, SWIVEL: PUMP INLET LINE 60SA24X24 (30327)	A	EA	1									118	20
XDFZZ		UNION, SWIVEL: 90 DEG, ELBOW, PUMP INLET LINE 60UG24X24 (30327)	A	EA	1									118	21
HOOZZ		GASKET: FLAT RING, HOSE FLANGE MMC62-32 (98042) MANUFACTURE FROM:	A	EA	1									118	22
PCOZZ	5330-291-3933	PAPER, AS REQUIRED		YD		*	*	*	*	*	*			118	
HOOZZ		GASKET: FLAT RING, HOSE FLANGE MMC62-33 (98042) MANUFACTURE FROM:	A	EA	1									118	23
PCOZZ	5330-291-3933	PAPER, AS REQUIRED		YD		*	*	*	*	*	*			118	
XDOZZ		UNION, SWIVEL: 90 DEG, ELBOW, HYDRAULIC LINE 60UA20X20 (30327)	A	EA	1									118	24
XDOZZ		BUSHING, PIPE: CONTROL VALVE 2081-24X20S (01276)	A	EA	1									118	25
XDOZZ		CONNECTOR, FEMALE: RELIEF VALVE 24QBTXS (08752)	A	EA	1									118	26
XDOZZ		UNION: 45 DEG, SWIVEL, CONTROL VALVE 60TG20X20 (30327)	A	EA	1									118	27
XDOZZ		UNION, SWIVEL: WINCH LINE 60SG20X20 (30327)	A	EA	1									118	28
XDOZZ		UNION, SWIVEL: CONTROL VALVE 60SG24X24 (30327)	A	EA	1									118	29
XDOZZ		UNION: 90 DEG, ELBOW, MALE, FILTER INLET 28CBTXS (08752)	A	EA	1									118	30
XDOZZ		UNION: 90 DEG, ELBOW, FILTER INLET 28EBTXS (08752)	A	EA	1									118	31
XDFZZ		UNION: 90 DEG, ELBOW, TANK INLET 12CBTXS (08752)	A	EA	1									118	32
XDFZZ		UNION: 90 DEG, ELBOW, TANK INLET 12EBTXS (08752)	A	EA	1									118	33
XDFZZ		UNION: 90 DEG, ELBOW, FEMALE, CONTROL VALVE INLET 24DBTXS (08752)	A	EA	1									118	34
XDFZZ		UNION: 90 DEG, ELBOW, FEMALE, CONTROL VALVE OUTLET 28DBTXS (08752)	A	EA	1									118	35
XDOZZ		FITTING, HOSE: WINCH LINE 4722-20-20S (01276)	A	EA	1									118	36
XDOZZ		UNION, SWIVEL: WINCH LINE 60SA20X20 (30327)	A	EA	1									118	37
XDFZZ		UNION: 90 DEG, ELBOW, WINCH LINE 24EBTXS (08752)	A	EA	1									118	38
XDOZZ		FITTING, HOSE: WINCH LINE 4A12-12-12S (01276)	A	EA	1									118	39
XDFZZ		UNION, SWIVEL: WINCH LINE 60SG12-12 (30327)	A	EA	1									118	40

(1) SMR CODE	(2) FEDERAL STOCK NUMBER	(3) DESCRIPTION REF NUMBER & MFR CODE	USABLE ON CODE	(4) UNIT OF MEAS	(5) QTY INC IN UNIT	(6) 30-DAY DS MAINT ALLOWANCE (a) 1-20	(b) 21-50	(c) 51-100	(7) 30-DAY GS MAINT ALLOWANCE (a) 1-20	(b) 21-50	(c) 51-100	(8) 1-YR ALW PER 100 EQUIP CNTGY	(9) DEPOT MAINT ALW PER 100 EQUIP	(10) ILLUSTRATION (a) FIG. NO.	(b) ITEM NO.
PAOZZ	4730-802-2815	CONNECTOR, FEMALE: PRESSURE GAGE PANEL 4-4G8TXS (08752)	A	EA	1	*	*	*	*	*	*	*	*	118	41
PAFZZ	4730-993-7764	UNION: 90 DEG, ELBOW, PRESSURE GAGE LINE 4EBTXS (08752)	A	EA	1	*	*	*	*	*	*	*	*	118	42
XDFZZ		CONNECTOR, MALE: PRESSURE GAGE LINE 4-4FBTXS (08752)	A	EA	1									118	43
MFFZZ		TUBE, PRESSURE GAGE LINE MMC62-81 (98042) MANUFACTURE FROM:	A	EA	1									118	44
PAFZZ	4710-278-8096	TUBE, AS REQUIRED		FT		*	*	*	*	*	*			118	
PAOZZ	6685-087-6925	GAGE, PRESSURE: 2 1/2 IN., 0-3000 PSI TYPE5PATDMF (38508)	A	EA	1	*	*	*	*	*	*	*	*	118	45
MFFZZ		TUBE: 30 LEFT FRONT, TANK INLET MMC62-82 (98042) MANUFACTURE FROM:	A	EA	1									118	46
PAFZZ	4710-278-1952	TUBE, AS REQUIRED		FT		*	*	*	*	*	*			118	
MFFZZ		TUBE: 12 LEFT FRONT, PUMP CROSS LINE MMC62-83 (98042) MANUFACTURE FROM:	A	EA	1									118	47
PAFZZ		TUBE, AS REQUIRED MILT8506COMP304 (81349)		FT		*	*	*	*	*	*			118	
MFFZZ		TUBE, HOLE: PUMP OUTLET MMC62-84 (98042) MANUFACTURE FROM:	A	EA	1									118	48
PAFZZ		TUBE, AS REQUIRED MILT8506COMP304 (81349)		FT		*	*	*	*	*	*			118	
MFFZZ		TUBE: 12 LEFT FRONT, TANK RETURN LINE MMC62-85 (98042) MANUFACTURE FROM:	A	EA	1									118	49
PAFZZ		TUBE, AS REQUIRED MILT8506COMP304 (81349)		FT		*	*	*	*	*	*			118	
XDOZZ		UNION, ELBOW SWIVEL: WINCH TO LINE 60UA08X12 (30327)	C	EA	1									118	50
PAFZZ	4730-849-7155	UNION, TUBE: 3/4 IN. TANK RETURN LINE 12HBTXS (08752)	A	EA	1	*	*	*	*	*	*	*	*	118	51
XDFZZ		UNION, SWIVEL: TANK LINE 60SA08-12 (30327)	A	EA	1									118	
MOOZZ		GASKET: 1/8 IN. THK, TRUNK LINE MMC62-95 (98042) MANUFACTURE FROM:	A	EA	1									118	
PCOZZ	5330-261-5761	RUBBER, AS REQUIRED		FT		*	*	*	*	*	*			118	
MOOZZ		HOSE ASSEMBLY: WINCH HOSE 72-6-229 (26571) MANUFACTURE FROM:	B	EA	1									119	1
PCOZZ	4720-252-5431	HOSE, AS REQUIRED 216R20 (03925)		FT		*	*	*	*	*	*			119	
PAOZZ	4720-252-5431	COUPLING, 1 EA PHN20 (03925)		EA		*	*	*	*	*	*			119	
PAOZZ		COUPLING, 1 EA S90A20 (03925)		EA		*	*	*	*	*	*			119	

(1) SMR CODE	(2) FEDERAL STOCK NUMBER	(3) DESCRIPTION REF NUMBER & MFR CODE	USABLE ON CODE	(4) UNIT OF MEAS	(5) QTY INC IN UNIT	(6) 30-DAY DS MAINT ALLOWANCE (a) 1-20	(b) 21-50	(c) 51-100	(7) 30-DAY GS MAINT ALLOWANCE (a) 1-20	(b) 21-50	(c) 51-100	(8) 1-YR ALW PER 100 EQUIP CNTGY	(9) DEPOT MAINT ALW PER 100 EQUIP	(10) ILLUSTRATION (a) FIG. NO.	(b) ITEM NO.
MOOZZ		HOSE ASSEMBLY: WINCH HOSE 72-7-229 (26571) MANUFACTURE FROM:	B	EA	1									119	2
PCOZZ		HOSE, AS REQUIRED 216R20 (03925)		FT		*	*	*	*	*	*			119	
PAOZZ		COUPLING, 1 EA PM20 (03925)		EA		*	*	*	*	*	*			119	
PAOZZ		COUPLING, 1 EA 345A20 (03925)		EA		*	*	*	*	*	*			119	
MOOZZ		HOSE ASSEMBLY: HAND PUMP 72-24-229 (26571) MANUFACTURE FROM:	B	EA	1									119	3
PCOZZ		HOSE, AS REQUIRED 225R5 (03925)		FT		*	*	*	*	*	*			119	
PCOZZ		COUPLING, 1 EA PM4 (03925)		EA		*	*	*	*	*	*			119	
MOOZZ		HOSE ASSEMBLY: WINCH VALVE 72A26-229 (26571) MANUFACTURE FROM:	B	EA	1									119	4
PCOZZ		HOSE, AS REQUIRED 225R5 (03925)		FT		*	*	*	*	*	*			119	
PAOZZ		COUPLING, 1 EA PM4 (03925)		EA		*	*	*	*	*	*			119	
MOOZZ		HOSE ASSEMBLY: WINCH VALVE 72A27-229 (26571) MANUFACTURE FROM:	B	EA	1									119	5
PCOZZ		HOSE, AS REQUIRED 225R5 (03925)		FT		*	*	*	*	*	*			119	
PAOZZ		COUPLING, 1 EA PM4 (03925)		EA		*	*	*	*	*	*			119	
MOOZZ		HOSE ASSEMBLY: PUMP TO TANK 72A33-229 (26571) MANUFACTURE FROM:	B	EA	1									119	6
PCOZZ		HOSE, AS REQUIRED 221R32 (03925)		EA		*	*	*	*	*	*			119	
PAOZZ		COUPLING, 1 EA PM32 (03925)		EA		*	*	*	*	*	*			119	
PAOZZ		COUPLING, 1 EA AS32 (03925)		EA		*	*	*	*	*	*			119	
MOOZZ		HOSE ASSEMBLY: PUMP TO TANK 72A34-229 (26571) MANUFACTURE FROM:	B	EA	1									119	7
PCOZZ		HOSE, AS REQUIRED 221R32 (03925)		FT		*	*	*	*	*	*			119	
PAOZZ		COUPLING, 1 EA PM32 (03925)		EA		*	*	*	*	*	*			119	
PAOZZ		COUPLING, 1 EA AS32 (03925)		EA		*	*	*	*	*	*			119	
MOOZZ		HOSE, ASSEMBLY: PUMP TO CROSS LINE 72A41-229 (26571) MANUFACTURE FROM:	B	EA	1									119	8
PCOZZ		HOSE, AS REQUIRED 216R20 (03925)		FT		*	*	*	*	*	*			119	
PAOZZ	4720-252-5431	COUPLING, 1 EA PM20 (03925)		EA		*	*	*	*	*	*			119	

	(1) SMR CODE	(2) FEDERAL STOCK NUMBER	(3) DESCRIPTION REF NUMBER & MFR CODE	USABLE ON CODE	(4) UNIT OF MEAS	(5) QTY INC IN UNIT	(6) 30-DAY DS MAINT ALLOWANCE (a) 1-20	(b) 21-50	(c) 51-100	(7) 30-DAY GS MAINT ALLOWANCE (a) 1-20	(b) 21-50	(c) 51-100	(8) 1-YR ALW PER 100 EQUIP CNTGY	(9) DEPOT MAINT ALW PER 100 EQUIP	(10) ILLUSTRATION (a) FIG. NO.	(b) ITEM NO.
	MOOZZ		HOSE ASSEMBLY: PUMP TO CROSS LINE 72A42-229 (26571) MANUFACTURE FROM:	B	EA	1									119	9
	PCOZZ		HOSE, AS REQUIRED 216R20 (03925)		FT		*	*	*	*	*	*			119	
	PAOZZ	4720-252-5431	COUPLING, 1 EA PHN20 (03925)		EA		*	*	*	*	*	*			119	
	MOOZZ		HOSE ASSEMBLY: CONTROL VALVE LINE 72851-229 (26571) MANUFACTURE FROM:	B	EA	1									119	10
	PCOZZ		HOSE, AS REQUIRED 216R20 (03925)		FT		*	*	*	*	*	*			119	
	PAOZZ	4720-252-5431	COUPLING, 1 EA PHN20 (03925)		EA		*	*	*	*	*	*			119	
	PAOZZ		ADAPTER, 1 EA 16M20UFS (08752)		EA		*	*	*	*	*	*			119	
	XDFZZ		COUPLING: WINCH LINE, 1 1/4 IN. 21011-4IN (00986)	B	EA	1									119	11
	XDFZZ		COUPLING: ENGINE ROOM LINE, 90 DEG, 1/4 IN. 2160 (92959)	B	EA	1									119	12
	XDOZZ		ADAPTER, SWIVEL: WINCH CONNECTOR, 1/4 IN. 1037-4-4 (03925)	B	EA	1									119	13
	XDFZZ		ADAPTER, PIPE TEE: WINCH LINE 72-14-229 (26571)	B	EA	1									119	14
	XDFZZ		ADAPTER: 90 DEG, ELL, HAND PUMP LINE, 1 IN. 2111 (92959)	B	EA	1									119	15
	XDFZZ		COUPLING, PIPE: HAND PUMP HOSE, 1/4 IN. 2117 (92959)	B	EA	1									119	16
	XDFZZ		UNION: 1 1/4 IN. 2188 (92959)	B	EA	1									119	17
	XDOZZ		ADAPTER: PUMP HOSE, NO. 32 1013-32-32 (03925)	B	EA	1									119	18
	XDFZZ		FITTING, TEE 2114 (92959)	B	EA	1									119	19
	XDFZZ		ELBOW, PIPE TO TUBE: PUMP OUTLET, 3/8 IN. C5405-6-6 (79470)	B	EA	1									119	20
N	PAOZZ		U BOLT: 1 1/4 IN. 137-1-1-4IN (26403)	C	EA	10	*	*	*	*	*	*	*	*	120	1
N	MFFZZ		PIPE, SEAMLESS 516-4510941-59 (80064) MANUFACTURE FROM:	C	EA	1									120	2
N	PAFZZ		PIPE, 2 IN. SCHEDULE 40, 1 FT REQUIRED MIL20157TYPEE (81349)		FT		*	*	*	*	*	*			120	
N	PAFZZ	4730-880-0035	KIT, PORT, FLANGE: 2 IN. PF4200 (02249)	C	EA	4	*	*	*	*	*	*	*	*	120	3
N	XDFZZ		ELBOW: 90 DEG 15021N90DEG (14959)	C	EA	7									120	4
N	MFFZZ		PIPE, SEAMLESS 516-4510941-22 (80064) MANUFACTURE FROM:	C	EA	1									120	5
N	PAFZZ		PIPE, 2 IN. SCHEDULE 40, SEAMLESS, 1 FT REQUIRED MILT20157TYPEE (81349)		FT		*	*	*	*	*	*			120	

(1) SMR CODE	(2) FEDERAL STOCK NUMBER	(3) DESCRIPTION REF NUMBER & MFR CODE	USABLE ON CODE	(4) UNIT OF MEAS	(5) QTY INC IN UNIT	(6) 30-DAY DS MAINT ALLOWANCE (a) 1-20	(b) 21-50	(c) 51-100	(7) 30-DAY GS MAINT ALLOWANCE (a) 1-20	(b) 21-50	(c) 51-100	(8) 1-YR ALW PER 100 EQUIP CNTGY	(9) DEPOT MAINT ALW PER 100 EQUIP	(10) ILLUSTRATION (a) FIG. NO.	(b) ITEM NO.
N XDFZZ		UNION: 2 IN. 819E (14959)	C	EA	1									120	6
N MFFZZ		PIPE, SEAMLESS: 1 1/4 IN., SCHEDULE 80 516-45109A1-83 (80064) MANUFACTURE FROM:	C	EA	1									120	7
N PAFZZ		PIPE, 1 1/4 IN., SCHEDULE 80, 4 FT, 1 IN. REQUIRED MILT20157TYPEE (81349)		FT		*	*	*	*	*	*			120	
N XDFZZ		BUSHING: 2 X 1 1/4 IN. 600 (14959)	C	EA	1									120	8
N MFFZZ		PIPE, SEAMLESS: 1 1/4 IN. 516-45109A1-117 (80064) MANUFACTURE FROM:	C	EA	1									120	9
N PAFZZ		PIPE, SEAMLESS, 1 1/4 IN., SCHEDULE 80, 7 FT, 2 IN. REQUIRED MILT20157TYPEE (81349)		FT		*	*	*	*	*	*			120	
N XDFZZ		TEE 13811-1-4IN (14959)	C	EA	2									120	10
N MFFZZ		PIPE: 1 1/4 IN. 516-45109A1-28 (80064) MANUFACTURE FROM:	C	EA	1									120	11
N PAFZZ		PIPE, 1 1/4 IN., SCHEDULE 80, 2 FT, 8 IN. REQUIRED MILT20157TYPEE (81349)		FT		*	*	*	*	*	*			120	
N XDFZZ		UNION: 1 1/4 IN. 1383 (14959)	C	EA	2									120	12
N MFFZZ		PIPE: 1 1/4 IN. 516-45109A1-11 (80064) MANUFACTURE FROM:	C	EA	4									120	13
N PAFZZ		PIPE, 1 1/4 IN., SCHEDULE 80, 10 IN. REQUIRED FOR EA PIPE MILT20157TYPEE (81349)		FT		*	*	*	*	*	*			120	
N XDFZZ		ELBOW: 90 DEG 1380 (14959)	C	EA	11									120	14
N MFFZZ		PIPE, SEAMLESS: 1 1/4 IN., SCHEDULE 80 516-45109A1-81 (80064) MANUFACTURE FROM:	C	EA	1									120	15
N PAFZZ		PIPE, 1 1/4 IN., SCHEDULE 80, 6 IN. REQUIRED MILT20157TYPEE (81349)		FT		*	*	*	*	*	*			120	
N MFFZZ		PIPE, SEAMLESS: 1 1/4 IN., SCHEDULE 80 516-45109A1-80 (80064) MANUFACTURE FROM:	C	EA	1									120	16
N PAFZZ		PIPE, 1 1/4 IN., SCHEDULE 80, 4 IN. REQUIRED MILT20157TYPEE (81349)		FT		*	*	*	*	*	*			120	
N PAFZZ		REDUCER, SCREWED: LINE TO RAMP CONTROL VALVE, 1 1/4 X 1 1/2 IN. 1-1-4X1-1-2IN (14959)	C	EA	1	*	*	*	*	*	*	*	*	120	17
N MFFZZ		PIPE, SEAMLESS: 1 1/4 IN. 516-45109A1-118 (80064) MANUFACTURE FROM:	C	EA	1									120	18
N PAFZZ		PIPE, SEAMLESS, 1 1/4 IN., 6 FT REQUIRED MILT20157TYPEE (81349)		FT		*	*	*	*	*	*			120	
N XDFZZ		COUPLING: 1 1/4 IN. 1386 (14959)	C	EA	11									120	19

	(1) SMR CODE	(2) FEDERAL STOCK NUMBER	(3) DESCRIPTION REF NUMBER & MFR CODE	USABLE ON CODE	(4) UNIT OF MEAS	(5) QTY INC IN UNIT	(6) 30-DAY DS MAINT ALLOWANCE (a) 1-20	(b) 21-50	(c) 51-100	(7) 30-DAY GS MAINT ALLOWANCE (a) 1-20	(b) 21-50	(c) 51-100	(8) 1-YR ALW PER 100 EQUIP CNTGY	(9) DEPOT MAINT ALW PER 100 EQUIP	(10) ILLUSTRATION (a) FIG. NO.	(b) ITEM NO.
N	MFFZZ		PIPE, SEAMLESS: 1 1/4 IN. 516-4510941-119 (80064) MANUFACTURE FROM:	C	EA	1									120	20
N	PAFZZ		PIPE, SEAMLESS, 1 1/4 IN. , SCHEDULE 80, 6 FT, 3 IN. REQUIRED MILT20157TYPEE (81349)		FT		*	*	*	*	*	*			120	
N	XDFZZ		COUPLING, COMPRESSION: 1 1/4 IN. 210 (34749)	C	EA	12									120	21
N	MOOZZ		HOSE ASSEMBLY: PUMP 211R32PM32AS32-216 (03925) MANUFACTURE FROM:	C	EA	2									120	22
N	PAOZZ		HOSE, 2 IN., AS REQUIRED 211R32 (03925)		FT		*	*	*	*	*	*			120	
N	PAOZZ		FITTING, 1 REQUIRED PM32 (03925)		EA		*	*	*	*	*	*			120	
N	PAOZZ		FITTING, 1 REQUIRED AS32 (03925)		EA		*	*	*	*	*	*			120	
N	XDOZZ		ADAPTER 1013-32-32 (03925)	C	EA	2									120	23
N	MFFZZ		PIPE, SEAMLESS: 2 IN., SCHEDULE 40 516-4510941-57 (80064) MANUFACTURE FROM:	C	EA	2									120	24
N	PAFZZ		PIPE, 2 IN., SCHEDULE 40, 3 FT, 6 IN. REQUIRED FOR EA PIPE MILT20157TYPEE (81349)		FT		*	*	*	*	*	*			120	
N	MFFZZ		NIPPLE, PIPE 516-4510941-37 (80064) MANUFACTURE FROM:	C	EA	1									120	25
N	PAFZZ		PIPE, 2 IN., SCHEDULE 40, 8 IN. REQUIRED MILT20157TYPEE (81349)		FT		*	*	*	*	*	*			120	
N	MFFZZ		PIPE, SEAMLESS: 2 IN., SCHEDULE 40 516-4510941-55 (80064) MANUFACTURE FROM:	C	EA	1									120	26
N	PAFZZ		PIPE, 2 IN., SCHEDULE 40, 1 FT, 8 IN. REQUIRED MILT20157TYPEE (81349)		FT		*	*	*	*	*	*			120	
N	XDFZZ		ELBOW: 45 DEG 15021N45DEG (14959)	C	EA	1									120	27
N	MFFZZ		NIPPLE, PIPE 516-4510941-38 (80064) MANUFACTURE FROM:	C	EA	1									120	28
N	PAFZZ		PIPE, 2 IN., SCHEDULE 40, 4 IN. REQUIRED MILT20157TYPEE (81349)		FT		*	*	*	*	*	*			120	
N	MOOZZ		HOSE ASSEMBLY: CONTROL VALVE 272R20PMN20PMN20-36 (03925) MANUFACTURE FROM:	C	EA	1									120	29
N	PAOZZ		HOSE, 1 1/4 IN., AS REQUIRED 272R20 (03925)		FT		*	*	*	*	*	*			120	
N	XDOZZ		FITTING, 2 REQUIRED PMN20 (03925)		EA										120	
N	XDFZZ		CONNECTOR, MALE 2021-4-4S (01276)	C	EA	1									120	30
N	XDFZZ		BUSHING: 1 1/4 X 1 1/4 IN. 600 (14959)	C	EA	1									120	31
N	XDFZZ		TEE, SCREWED: 1 1/4 IN., SCHEDULE 80 3811-1-4IN (14959)	C	EA	1									120	32

(1) SMR CODE	(2) FEDERAL STOCK NUMBER	(3) DESCRIPTION — REF NUMBER & MFR CODE	USABLE ON CODE	(4) UNIT OF MEAS	(5) QTY INC IN UNIT	(6) 30-DAY DS MAINT ALLOWANCE (a) 1-20	(b) 21-50	(c) 51-100	(7) 30-DAY GS MAINT ALLOWANCE (a) 1-20	(b) 21-50	(c) 51-100	(8) 1-YR ALW PER 100 EQUIP CNTGY	(9) DEPOT MAINT ALW PER 100 EQUIP	(10) ILLUSTRATION (a) FIG. NO.	(b) ITEM NO.
N MFFZZ		PIPE, SEAMLESS: 1 1/4 IN., SCHEDULE 80 516-4510941-72 (80064) MANUFACTURE FROM:	C	EA	1									120	33
N PAFZZ		PIPE, 1 1/4 IN., SCHEDULE 80, 2 FT, 10 IN. REQUIRED MILT20157TYPEE (81349)		FT		•	•	•	•	•	•			120	
N MFFZZ		PIPE, SEAMLESS: 1 1/4 IN., SCHEDULE 80 516-4510941-71 (80064) MANUFACTURE FROM:	C	EA	1									120	34
N PAFZZ		PIPE, 1 1/4 IN., SCHEDULE 80, 2 FT, 1 IN. REQUIRED MILT20157TYPEE (81349)		FT		•	•	•	•	•	•			120	
N MOOZZ		HOSE ASSEMBLY: PUMP DISC 272R20PM20PM20-30 (03925) MANUFACTURE FROM:	C	EA	2									120	35
N PAOZZ		HOSE, FLEXIBLE, 1 1/4 IN., AS REQUIRED 272R20 (03925)		FT		•	•	•	•	•	•			120	
N PAOZZ		FITTING, 2 REQUIRED PM20 (03925)		EA		•	•	•	•	•	•			120	
N MFFZZ		PIPE, SCHEDULE 80, SEAMLESS: 1 1/4 IN. 516-4510941-1 (80064) MANUFACTURE FROM:	C	EA	1									120	36
N PAFZZ		PIPE, 1 1/4 IN., SCHEDULE 80, SEAMLESS, 6 FT, 4 IN. REQUIRED MILT20157TYPEE (81349)		EA		•	•	•	•	•	•			120	
N MFFZZ		PIPE, SEAMLESS 516-4510941-58 (80064) MANUFACTURE FROM:	C	EA	1									120	37
N PAFZZ		PIPE, 1 1/4 IN., SCHEDULE 80, 11 IN. REQUIRED MILT20157TYPEE (81349)		FT		•	•	•	•	•	•			120	
N MOOZZ		HOSE ASSEMBLY: CONTROL VALVE 272R20PM20PM20-36 (03925) MANUFACTURE FROM:	C	EA	2									121	1
N PCOZZ		HOSE, 1 1/4 IN., AS REQUIRED 272R20 (03925)		FT		•	•	•	•	•	•			121	
N PAOZZ		FITTING, 2 REQUIRED FOR EA HOSE PM20 (03925)		EA		•	•	•	•	•	•			121	
N XDFZZ		COUPLING: 1 1/4 IN. 386 (14959)	C	EA	5									121	2
N MFFZZ		PIPE, SEAMLESS: 1 1/4 IN., SCHEDULE 80 516-4510941-73 (80064) MANUFACTURE FROM:	C	EA	2									121	3
N PAFZZ		PIPE, 1 1/4 IN., SCHEDULE 80, 3 FT, 2 IN. REQUIRED FOR EA PIPE MILT20157TYPEE (81349)		FT		•	•	•	•	•	•			121	
N XDFZZ		ELBOW: 90 DEG 1380 (14959)	C	EA	8									121	4
N MFFZZ		PIPE, SEAMLESS: 1 1/4 IN., SCHEDULE 80 516-4510941-74 (80064) MANUFACTURE FROM:	C	EA	2									121	5
N PAFZZ		PIPE, 1 1/4 IN., SCHEDULE 80, 20 FT REQUIRED MILT20157TYPEE (81349)		FT		•	•	•	•	•	•			121	
N MFFZZ		PIPE, SEAMLESS: 1 1/4 IN., SCHEDULE 80 516-4510941-76 (80064) MANUFACTURE FROM:	C	EA	1									121	6
N PAFZZ		PIPE, 1 1/4 IN., SCHEDULE 80, 7 FT, 5 IN. REQUIRED MILT20157TYPEE (81349)		FT		•	•	•	•	•	•			121	

(1) SMR CODE	(2) FEDERAL STOCK NUMBER	(3) DESCRIPTION REF NUMBER & MFR CODE	USABLE ON CODE	(4) UNIT OF MEAS	(5) QTY INC IN UNIT	(6) 30-DAY DS MAINT ALLOWANCE (a) 1-20	(b) 21-50	(c) 51-100	(7) 30-DAY GS MAINT ALLOWANCE (a) 1-20	(b) 21-50	(c) 51-100	(8) 1-YR ALW PER 100 EQUIP CNTGY	(9) DEPOT MAINT ALW PER 100 EQUIP	(10) ILLUST-TRATION (a) FIG. NO.	(b) ITEM NO.
N MFFZZ		PIPE, SEAMLESS: 1 1/4 IN., SCHEDULE 80 516-4510941-78 (80064) MANUFACTURE FROM:	C	EA	2									121	7
N PAFZZ		PIPE, 1 1/4 IN., SCHEDULE 80, 2 FT, 2 IN. REQUIRED MIL T20157 TYPE E (81349)		EA		*	*	*	*	*	*			121	
N PAFZZ		COUPLING, COMPRESSION: 1 1/4 IN. 210 (34749)	C	EA	2	*	*	*	*	*	*	*	*	121	8
N MFFZZ		PIPE, SEAMLESS: 1 1/4 IN., SCHEDULE 80 516-4510941-75 (80064) MANUFACTURE FROM:	C	EA	1									121	9
N PAFZZ		PIPE, 1 1/4 IN., SCHEDULE 80, 15 FT REQUIRED MIL T20157 TYPE E (81349)		FT		*	*	*	*	*	*			121	
N MFFZZ		PIPE, SEAMLESS: 1 1/4 IN., SCHEDULE 80 516-4510941-77 (80064) MANUFACTURE FROM:	C	EA	1									121	10
N PAFZZ		PIPE, 1 1/4 IN., SCHEDULE 80, 7 FT, 4 1/2 IN. REQUIRED MIL T20157 TYPE E (81349)		FT		*	*	*	*	*	*			121	
N MFFZZ		PIPE, SEAMLESS: 1 1/4 IN., SCHEDULE 80 516-4510941-79 (80064) MANUFACTURE FROM:	C	EA	1									121	11
N PAFZZ		PIPE, 1 1/4 IN., SCHEDULE 80, 1 FT, 6 IN. REQUIRED MIL T20157 TYPE E (81349)		FT		*	*	*	*	*	*			121	
N PAFZZ		HOSE, 1 1/4 IN. ID, AS REQUIRED 272R20 (03925)		FT		*	*	*	*	*	*				
N PAFZZ		FITTING, 1 EA REQUIRED FHN20-59 (03925)		EA		*	*	*	*	*	*				
N PAFZZ		FITTING, 1 EA REQUIRED OR20-42 (03925)		EA		*	*	*	*	*	*				
N HOOZZ		HOSE ASSEMBLY: WINCH 272R20FHN20SAA5A25 (03925) MANUFACTURE FROM:	C	EA	1									122	1
N PCOZZ		HOSE, 1 1/4 IN., AS REQUIRED 272R20 (03925)		FT		*	*	*	*	*	*			122	
N PAOZZ		FITTING, HOSE, 1 REQUIRED FHN20 (03925)		EA		*	*	*	*	*	*			122	
N PAOZZ		FITTING, HOSE, 1 REQUIRED SAA5A (03925)		EA		*	*	*	*	*	*			122	
N XDFZZ		ELBOW, SCREWED: 1 1/4 IN. 5701-1-1-41N (63686)	C	EA	3									122	2
N MFFZZ		PIPE: 1 1/4 IN. 516-4510941-11 (80064) MANUFACTURE FROM:	C	EA	1									122	3
N PAFZZ		PIPE, 1 1/4 IN., SCHEDULE 80, 10 IN. REQUIRED MIL T20157 TYPE E (81349)		FT		*	*	*	*	*	*			122	
N PAFZZ		COUPLING, COMPRESSION: 1 1/4 IN. 210 (34749)	C	EA	7	*	*	*	*	*	*	*	*	122	4
N MFFZZ		PIPE, SEAMLESS: 1 1/4 IN. 516-4510941-125 (80064) MANUFACTURE FROM:	C	EA	2									122	5
N PAFZZ		PIPE, SEAMLESS, 1 1/4 IN., 10 IN. REQUIRED MIL T20157 TYPE E (81349)		FT		*	*	*	*	*	*			122	
N XDFZZ		ELBOW: 90 DEG 1380 (14959)	C	EA	6									122	6

(1) SMR CODE	(2) FEDERAL STOCK NUMBER	(3) DESCRIPTION — REF NUMBER & MFR CODE	USABLE ON CODE	(4) UNIT OF MEAS	(5) QTY INC IN UNIT	(6) 30-DAY DS MAINT ALLOWANCE (a) 1-20	(b) 21-50	(c) 51-100	(7) 30-DAY GS MAINT ALLOWANCE (a) 1-20	(b) 21-50	(c) 51-100	(8) 1-YR ALW PER 100 EQUIP CNTGY	(9) DEPOT MAINT ALW PER 100 EQUIP	(10) ILLUSTRATION (a) FIG. NO.	(b) ITEM NO.
N MFFZZ		PIPE: 1 1/4 IN., SCHEDULE 80 516-4510941-30 (80064) MANUFACTURE FROM:	C	EA	1									122	7
N PAFZZ		PIPE, 1 1/4 IN., SCHEDULE 80, 2 FT, 6 IN. REQUIRED MIL T20157TYPEE (81349)		FT		•	•	•	•	•	•			122	
N XDFZZ		UNION: FEMALE AND MALE 25NN1-1-4IN (14959)	C	EA	1									122	8
N XDFZZ		NIPPLE, PIPE, CLOSE: 1 1/4 IN., SCHEDULE 80 1-1-4INCLOSE (14959)	C	EA	1									122	9
N XDFZZ		UNION: 1 1/4 IN. 1383 (14959)	C	EA	1									122	10
N MFFZZ		PIPE: 1 1/4 IN. 516-4510941-28 (80064) MANUFACTURE FROM:	C	EA	1									122	11
N PAFZZ		PIPE, 1 1/4 IN., SCHEDULE 80, 2 FT, 8 IN. REQUIRED MIL T20157TYPEE (81349)		FT		•	•	•	•	•	•			122	
N MFFZZ		PIPE: 1 1/4 IN. 516-4510941-27 (80064) MANUFACTURE FROM:	C	EA	1									122	12
N PAFZZ		PIPE, 1 1/4 IN., SCHEDULE 80, 15 IN. REQUIRED MIL T20157TYPEE (81349)		FT		•	•	•	•	•	•			122	
N HOOZZ		HOSE ASSEMBLY 272R20P4N20SA20-20 (03925) MANUFACTURE FROM:	C	EA	1									122	13
N PCOZZ		HOSE, 1 1/4 IN., AS REQUIRED 272R20 (03925)		FT		•	•	•	•	•	•			122	
N PAOZZ		FITTING, HOSE, 1 REQUIRED P4N20 (03925)		EA		•	•	•	•	•	•			122	
N PAOZZ		FITTING, HOSE, 1 REQUIRED SA20 (03925)		EA		•	•	•	•	•	•			122	
N MFFZZ		PIPE, SEAMLESS : 1 1/4 IN. 516-4510941-125 (80064) MANUFACTURE FROM:	C	EA	1									122	14
N PAFZZ		PIPE, SEAMLESS, 1 1/4 IN., SCHEDULE 80, 10 IN. REQUIRED MIL T20157TYPEE (81349)		FT		•	•	•	•	•	•			122	
N MFFZZ		PIPE, SEAMLESS: 1 1/4 IN. MANUFACTURE FROM:	C	EA	1									122	15
N PAFZZ		PIPE, SEAMLESS, 1 1/4 IN., SCHEDULE 80, AS REQUIRED MIL T20157TYPEE (81349)		FT		•	•	•	•	•	•			122	
N MFFZZ		PIPE, SEAMLESS: 1 1/4 IN. 516-4510941-124 (80064) MANUFACTURE FROM:	C	EA	1									122	16
N PAFZZ		PIPE, SEAMLESS, 1 1/4 IN., SCHEDULE 80, 1 FT REQUIRED MIL T20157TYPEE (81349)		FT		•	•	•	•	•	•			122	
N MFFZZ		PIPE, SEAMLESS: 1 1/4 IN. 516-4510941-123 (80064) MANUFACTURE FROM:	C	EA	1									122	17
N PAFZZ		PIPE, SEAMLESS, 1 1/4 IN., SCHEDULE 80, 4 FT REQUIRED MIL T20157TYPEE (81349)		FT		•	•	•	•	•	•			122	
N XDFZZ		COUPLING: 1 1/4 IN. 1386 (14959)		EA	1									122	18

(1) SMR CODE	(2) FEDERAL STOCK NUMBER	(3) DESCRIPTION REF NUMBER & MFR CODE	USABLE ON CODE	(4) UNIT OF MEAS	(5) QTY INC IN UNIT	(6) 30-DAY DS MAINT ALLOWANCE (a) 1-20	(b) 21-50	(c) 51-100	(7) 30-DAY GS MAINT ALLOWANCE (a) 1-20	(b) 21-50	(c) 51-100	(8) 1-YR ALW PER 100 EQUIP CNTGY	(9) DEPOT MAINT ALW PER 100 EQUIP	(10) ILLUSTRATION (a) FIG. NO.	(b) ITEM NO.
N MFFZZ		PIPE, SEAMLESS 516-45109A1-122 (80064) MANUFACTURE FROM:	C	EA	1									122	19
N PAFZZ		PIPE, SEAMLESS, 1 1/4 IN., SCHEDULE 80, 10 FT, 7 IN. REQUIRED MILT20157TYPEE (81349)		FT		*	*	*	*	*	*			122	
N MFFZZ		PIPE, SEAMLESS 516-45109A1-121 (80064) MANUFACTURE FROM:	C	EA	1									122	20
N PAFZZ		PIPE, SEAMLESS, 1 1/4 IN., SCHEDULE 80, 20 FT REQUIRED MILT20157TYPEE (81349)		FT		*	*	*	*	*	*			122	
N MFFZZ		PIPE, SEAMLESS 516-45109A1-120 (80064) MANUFACTURE FROM:	C	EA	1									122	21
N PAFZZ		PIPE, SEAMLESS, 1 1/4 IN., SCHEDULE 80, 17 IN. REQUIRED MILT20157TYPEE (81349)		FT		*	*	*	*	*	*			122	
N MOOZZ		HOSE ASSEMBLY 272R20PMN20SA20-133-4 (03925) MANUFACTURE FROM:	C	EA	1									122	22
N PCOZZ		HOSE, 1 1/4 IN., AS REQUIRED 272R20 (03925)		FT		*	*	*	*	*	*			122	
N PAOZZ		FITTING, HOSE, 1 REQUIRED PMN20 (03925)		EA		*	*	*	*	*	*			122	
N PAOZZ		FITTING, HOSE, 1 REQUIRED SA20 (03925)		EA		*	*	*	*	*	*			122	
N MFFZZ		PIPE, SEAMLESS: 1 1/4 IN., SCHEDULE 80 516-45109A1-20 (80064) MANUFACTURE FROM:	C	EA	1									122	23
N PAFZZ		PIPE, 1 1/4 IN., SCHEDULE 80, SEAMLESS, 2 FT, 4 IN. REQUIRED MILT20157TYPEE (81349)		FT		*	*	*	*	*	*			122	
N MFFZZ		PIPE: 1 1/4 IN., SCHEDULE 80 516-45109A1-19 (80064) MANUFACTURE FROM:	C	EA	1									122	24
N PAFZZ		PIPE, 1 1/4 IN., SCHEDULE 80, 4 FT, 3 IN. REQUIRED MILT20157TYPEE (81349)		FT		*	*	*	*	*	*			122	
N MOOZZ		HOSE ASSEMBLY: HAND PUMP 242A6JS6PM6-28 (03925) MANUFACTURE FROM:	C	EA	1									123	1
PCOZZ		HOSE, FLEXIBLE: 3/8 IN., AS REQUIRED 242R6 (03925)		FT		*	*	*	*	*	*			123	
PAOZZ		FITTING, HOSE, 1 REQUIRED JS6 (03925)		EA		*	*	*	*	*	*			123	
PAOZZ		FITTING, HOSE, 1 REQUIRED PM6 (03925)		EA		*	*	*	*	*	*			123	
N PAOZZ	4820-248-3701	VALVE, BALL 1-244BSE (98991)	C	EA	1	*	*	*	*	*	*	*	*	123	2
N XDFZZ		NIPPLE: 1/2 X 2 IN. LG, SCHEDULE 80 1-21NX21NLG (14959)	C	EA	1									123	3
N XDFZZ		ELBOW, UNION, FEMALE: 1/2 IN. 7340-1-21N (63686)	C	EA	1									123	4
N XDOZZ		NIPPLE, HEXAGON: 3/8 X 1/2 IN. C3069X8X6 (79470)	C	EA	1									123	5
N XDFZZ		ELBOW, SWIVEL: 90 DEG, 1/2 IN. 1037-8-8 (03925)	C	EA	1									123	6

(1) SMR CODE	(2) FEDERAL STOCK NUMBER	(3) DESCRIPTION REF NUMBER & MFR CODE	USABLE ON CODE	(4) UNIT OF MEAS	(5) QTY INC IN UNIT	(6) 30-DAY DS MAINT ALLOWANCE (a) 1-20	(b) 21-50	(c) 51-100	(7) 30-DAY GS MAINT ALLOWANCE (a) 1-20	(b) 21-50	(c) 51-100	(8) 1-YR ALW PER 100 EQUIP CNTGY	(9) DEPOT MAINT ALW PER 100 EQUIP	(10) ILLUSTRATION (a) FIG. NO.	(b) ITEM NO.
N MOOZZ		HOSE ASSEMBLY: HAND PUMP 242R6JS6PM6-28 (03925) MANUFACTURE FROM:	C	EA	1									123	7
PCOZZ		HOSE, FLEXIBLE, 3/8 IN., AS REQUIRED 242R6 (03925)		FT		*	*	*	*	*	*			123	
PAOZZ		FITTING, HOSE, 1 REQUIRED JS6 (03925)		EA		*	*	*	*	*	*			123	
PAOZZ		FITTING, HOSE, 1 REQUIRED PM6 (03925)		EA		*	*	*	*	*	*			123	
N XDOZZ		ELBOW: HOSE TO VALVE 516-4510941-151 (80064)	C	EA	1									123	8
N XDOZZ		NIPPLE, HEXAGON: 3/8 X 1/2 IN. C3069X8X6 (79470)		EA	1									123	9
N MOOZZ		HOSE ASSEMBLY 225P6PM6PM6-24 (03925) MANUFACTURE FROM:	C	EA	1									123	10
PAOZZ		HOSE, FLEXIBLE, AS REQUIRED 225P6 (03925)		FT		*	*	*	*	*	*			123	
PAOZZ		FITTING, 2 REQUIRED PM6 (03925)		EA		*	*	*	*	*	*			123	
N MOOZZ		HOSE ASSEMBLY: RAMP WINCH 242R6JS6PM6-28 (03925) MANUFACTURE FROM:	C	EA	1									123	11
N PCOZZ		HOSE, FLEXIBLE, 3/8 IN., AS REQUIRED 242R6 (03925)		FT		*	*	*	*	*	*			123	
N PAOZZ		FITTING, HOSE, 1 REQUIRED JS6 (03925)		EA		*	*	*	*	*	*			123	
N PAOZZ		FITTING, HOSE, 1 REQUIRED PM6 (03925)		EA		*	*	*	*	*	*			123	
N XDFZZ		ELBOW: 90 DEG, 3/8 IN., SCHEDULE 80 380 (14959)	C	EA	3									123	12
N MFFZZ		PIPE, SEAMLESS: 3/8 IN., SCHEDULE 80 516-4510941-99 (80064) MANUFACTURE FROM:	C	EA	2									123	13
N PAFZZ	4710-846-9210	PIPE, 3/8 IN., SCHEDULE 80, SEAMLESS, 3 FT REQUIRED FOR EA PIPE MILT20157TYPEE (81349)		FT		*	*	*	*	*	*			123	
N XDFZZ		COUPLING COMPRESSION 210-3-8IN (34749)	C	EA	6									123	14
N XDFZZ		ELBOW: 90 DEG 1380 (14959)	C	EA	5									123	15
N MFFZZ		PIPE: 3/8 IN., SCHEDULE 80 516-4510941-97 (80064) MANUFACTURE FROM:	C	EA	2									123	16
N PAFZZ	4710-846-9210	PIPE, 3/8 IN., SCHEDULE 80, 2 FT REQUIRED MILT20157TYPEE (81349)		FT		*	*	*	*	*	*			123	
N MFFZZ		PIPE: 3/8 IN., SCHEDULE 80 516-4510941-90 (80064) MANUFACTURE FROM:	C	EA	2									123	17
N PAFZZ	4710-846-9210	PIPE, 3/8 IN., SCHEDULE 80, 5 FT REQUIRED FOR EA PIPE MILT20157TYPEE (81349)		FT		*	*	*	*	*	*			123	
N XDFZZ		ELBOW, SCREWED: 2 IN. 5740-1-2IN (63686)	C	EA	2									123	18

	(1) SMR CODE	(2) FEDERAL STOCK NUMBER	(3) DESCRIPTION REF NUMBER & MFR CODE	USABLE ON CODE	(4) UNIT OF MEAS	(5) QTY INC IN UNIT	(6) 30-DAY DS MAINT ALLOWANCE (a) 1-20	(b) 21-50	(c) 51-100	(7) 30-DAY GS MAINT ALLOWANCE (a) 1-20	(b) 21-50	(c) 51-100	(8) 1-YR ALW PER 100 EQUIP CNTGY	(9) DEPOT MAINT ALW PER 100 EQUIP	(10) ILLUSTRATION (a) FIG. NO.	(b) ITEM NO.
N	MFFZZ		PIPE, SEAMLESS 516-4510941-144 (80064) MANUFACTURE FROM:	C	EA	1									123	19
N	PAFZZ		PIPE, SEAMLESS, 1/2 IN., SCHEDULE 80, 1 FT, 9 IN. REQUIRED MILT20157TYPEE (81349)		FT		*	*	*	*	*	*			123	
N	MFFZZ		PIPE, SEAMLESS: 1/2 IN., SCHEDULE 80 516-4510941-145 (80064) MANUFACTURE FROM:	C	EA	1									123	20
N	PAFZZ		PIPE, SEAMLESS, 1/2 IN., SCHEDULE 80, 5 1/2 IN. REQUIRED MILT20157TYPEE (81349)		FT		*	*	*	*	*	*			123	
N	XDFZZ		REDUCER, SCREWED 1-2X3BIN (14959)	C	EA	1									123	21
N	MFFZZ		PIPE: 3/8 IN., SCHEDULE 80 516-4510941-95 (80064) MANUFACTURE FROM:	C	EA	1									123	22
N	PAFZZ	4710-846-9210	PIPE, 3/8 IN., SCHEDULE 80, 2 IN. REQUIRED MILT20157TYPEE (81349)		FT		*	*	*	*	*	*			123	
N	MOOZZ		HOSE ASSEMBLY: WINCH 225P6PM6PM6-24 (03925) MANUFACTURE FROM:	C	EA	1									123	23
N	PAOZZ		HOSE, FLEXIBLE, AS REQUIRED 225P6 (03925)		FT		*	*	*	*	*	*			123	
N	PAOZZ		FITTING, 2 REQUIRED PM6 (03925)		EA		*	*	*	*	*	*			123	
N	MOOZZ		HOSE ASSEMBLY 225R8PM8PM8-10 (03925) MANUFACTURE FROM:	C	EA	1									123	24
N	PAOZZ		HOSE, 1/2 IN. ID, AS REQUIRED 225R8 (03925)		FT		*	*	*	*	*	*			123	
N	PAOZZ		FITTING, 1 REQUIRED PM8 (03925)		EA		*	*	*	*	*	*			123	
N	XDFZZ		TEE, WELDED 1381-3-8IN (14959)	C	EA	1									123	25
N	MFFZZ		PIPE: 3/8 IN., SCHEDULE 80 516-4510941-89 (80064) MANUFACTURE FROM:	C	EA	1									123	26
N	PAFZZ		PIPE, 3/8 IN., SCHEDULE 80, AS REQUIRED MILT20157TYPEE (81349)		FT		*	*	*	*	*	*			123	
N	XDOZZ		TEE, PIPE: 1/2 IN. 516-4510941-17 (80064)	C	EA	1									123	27
N	MFFZZ		PIPE, SEAMLESS 516-4510941-131 (80064) MANUFACTURE FROM:	C	EA	3									123	28
N	PAFZZ		PIPE, SEAMLESS, 1/2 IN., SCHEDULE 80, AS REQUIRED MILT20157TYPEE (81349)		FT		*	*	*	*	*	*				
N	XDFZZ		COUPLING: 1/2 IN. 5711 (63686)	C	EA	4									123	29
N	MFFZZ		PIPE, SEAMLESS: 1/2 IN., SCHEDULE 80 516-4510941-143 (80064) MANUFACTURE FROM:	C	EA	3									123	30
N	PAFZZ		PIPE, SEAMLESS, 1/2 IN., SCHEDULE 80, AS REQUIRED MILT20157TYPEE (81349)		FT		*	*	*	*	*	*			123	
N	XDFZZ		ELBOW, SCREWED: 2 IN. 5740 (63686)	C	EA	1									123	31
N	MOOZZ		HOSE ASSEMBLY: WINCH 272R20PM20-590R20-42 (03925) MANUFACTURE FROM:	C	EA	1										
	PCOZZ		HOSE, 1 1/4 IN., AS REQUIRED 272R20 (03925)		FT		*	*	*	*	*	*				

(1) SMR CODE	(2) FEDERAL STOCK NUMBER	(3) DESCRIPTION REF NUMBER & MFR CODE	USABLE ON CODE	(4) UNIT OF MEAS	(5) QTY INC IN UNIT	(6) 30-DAY DS MAINT ALLOWANCE (a) 1-20	(b) 21-50	(c) 51-100	(7) 30-DAY GS MAINT ALLOWANCE (a) 1-20	(b) 21-50	(c) 51-100	(8) 1-YR ALW PER 100 EQUIP CNTGY	(9) DEPOT MAINT ALW PER 100 EQUIP	(10) ILLUSTRATION (a) FIG. NO.	(b) ITEM NO.
PAOZZ		FITTING, HOSE, 1 REQUIRED PM20 (03925)		EA											
PAOZZ		FITTING, HOSE, 1 REQUIRED SA20 (03950)		EA											
N XDOZZ		CONNECTOR, MALE: HOSE LATCH CYLINDER C5205X6X6 (88334)	C	EA	2										
		GROUP 70 - PUMP, HYDRAULIC, RAMP													
PAOHH	4320-115-8808	PUMP, HYDRAULIC: RAMP, RH 25V17A1C10-002 (62983) (COMPONENTS SAME AS PUMP, FSN 4320-115-8807)	A	EA	1	•	•	•	•	•	•	•	•	124	
PAOHH	4320-115-8807	PUMP, HYDRAULIC: RAMP, LH, CCW 25V17A1C10L002 (62983)	A	EA	1	•	•	•	•	•	•	•	•	124	
PAOZZ	6610-166-7043	SCREW, SELF-LOCK: PUMP MOUNT 199740 (62983)	A	EA	4	•	•	•	•	•	•	•	•	124	1
XDOZZ		BRACKET: PUMP MOUNT 199491 (62983)	A	EA	2									124	2
PAHZZ	5315-455-7118	KEY, WOODRUFF: SHAFT 9955 (62983)	A	EA	2				•	•	•	•	•	124	3
PAHZZ	5305-355-8355	SCREW, CAP, HEX-GON HEAD: INLET COVER MTG 96168 (62983)	A	EA	8				•	•	•	•	•	124	4
XDHZZ		COVER, HYDRAULIC PUMP 224309 (62983)	A	EA	2									124	5
PAHZZ	4320-454-7877	CARTRIDGE KIT: HYDRAULIC, PH CCW 923023L (62983) (COMPONENTS SAME AS KIT, FSN 4320-011-7536)	A	EA	1				•	•	•	•	•	124	
PAHZZ	4320-011-7536	CARTRIDGE KIT: HYDRAULIC PUMP WINCH 923023 (62983) (CONSISTS OF)	A	EA	2				•	•	•	•	•	124	
		2-PIN												124	6
		2-SCREW												124	7
		1-BEARING												124	8
		1-PLATE												124	9
		1-RING												124	10
		1-ROTOR												124	11
		1-VANE												124	12
		1-PLATE												124	13
		1-PACKING, PREFORMED												124	14
		1-RETAINER												124	15
		1-PACKING, PREFORMED												124	16
		1-PACKING, PREFORMED												124	17
		1-RETAINER												124	18
PAHZZ	5340-900-4378	RING, LOCK, SHAFT: BEARING RETAINER 191400 (62983)	A	EA	2				•	•	•	•	•	124	19
PAHZZ	5340-955-9438	RING, RETAINING: SNAP BEARING RETAINER 120128 (62983)	A	EA	2				•	•	•	•	•	124	20
PAHZZ	3130-849-8825	BEARING, BALL: PUMP SHAFT 1705 (62983)	A	EA	2				•	•	•	•	•	124	21
PAHZZ	2520-848-1831	SHAFT: HYDRAULIC PUMP, RAMP WINCH 238755 (62983)	A	EA	2				•	•	•	•	•	124	22
PAHZZ	5310-203-1111	WASHER, SEAL, RETAINER 190362 (62983)	A	EA	2				•	•	•	•	•	124	23

(1)	(2)	(3)		(4)	(5)	(6)			(7)			(8)	(9)	(10)	
SMR CODE	FEDERAL STOCK NUMBER	DESCRIPTION REF NUMBER & MFR CODE	USABLE ON CODE	UNIT OF MEAS	QTY INC IN UNIT	30-DAY DS MAINT ALLOWANCE (a) 1-20	(b) 21-50	(c) 51-100	30-DAY GS MAINT ALLOWANCE (a) 1-20	(b) 21-50	(c) 51-100	1-YR ALW PER 100 EQUIP CNTGY	DEPOT MAINT ALW PER 100 EQUIP	ILLUSTRATION (a) FIG. NO.	(b) ITEM NO.
KFHZZ		SEAL, SHAFT 191668 (62983) (PART OF KIT, FSN 3930-839-3256)	A	EA	1									124	24
KFHZZ		WIPER, SHAFT, SEAL 224476 (62983) (PART OF KIT, FSN 3930-839-3256)	A	EA	1									124	25
XAHZZ		BODY, PUMP HYDRAULIC 233709 (62983)		EA	2									124	26
PAOHH	4320-115-8806	PUMP, HYDRAULIC: RAMP 35V25A1C10L002 (62983) (COMPONENTS SAME AS PUMP, FSN 4320-115-8805)	BC	EA	1	•	•	•	•	•	•	•	•	125	
PAOHH	4320-115-8805	PUMP, HYDRAULIC: RAMP 35V25A1C10-002 (62983)	BC	EA	1	•	•	•	•	•	•	•	•	125	
C PAOZZ	5305-451-3487	SCREW, CAP, HEXAGON HEAD: BODY TO BRACKET 205533 (62983)	BC	EA	4	•	•	•	•	•	•	•	•	125	1
XDOZZ		BRACKET MOUNTING 205077 (62983)	BC	EA	2									125	2
PAHZZ	5315-732-0578	KEY: SHAFT MS20066-304 (96906)	BC	EA	2				•	•	•	•	•	125	3
PAHZZ	5306-458-2059	BOLT, MACHINE: INLET COVER MTG 11173 (62983)	BC	EA	4				•	•	•	•	•	125	4
C XDHZZ		COVER, HYDRAULIC PUMP 234248 (62983)	BC	EA	2									125	5
PAHZZ	4320-462-2153	CARTRIDGE KIT: HYDRAULIC PUMP 923259 (62983) (CONSISTS OF)	BC	EA	1				•	•	•	•	•	125	
		2-PIN												125	6
		2-SCREW												125	7
		1-BEARING												125	8
		1-WEAR PLATE												125	9
		1-RING												125	10
		1-ROTOR												125	11
		1-VANE												125	12
		1-PLATE												125	13
		1-RING												125	14
		1-RING												125	15
		1-PACKING, PREFORMED												125	16
		1-PACKING, PREFORMED												125	17
		1-RING												125	18
C PAHZZ	4320-869-6164	RING, RETAINING 193144 (62983)	BC	EA	2				•	•	•	•	•	125	19
C PAHZZ	4320-868-9569	RING, RETAINING: BEARING 119982 (62983)	BC	EA	2				•	•	•	•	•	125	20
R PAHZZ	4320-788-4509	BEARING, BALL: PUMP SHAFT 218585 (62983)	BC	EA	2				•	•	•	•	•	125	21
R PAHZZ	5305-958-0661	SHAFT 233624 (62983)	BC	EA	2				•	•	•	•	•	125	22
PAHZZ	5310-118-6314	WASHER: SHAFT 193220 (62983)	BC	EA	2				•	•	•	•	•	125	23

(1) SMR CODE	(2) FEDERAL STOCK NUMBER	(3) DESCRIPTION REF NUMBER & MFR CODE	USABLE ON CODE	(4) UNIT OF MEAS	(5) QTY INC IN UNIT	(6) 30-DAY DS MAINT ALLOWANCE (a) 1-20	(b) 21-50	(c) 51-100	(7) 30-DAY GS MAINT ALLOWANCE (a) 1-20	(b) 21-50	(c) 51-100	(8) 1-YR ALW PER 100 EQUIP CNTGY	(9) DEPOT MAINT ALW PER 100 EQUIP	(10) ILLUSTRATION (a) FIG. NO.	(b) ITEM NO.
KFHZZ		SEAL, PLAIN, ENCASED 193428 (62983) (PART OF KIT, FSN 4320-868-9568)	BC	EA	1									125	24
KFHZZ		WIPER 200465 (62983) (PART OF KIT, FSN 4320-868-9568)	BC	EA	1									125	25
XAHZZ		BODY 212647 (62983)	BC	EA	2									125	26
PCHZZ	3930-839-3256	SEAL KIT: RAMP PUMP 922850 (62983) (CONSISTS OF)	A	EA	1				•	•	•	•	•	124	
		1-PACKING, PREFORMED												124	14
		1-RETAINER												124	15
		1-PACKING, PREFORMED												124	16
		1-PACKING, PREFORMED												124	17
		1-RETAINER												124	18
		1-SEAL												124	24
		1-WIPER												124	25
PCHZZ	4320-868-9568	GASKET KIT: RAMP WINCH PUMP 922851 (62983) (CONSISTS OF)	BC	EA	1				•	•	•	•	•	125	
		1-RING												125	14
		1-RING												125	15
		1-PACKING, PREFORMED												125	16
		1-PACKING, PREFORMED												125	17
		1-RING												125	18
		1-SEAL												125	24
		1-WIPER												125	25
PAOZZ		PARAFLEX, COUPLING PX100HF (71956)	BC	EA	2	•	•	•	•	•	•	•	•		
PAOZZ	4320-462-2160	BUSHING, PUMP COUPLING 2517-1-1-4 (24617)	BC	EA	2	•	•	•	•	•	•	•	•		
PAOZZ	4320-462-2158	BUSHING, PUMP, COUPLING 2517-1-3-4 (71956)	BC	EA	2	•	•	•	•	•	•	•	•		
PAOZZ		COUPLING, HYDRAULIC PUMP 6020TYPEHF1-3-4X7-8 (71956)	A	EA	2	•	•	•	•	•	•	•	•		
N PAOZZ	5305-051-0827	SCREW, CAP, HEXAGON HEAD: RAMP HYDRAULIC PUMP MTG, 3/8-16 THD SIZE, 2 IN. LG MS90725-164 (96906)		EA	8	•	•	•	•	•	•	•	•		
N PAOZZ	4320-462-2158	BUSHING: WINCH HYDRAULIC PUMP DRIVE COUPLING 2517-13-4 (71956)	C	EA	2	•	•	•	•	•	•	•	•		
N PAOZZ	3010-417-0857	COUPLING PARAFLEX: WINCH HYDRAULIC PUMP DRIVE COUPLING PX110 (71956)	C	EA	2	•	•	•	•	•	•	•	•		
N PAOZZ	4320-462-2160	BUSHING: WINCH HYDRAULIC PUMP DRIVE COUPLING 2517-11-4 (24617)	C	EA	2	•	•	•	•	•	•	•	•		

	(1) SMR CODE	(2) FEDERAL STOCK NUMBER	(3) DESCRIPTION REF NUMBER & MFR CODE	USABLE ON CODE	(4) UNIT OF MEAS	(5) QTY INC IN UNIT	(6) 30-DAY DS MAINT ALLOWANCE (a) 1-20	(b) 21-50	(c) 51-100	(7) 30-DAY GS MAINT ALLOWANCE (a) 1-20	(b) 21-50	(c) 51-100	(8) 1-YR ALW PER 100 EQUIP CNTGY	(9) DEPOT MAINT ALW PER 100 EQUIP	(10) ILLUSTRATION (a) FIG. NO.	(b) ITEM NO.
N	MOOZZ		KEY, MACHINE: WINCH HYDRAULIC PUMP DRIVE COUPLING 145-4510923P16 (80064) MANUFACTURE FROM:	C	EA	2										
N	PAOZZ	9510-596-6289	ROD, SQUARE: 5/16 IN. STEEL, AS REQUIRED QQT580GRADECCLASSW1-10BAR (81348)		FT		•	•	•	•	•	•				
N	PAOZZ	5310-763-8920	NUT, PLAIN, HEXAGON: RAMP HYDRAULIC PUMP MTG, 5/8-11 THD SIZE MS51967-20 (96906)	C	EA	8	•	•	•	•	•	•	•	•		
N	PAOZZ	5310-820-6653	WASHER, LOCK: RAMP HYDRAULIC PUMP MTG, 5/8 IN. SCREW SIZE MS35338-50 (96906)	C	EA	8	•	•	•	•	•	•	•	•		
			GROUP 71 - WINCH, RAMP HOIST, MARCO													
	PBFHH	3950-121-5917	WINCH ASSEMBLY: RAMP HOIST W0951 (09608)	A	EA	1	•	•	•	•	•	•	•	•	126	
	PBHHH	3950-121-5920	BRAKE ASSEMBLY, RAMP WINCH M35818 (09608)	A	EA	1				•	•	•	•	•	126	
	XDHZZ		SCREW, CAP, HEXAGON HEAD: CAP MTG, 3/8-24 THD SIZE, 2 1/4 IN. LG	A	EA	6									126	1
	PAHZZ	5310-637-9541	WASHER, LOCK: CAP MTG, EXTERNAL TEETH, 3/8 IN. SCREW SIZE MS35338-46 (96906)	A	EA	6				•	•	•	•	•	126	2
	XDHZZ		CAP, BEARING, HOUSING B32082 (09608)	A	EA	1									126	3
P	PAHZZ	5365-061-8710	RING, RETAINING: BRAKE BEARING 5008-334 (79136)	A	EA	1				•	•	•	•	•	126	4
R	PAHZZ	3110-516-5491	BEARING, BALL: WINCH BRAKE 6209 (52676)	A	EA	1				•	•	•	•	•	126	5
	XDHZZ		KEY, MACHINE, SHAFT: 1/4 IN. SQ X 1 1/8 IN. LG	A	EA	1									126	6
	XDHZZ		SCREW, MACHINE: KEY, NO. 10-24 THD SIZE, 3/4 IN. LG	A	EA	3									126	7
	XDHZZ		KEY, MACHINE: HUB DISC A32090 (09608)	A	EA	3									126	8
	PAHZZ	5340-281-6623	RING, RETAINING: BRAKE HUB MS16624-125 (96906)	A	EA	1				•	•	•	•	•	126	9
	XDHZZ		HUB: WINCH BRAKE DISC A32089 (09608)	A	EA	1									126	10
	PAHZZ	3010-294-5173	DISC, CLUTCH DRIVEN A3378 (61208)	A	EA	5				•	•	•	•	•	126	11
	PAHZZ	3950-121-5918	PLATE, DRIVING: BRAKE DISC 35330 (61208)	A	EA	6				•	•	•	•	•	126	12
	XDHZZ		PIN, DOWEL: CAP TO HOUSING, ALLEN HD, 3/8 IN. DIA, 2 1/4 IN. LG	A	EA	2									126	13
	XDHZZ		RING, BRAKE: HOUSING SPACER A32083 (09608)	A	EA	1									126	14
	XDHZZ		SCREW, CAP, HEXAGON HEAD: END CAP MTG, 3/8-24 THD SIZE, 1 1/4 IN. LG	A	EA	6									126	15
	PAHZZ	5310-637-9541	WASHER, LOCK: END CAP MTG, STAINLESS STEEL, 3/8 IN. SCREW SIZE MS35338-46 (96906)	A	EA	6				•	•	•	•	•	126	16

(1) SMR CODE	(2) FEDERAL STOCK NUMBER	(3) DESCRIPTION REF NUMBER & MFR CODE	USABLE ON CODE	(4) UNIT OF MEAS	(5) QTY INC IN UNIT	(6) 30-DAY DS MAINT ALLOWANCE (a) 1-20	(b) 21-50	(c) 51-100	(7) 30-DAY GS MAINT ALLOWANCE (a) 1-20	(b) 21-50	(c) 51-100	(8) 1-YR ALW PER 100 EQUIP CNTGY	(9) DEPOT MAINT ALW PER 100 EQUIP	(10) ILLUSTRATION (a) FIG. NO.	(b) ITEM NO.
R XDHZZ		NUT, STOP, ELASTIC: PLUNGER RETAINER 49NTE144 (72962)	A	EA	1									126	17
XDHZZ		PLUNGER, BRAKE PISTON B32085 (09608)	A	EA	1									126	18
XDHZZ		CAP, END HOUSING: HYDRAULIC BRAKE B35829 (09608)	A	EA	1									126	19
R PAHZZ	5330-916-2409	RETAINER, PACKAGE: BACKUP PISTON 8-210N300-9 (83529)	A	EA	1				•	•	•	•	•	126	20
PCHZZ	5330-455-2683	PACKING, PREFORMED: PLUNGER ROD 2-214N103-7 (83259)	A	EA	1				•	•	•	•	•	126	21
PCHZZ	5330-455-2684	PACKING, PREFORMED: PISTON 2-342N103-7 (83259)	A	EA	1				•	•	•	•	•	126	22
PCHZZ	5330-455-2686	PACKING, PREFORMED: END CAP BUSHING 2-218N103-7 (83259)	A	EA	1				•	•	•	•	•	126	23
XDHZZ		ROD, BRAKE: PLUNGER AND PISTON A32944 (09608)	A	EA	1									126	24
PCHZZ	5330-455-2685	PACKING, PREFORMED: BRAKE ROD 2-210N103-7 (83259)	A	EA	1				•	•	•	•	•	126	25
PAHZZ	3120-454-0378	BUSHING, BRAKE: ROD PLUNGER A34804 (09608)	A	EA	1				•	•	•	•	•	126	26
PAHZZ	5360-235-5896	SPRING: 5/8 X 2 1/2 IN. LG, HD 5-8X2-1-2 (77535)	A	EA	12				•	•	•	•	•	126	27
XDHZZ		HOUSING, WINCH: BRAKE ASSEMBLY C35267 (09608)	A	EA	1									126	28
PAHZZ	5365-443-6134	RETAINER, RING: BACKUP, O RING 8-214N300-9 (83259)	A	EA	1				•	•	•	•	•	126	
PAHZZ	5330-462-4121	RETAINER, RING: BACKUP, O RING 8-342N300-9 (83259)	A	EA	1				•	•	•	•	•	126	
R PCHZZ	5330-165-5432	PACKING, PREFORMED: RING, END HOUSING 2-242N103-7 (83259)	A	EA	1				•	•	•	•	•	126	
XAHZZ		WINCH DRUM, RAMP HOIST C35853 (09608)	A	EA	1									127	
PBHHH	3950-121-5925	GEAR, REDUCER: RAMP HOIST W/MOTOR M35816 (09608)	A	EA	1				•	•	•	•	•	127	
XDOZZ		PLUG, PIPE: HOUSING, 1/2-14 THD SIZE	A	EA	1									127	1
XDOZZ		PLUG, PIPE: HOUSING DRAIN, 3/4-14 THD SIZE	A	EA	1									127	2
XDOZZ		PLUG, PIPE: HOUSING, 1 1/4 THD SIZE	A	EA	1									127	3
PAHZZ	5305-269-3209	SCREW, CAP, HEXAGON HEAD: PLATE COVER MTG, 3/8-16 THD SIZE, 3/4 IN. LG MS90725-58 (96906)	A	EA	8				•	•	•	•	•	127	4
XDHZZ		PLATE, COVER: GEAR HOUSING, TOP A32028 (09608)	A	EA	1									127	5
PCHZZ	5330-443-6114	GASKET: GEAR HOUSING, TOP PLATE A32029 (09608)	A	EA	1				•	•	•	•	•	127	6
PAHZZ	3950-122-9705	PINION, GEAR DRIVE: HYDRAULIC MOTOR B35813 (09608)	A	EA	1				•	•	•	•	•	127	7

(1) SMR CODE	(2) FEDERAL STOCK NUMBER	(3) DESCRIPTION REF NUMBER & MFR CODE	USABLE ON CODE	(4) UNIT OF MEAS	(5) QTY INC IN UNIT	(6) 30-DAY DS MAINT ALLOWANCE (a) 1-20	(b) 21-50	(c) 51-100	(7) 30-DAY GS MAINT ALLOWANCE (a) 1-20	(b) 21-50	(c) 51-100	(8) 1-YR ALW PER 100 EQUIP CNTGY	(9) DEPOT MAINT ALW PER 100 EQUIP	(10) ILLUSTRATION (a) FIG. NO.	(b) ITEM NO.
XDHZZ		KEY, MACHINE: HYDRAULIC MOTOR PINION GEAR, 1/4 IN. SQ, 15/32 IN. LG	A	EA	1									127	8
PCHZZ	5330-443-6127	GASKET: ACCESS, PLATE A32084 (09608)	A	EA	1				•	•	•	•	•	127	9
PAHZZ	5305-269-3211	SCREW, CAP, HEXAGON HEAD: SHAFT RETAINER MTG, 3/8-16 THD SIZE, 1 IN. LG MS90725-60 (96906)	A	EA	12				•	•	•	•	•	127	10
PAHZZ	5310-637-9541	WASHER, LOCK: SHAFT RETAINER MTG, 3/8 IN. SCREW SIZE MS35338-46 (96906)	A	EA	12				•	•	•	•	•	127	11
XDHZZ		RETAINER, SHAFT: CAP DRIVE A32023 (09608)	A	EA	1									127	12
PCHZZ	5330-443-6128	GASKET: SHAFT END CAPS A32031 (09608)	A	EA	2				•	•	•	•	•	127	13
XDHZZ		RETAINER, SHAFT: CAP, DRIVE A32025 (09608)	A	EA	1									127	14
PAHZZ	3950-119-9845	SHAFT, CLUSTER: GEAR IDLER A32020 (09608)	A	EA	1				•	•	•	•	•	127	15
PAHZZ	3950-121-5926	GEAR, CLUSTER: DRIVING C35796 (09608)	A	EA	1				•	•	•	•	•	127	16
R PAHZZ	5365-282-5315	RING, RETAINING: DRIVE, GEAR SHAFT BEARING 5000-175 (79136)	A	EA	2				•	•	•	•	•	127	17
PAHZZ	2805-869-3457	BEARING, ROLLER: DRIVE GEAR MR20 (92563)	A	EA	2				•	•	•	•	•	127	18
XDHZZ		RETAINER, SHAFT: IDLER GEAR A32024 (09608)	A	EA	1									127	19
PCHZZ	5330-443-6126	GASKET: IDLER, SHAFT, CAP A32030 (09608)	A	EA	1				•	•	•	•	•	127	20
XDHZZ		CAP, IDLER: GEAR SHAFT A32022 (90608)	A	EA	1									127	21
PCHZZ	5330-455-2694	PACKING, PREFORMED: RING, CAP 2-126N103-7 (83259)	A	EA	1				•	•	•	•	•	127	22
PAHZZ	3950-119-9844	SHAFT, IDLER, GEAR A32021 (09608)	A	EA	1				•	•	•	•	•	127	23
PAHZZ	3950-119-9846	GEAR, CLUSTER: GEAR, RED WINCH C32018 (09608)	A	EA	1				•	•	•	•	•	127	24
PAHZZ	5340-805-1398	RING, RETAINING: GEAR CLUSTER BEARING 5000-231 (79136)	A	EA	2				•	•	•	•	•	127	25
PAHZZ	3110-227-3252	BEARING, ROLLER: CLUSTER GEAR MR28 (92563)	A	EA	2				•	•	•	•	•	127	26
PAHZZ	5305-044-4153	SCREW, CAP, HEXAGON HEAD: FLANGE MTG, 1/2-13 THD SIZE, 1 IN. LG MS90725-109 (96906)	A	EA	8				•	•	•	•	•	127	27
XDHZZ		WASHER, LOCK: FLANGE AND MOTOR MTG	A	EA	12									127	28
XDHZZ		FLANGE, CASE, GEAR: RED WINCH D32027 (09608)	A	EA	1									127	29
PCHZZ	5330-443-6130	GASKET: GEAR HOUSING A30677 (09608)	A	EA	1				•	•	•	•	•	127	30
PAHZZ	3950-119-9843	SPACER, GEAR: REDUCER WINCH A32026 (09608)	A	EA	1				•	•	•	•	•	127	31
PCHZZ	5330-453-6561	SEAL, OIL: GEAR, DRUM SHAFT CR39927 (09608)	A	EA	1				•	•	•	•	•	127	32

(1) SMR CODE	(2) FEDERAL STOCK NUMBER	(3) DESCRIPTION REF NUMBER & MFR CODE	USABLE ON CODE	(4) UNIT OF MEAS	(5) QTY INC IN UNIT	(6) 30-DAY DS MAINT ALLOWANCE (a) 1-20	(b) 21-50	(c) 51-100	(7) 30-DAY GS MAINT ALLOWANCE (a) 1-20	(b) 21-50	(c) 51-100	(8) 1-YR ALW PER 100 EQUIP CNTGY	(9) DEPOT MAINT ALW PER 100 EQUIP	(10) ILLUSTRATION (a) FIG. NO.	(b) ITEM NO.
PCHZZ	5330-453-6570	SEAL, OIL: GEAR, DRUM SHAFT CR39961 (09608)	A	EA	1				•	•	•	•	•	127	33
PAHZZ	3110-144-8937	BEARING, BALL: DRUM SHAFT 6318 (52676)	A	EA	1				•	•	•	•	•	127	34
PAHZZ	3950-122-3960	SHAFT, DRUM, GEAR C32017 (09608)	A	EA	1				•	•	•	•	•	127	35
R PAHZZ	3950-122-3961	GEAR, SPUR: GEAR, REDUCER WINCH C32015 (09608)	A	EA	1				•	•	•	•	•	127	36
R XDHZZ		RING, RETAINING: GEAR, RED WINCH MS16624-400 (96906)	A	EA	2									127	37
R PAHZZ	3110-554-3264	BEARING, BALL: SPUR, GEAR SHAFT 6216 (52676)	A	EA	1				•	•	•	•	•	127	38
XDHZZ		HOUSING, GEAR: REDUCER WINCH D35828 (09608)	A	EA	1									127	39
PAHZZ	5305-782-9495	SCREW, CAP, HEXAGON HEAD: MOTOR MTG, 1/2-13 THD SIZE, 1 1/4 IN. LG MS90725-111 (96906)	A	EA	4				•	•	•	•	•	127	40
PCHZZ	5330-443-6112	GASKET: HYDRAULIC MOTOR MTG A34520 (09608)	A	EA	1				•	•	•	•	•	127	41
XDHZZ		BASE, WINCH RAMP D30694 (09608)	A	EA	1									128	1
XDHZZ		DRUM, WINCH RAMP M35819 (09608)	A	EA	1									128	2
R XDHZZ		SUPPORT, DRUM WINCH D30628 (09608)	A	EA	1									128	3
PAHZZ	3950-119-9842	BUSHING, WINCH: DRUM SHAFT A32044 (09608)	A	EA	1				•	•	•	•	•	128	4
PAHZZ	5315-455-2765	PIN, PIVOT: WINCH BRAKE, CONTROL ROD A35839 (09608)	A	EA	1				•	•	•	•	•	128	5
XDHZZ		HANDLE, WINCH: BRAKE CONTROL ROD B35840 (09608)	A	EA	1									128	6
PAHZZ	5315-234-1623	PIN, COTTER: HANDLE MTG PIN, 3/32 IN. DIA, 3/4 IN. LG MS24665-319 (96906)	A	EA	2				•	•	•	•	•	128	7
XDHZZ		GRIP, HANDLE: WINCH BRAKE, CONTROL B2B17-5 (12505)	A	EA	1									128	8
PCHZZ	5330-453-6564	SEAL, OIL: WINCH SHAFT BEARING CR57544M1 (09608)	A	EA	1				•	•	•	•	•	128	9
PAHZZ	3110-155-6430	BEARING, BALL: DRUM SHAFT 216W (21335)	A	EA	1				•	•	•	•	•	128	10
XDOZZ		FITTING, LUBRICATION: BEARING, 1/8-27 THD SIZE 1610 (70278)	A	EA	1									128	11
XDFZZ		NUT: WINCH ASSEMBLY MTG, STAINLESS STEEL, 3/4-10 THD SIZE	A	EA	4									128	12
PAFZZ	5310-584-7888	WASHER, LOCK: WINCH ASSEMBLY MTG, 3/4 IN. SCREW SIZE MS35338-51 (96906)	A	EA	8	•	•	•	•	•	•	•	•	128	13
XDFZZ		SCREW, CAP, HEXAGON HEAD: WINCH ASSEMBLY MTG, 3/4-10 THD SIZE, 2 1/8 IN. LG	A	EA	4									128	14
XDFZZ		PIN, DOWEL: WINCH ASSEMBLY MTG, TAPER, STAINLESS STEEL, 3/4 IN. DIA, 2 IN. LG	A	EA	4									128	15

(1) SMR CODE	(2) FEDERAL STOCK NUMBER	(3) DESCRIPTION REF NUMBER & MFR CODE	USABLE ON CODE	(4) UNIT OF MEAS	(5) QTY INC IN UNIT	(6) 30-DAY DS MAINT ALLOWANCE (a) 1-20	(b) 21-50	(c) 51-100	(7) 30-DAY GS MAINT ALLOWANCE (a) 1-20	(b) 21-50	(c) 51-100	(8) 1-YR ALW PER 100 EQUIP CNTGY	(9) DEPOT MAINT ALW PER 100 EQUIP	(10) ILLUSTRATION (a) FIG. NO.	(b) ITEM NO.
PAHHH	4820-454-7871	VALVE, BRAKE: COMBINATION HYDRAULIC WINCH 18K2 (07988)	A	EA	1				*	*	*	*	*	129	
XDHZZ		PLUG, BRAKE VALVE 708 (07988)	A	EA	1									129	1
PCHZZ	5330-443-6124	PACKING, PREFORMED: BRAKE VALVE 1-013 (07988)	A	EA	1				*	*	*	*	*	129	2
PAHZZ	5360-443-6119	SPRING, BRAKE VALVE: SPOOL, LARGE 822 (07988)	A	EA	1				*	*	*	*	*	129	3
PAHZZ	5310-455-2801	WASHER, BRAKE VALVE: SPRING, SEAT 710 (07988)	A	EA	1				*	*	*	*	*	129	4
PAHZZ	4820-454-7874	SPOOL, BRAKE: VALVE CONTROL 711-1225 (07988)	A	EA	1				*	*	*	*	*	129	5
XDHZZ		BALL, STEEL: BRAKE VALVE, 5/32 IN. DIA	A	EA	3									129	6
PAHZZ	5360-443-6118	SPRING, SPOOL, SMALL 709 (07988)	A	EA	1				*	*	*	*	*	129	7
XAHZZ		BODY, COMBINATION: VALVE BRAKE 712 (07988)	A	EA	1									129	8
PAHHH	4320-115-8809	MOTOR, HYDRAULIC: RAMP WINCH MID117-2IN (16954)	A	EA	1				*	*	*	*	*	130	
XDHZZ		SCREW, CAP SOCKET HEAD: END CAP, 5/8-11 THD SIZE, 2 IN. LG 358-24240 (16954)	A	EA	4									130	1
XDHZZ		END, CAP: HYDRAULIC MOTOR 034-24179 (16954)	A	EA	1									130	2
PCHZZ	5330-118-9147	PACKING, PREFORMED: END CAP 671-00248 (16954)	A	EA	1				*	*	*	*	*	130	3
PAHZZ	3110-906-1707	BEARING, NEEDLE: SHAFT END BH1312 (60380)	A	EA	1				*	*	*	*	*	130	4
XDHZZ		PIN, DOWEL: END CAP, 1/4 IN. DIA, 3/4 IN. LG 324-21612 (16954)	A	EA	1									130	5
PAHZZ	4320-454-7856	CAM, RING ASSEMBLY: HYDRAULIC MOTOR S14-08452 (91940)	A	EA	1				*	*	*	*	*	130	
XAHZZ		CAM, RING: HYDRAULIC MOTOR 034-21849 (16954)	A	EA	1									130	6
PAHHH	4320-826-9807	ROTOR: HYDRAULIC MOTOR 034-21383 (16954)	A	EA	1				*	*	*	*	*	130	7
PAHZZ	4320-913-1012	VANE: HYDRAULIC MOTOR 034-24478 (16954)	A	EA	10				*	*	*	*	*	130	8
PAHZZ	4320-906-0150	SPRING, ROTOR VANE: HYDRAULIC MOTOR 034-21396 (16954)	A	EA	30				*	*	*	*	*	130	9
PAHZZ	5315-455-9992	PIN, ROLL: ROTOR VANE, 1/8 IN. DIA, 1 1/6 IN. LG 325-08110 (91940)	A	EA	30				*	*	*	*	*	130	10
XDHZZ		PLATE, FRONT PORT: HYDRAULIC MOTOR 034-24574 (16954)	A	EA	1									130	11
PAHZZ	2590-065-9639	SETSCREW: SHUTTLE VALVE SPOOL, 5/16-18 THD SIZE, 5/16 IN. LG, OVAL POINT 311-45001 (16954)	A	EA	2				*	*	*	*	*	130	12

(1)	(2)	(3)		(4)	(5)	(6) 30-DAY DS MAINT ALLOWANCE			(7) 30-DAY GS MAINT ALLOWANCE			(8)	(9)	(10) ILLUSTRATION	
						(a)	(b)	(c)	(a)	(b)	(c)			(a)	(b)
SMR CODE	FEDERAL STOCK NUMBER	DESCRIPTION REF NUMBER & MFR CODE	USABLE ON CODE	UNIT OF MEAS	QTY INC IN UNIT	1-20	21-50	51-100	1-20	21-50	51-100	1-YR ALW PER 100 EQUIP CNTGY	DEPOT MAINT ALW PER 100 EQUIP	FIG. NO.	ITEM NO.
XDHZZ		SPOOL, SHUTTLE VALVE 034-24184 (16954)	A	EA	1									130	13
PCHZZ	5330-454-0493	PACKING, PREFORMED: PLATE SEAL 671-00146 (16954)	A	EA	1				•	•	•	•	•	130	14
PCHZZ	5330-973-4314	PACKING, PREFORMED: PLATE SEAL 671-00246 (16954)	A	EA	1				•	•	•	•	•	130	15
XDHZZ		PIN, DOWEL: FRONT PORT PLATE, 1/4 IN. DIA, 1 1/4 IN. LG 324-21620 (16954)	A	EA	1									130	16
PAHZZ	2590-056-2182	WASHER, SPRING: NO. 72 350-10000 (16954)	A	EA	1				•	•	•	•	•	130	17
R PAHZZ	5365-803-9975	RING, RETAINING: SNAP SHAFT SEAL MS16624-112 (96906)	A	EA	1				•	•	•	•	•	130	18
PCHZZ	4320-932-3436	SEAL ASSEMBLY, SHAFT 623-11278 (16954)	A	EA	1				•	•	•	•	•	130	19
R PAHZZ	5365-826-7908	RING, RETAINING: SNAP BEARING MS16627-283 (96906)	A	EA	1				•	•	•	•	•	130	20
R PAHZZ	5365-803-9978	RING, RETAINING: SNAP SHAFT BEARING 356-31137 (16954)	A	EA	1				•	•	•	•	•	130	21
XDHZZ		KEY, SHAFT: 1/4 IN. SQ, 1 7/16 IN. LG 034-24311 (16954)	A	EA	1									130	22
PAHZZ	4320-454-7861	SHAFT, HYDRAULIC MOTOR: KEYED 034-24326 (16954)	A	EA	1				•	•	•	•	•	130	23
PAHZZ	3110-114-5987	BEARING, BALL: SHAFT, HYDRAULIC 99507 (43334)	A	EA	1				•	•	•	•	•	130	24
XAHZZ		HOUSING, HYDRAULIC MOTOR 034-24313 (16954)	A	EA	1									130	25
PAHZZ		VALVE, BALL: 1/2 IN. WINCH, HYDRAULIC MOTOR 1-2-411YB (98991)	A	EA	1				•	•	•	•	•	130	
		GROUP 72 - WINCH RAMP HOIST, GEARMATIC													
PBFHH	3950-119-0454	WINCH, RAMP HOIST 229CL10 (36581)	BC	EA	1	•	•	•	•	•	•	•	•	131	
PAHZZ	3110-400-3014	BEARING, BALL: DRUM SHAFT H117 (36581)	BC	EA	1				•	•	•	•	•	131	1
PCHZZ	5330-400-5353	PACKING, PREFORMED: SHAFT BEARING G252 (36581)	BC	EA	1				•	•	•	•	•	131	2
R PAHZZ	2590-227-8343	RING SEAL, SMALL: SHAFT BEARING A22008 (36581)	BC	EA	1				•	•	•	•	•	131	3
PAHZZ	5330-368-6247	SEAL, PLAIN, ENCASED: DRUM SHAFT U171 (36581)	BC	EA	1				•	•	•	•	•	131	4
PAHZZ	3120-456-6925	BEARING, SLEEVE, DRUM H601 (36581)	BC	EA	1				•	•	•	•	•	131	5
PAHZZ	5305-456-7065	SCREW, CAP, DOWEL: WINCH BASE A11041 (36581)	BC	EA	14				•	•	•	•	•	131	6
PAHZZ	5310-481-6481	WASHER, LOCK: WINCH BASE W14 (36581)	BC	EA	14				•	•	•	•	•	131	7
PAHZZ	5310-458-2334	NUT, PLAIN, HEXAGON: WINCH BASE N18 (36581)	BC	EA	14				•	•	•	•	•	131	8

(1) SMR CODE	(2) FEDERAL STOCK NUMBER	(3) DESCRIPTION REF NUMBER & MFR CODE	USABLE ON CODE	(4) UNIT OF MEAS	(5) QTY INC IN UNIT	(6) 30-DAY DS MAINT ALLOWANCE (a) 1-20	(b) 21-50	(c) 51-100	(7) 30-DAY GS MAINT ALLOWANCE (a) 1-20	(b) 21-50	(c) 51-100	(8) 1-YR ALW PER 100 EQUIP CNTGT	(9) DEPOT MAINT ALW PER 100 EQUIP	(10) ILLUSTRATION (a) FIG. NO.	(b) ITEM NO.
		HONDU, CABLE A22014 (36581)	BC	EA	1									131	9
	PAHZZ 5365-458-2315	RING, RETAINING: TAPER SEAL R21 (36581)	BC	EA	1				•	•	•	•	•	131	10
	PCHZZ 5330-462-4199	PACKING, PREFORMED: TAPER SEAL G331 (36581)	BC	EA	1				•	•	•	•	•	131	11
	PAHZZ 5365-461-5846	RING, SEALING, TAPERED: DRUM SHAFT A22000 (36581)	BC	EA	1				•	•	•	•	•	131	12
	PAHZZ 3950-121-0132	SHAFT, SUN GEAR B22004X (36581)	BC	EA	1				•	•	•	•	•	131	13
	PCHZZ 5330-368-6212	SEAL, PLAIN, ENCASED: DRUM U175 (36581)	BC	EA	1				•	•	•	•	•	131	14
	PAHZZ 2590-227-8342	RING, SEAL, LARGE: DRUM A22002 (36581)	BC	EA	1				•	•	•	•	•	131	15
	PCHZZ 5330-368-6214	PACKING, PREFORMED: DRUM G262 (36581)	BC	EA	1				•	•	•	•	•	131	16
	PAHZZ 5365-458-2316	RING, RETAINING SNAP: DRUM SEAL R120 (36581)	BC	EA	1				•	•	•	•	•	131	17
	PAHZZ 3110-368-6243	BEARING, BALL: DRUM H130 (36581)	BC	EA	1				•	•	•	•	•	131	18
	XDHZZ	BASE, WINCH D22009X (36581)	BC	EA	1									131	19
	XDHZZ	DRUM, WINCH C22000XC (36581	BC	EA	1									131	20
	PBHHH 3950-121-5927	MOTOR ASSEMBLY, WINCH A22BC (36581)	BC	EA	1				•	•	•	•	•	132	
C	PAHZZ 5305-045-1988	SCREW, CAP, HEXAGON HEAD: SPLIT FLANGE MTG MS90725-87 (96906)	BC	EA	6				•	•	•	•	•	132	1
C	PAHZZ 5310-209-0965	WASHER, LOCK: SPLIT FLANGE MTG MS35338-47 (96906)	BC	EA	6				•	•	•	•	•	132	2
	PAHZZ 3950-832-0161	SPLIT FLANGE SET B22015A (36581)	BC	EA	1				•	•	•	•	•	132	3
	PAOZZ 4730-879-8370	PLUG, PIPE: PORT END COVER F56 (36581)	BC	EA	2	•	•	•	•	•	•	•	•	132	4
	PAHZZ 5305-004-1575	SCREW: PORT END COVER MTG 3846 (36581)	BC	EA	1				•	•	•	•	•	132	5
	PAHZZ 5305-003-9471	SCREW: PORT END COVER MTG 3845 (36581)	BC	EA	5				•	•	•	•	•	132	6
	XDHZZ	COVER: END PORT D22016 (36581)	BC	EA	1									132	7
	PAHZZ 5330-457-6932	WASHER, BACKING: PACKING Z220 (36581)	BC	EA	2				•	•	•	•	•	132	8
	PCHZZ 5330-457-6915	PACKING, PREFORMED G220 (36581)	BC	EA	2				•	•	•	•	•	132	9
	PCHZZ 5330-457-6912	SEAL, PLAIN, ENCASED: PORT END COVER A22069 (36581)	BC	EA	2				•	•	•	•	•	132	10
	PAHZZ 5310-458-2121	WASHER, BACKING: O RING U211 (36581)	BC	EA	4				•	•	•	•	•	132	11
	PCHZZ 5330-918-7248	PACKING, PREFORMED U212 (36581)	BC	EA	2				•	•	•	•	•	132	12
	PAHZZ 3110-458-2038	BEARING, NEEDLE: GEAR AND SHAFT HA86 (36581)	BC	EA	6				•	•	•	•	•	132	13

(1) SMR CODE	(2) FEDERAL STOCK NUMBER	(3) DESCRIPTION REF NUMBER & MFR CODE	USABLE ON CODE	(4) UNIT OF MEAS	(5) QTY INC IN UNIT	(6) 30-DAY DS MAINT ALLOWANCE (a) 1-20	(b) 21-50	(c) 51-100	(7) 30-DAY GS MAINT ALLOWANCE (a) 1-20	(b) 21-50	(c) 51-100	(8) 1-YR ALW PER 100 EQUIP CNTGY	(9) DEPOT MAINT ALW PER 100 EQUIP	(10) ILLUSTRATION (a) FIG. NO.	(b) ITEM NO.
PCHZZ	5330-458-2057	SEAL, POCKET, LARGE U209 (36581)	BC	EA	8				•	•	•	•	•	132	14
PCHZZ	5330-458-2055	SEAL, POCKET, MEDIUM U208 (36581)	BC	EA	4				•	•	•	•	•	132	15
PCHZZ	5330-458-2056	SEAL, POCKET, SMALL U205 (36581)	BC	EA	8				•	•	•	•	•	132	16
PAHZZ	4320-462-2151	PLATE, THRUST C22043 (36581)	BC	EA	2				•	•	•	•	•	132	17
PAHZZ	4320-462-2147	SHAFT, MOTOR B22040 (36581)	BC	EA	1				•	•	•	•	•	132	18
PAHZZ	5315-458-2134	KEY, MACHINE: SHAFT K130 (36581)	BC	EA	1				•	•	•	•	•	132	19
PAHZZ	3020-462-2148	GEAR SET B22041 (36581)	BC	EA	1				•	•	•	•	•	132	20
PCHZZ	5330-458-2084	PACKING, PREFORMED: O RING G258 (36581)	BC	EA	2				•	•	•	•	•	132	21
XDHZZ		HOUSING, GEAR C22044 (36581)	BC	EA	1									132	22
PAHZZ	5365-458-2151	SPACER, BEARING A22070 (36581)	BC	EA	1				•	•	•	•	•	132	23
PAHZZ	5315-458-2132	PIN, BRAKE PISTON P235 (36581)	BC	EA	1				•	•	•	•	•	132	24
PAHZZ	2530-462-2149	PISTON, BRAKE C22045H (36581)	BC	EA	1				•	•	•	•	•	132	25
C PCHZZ	5330-458-2129	GASKET: SHAFT END COVER Z267 (36581)	BC	EA	1				•	•	•	•	•	132	26
PCHZZ	5330-913-3482	PACKING, PREFORMED: SHAFT END COVER G267 (36581)	BC	EA	1				•	•	•	•	•	132	27
XDHZZ		COVER, SHAFT END C22053C (36581)	BC	EA	1									132	28
PCHZZ	5330-913-3481	PACKING, PREFORMED: SHAFT END COVER G270 (36581)	BC	EA	1				•	•	•	•	•	132	29
C PCHZZ	5330-458-2130	GASKET Z270 (36581)	BC	EA	1				•	•	•	•	•	132	30
PAHHH	3950-121-0133	PRIMARY PLANET ASSEMBLY: RAMP WINCH C22057XC (36581)	B	EA	1				•	•	•	•	•	133	
XDHZZ		PIN, PLANET PIN LOCKING P241 (36581)	B	EA	3									133	1
XDHZZ		PIN, PRIMARY PLANET A22006 (36581)	B	EA	3									133	2
PAHZZ		SPACER, GEAR A22048 (36581)	B	EA	6				•	•	•	•	•	133	3
PAHZZ		BEARING, ROLLER H227 (36581)	B	EA	6				•	•	•	•	•	133	4
PAHZZ	5365-488-1571	RING, RETAINING: GEAR BEARING A22049 (36581)	B	EA	6				•	•	•	•	•	133	5
PAHZZ	5360-237-6805	SPRING, CAM A11033 (36581)	B	EA	6				•	•	•	•	•	133	6
PAHZZ		GEAR, PRIMARY PLANET A22007B (36581)	B	EA	3				•	•	•	•	•	133	7
XDHZZ		CAM, LOCK A22051 (36581)	B	EA	48									133	8

(1) SMR CODE	(2) FEDERAL STOCK NUMBER	(3) DESCRIPTION REF NUMBER & MFR CODE	USABLE ON CODE	(4) UNIT OF MEAS	(5) QTY INC IN UNIT	(6) 30-DAY DS MAINT ALLOWANCE (a) 1-20	(b) 21-50	(c) 51-100	(7) 30-DAY GS MAINT ALLOWANCE (a) 1-20	(b) 21-50	(c) 51-100	(8) 1-YR ALW PER 100 EQUIP CNTGY	(9) DEPOT MAINT ALW PER 100 EQUIP	(10) ILLUSTRATION (a) FIG. NO.	(b) ITEM NO.
XDHZZ		CLEARANCE, CAM LOCK, COPPER A22053 (36581)	B	EA	3									133	9
XDHZZ		PLUG, THRUST A11018 (36581)	B	EA	3									133	10
PAHZZ		BEARING, SLEEVE A22018 (36581)	B	EA	1				•	•	•	•	•	133	11
PAHZZ		PAD THRUST A22019 (36581)	B	EA	1				•	•	•	•	•	133	12
PCHZZ	5330-457-6915	PACKING, PREFORMED G220 (36581)	B	EA	1				•	•	•	•	•	133	13
XDHZZ		HUB, PRIMARY PLANET C22057 (36581)	B	EA	1									133	14
PAHHH	3950-119-0461	DRIVE ASSEMBLY, FINAL: RAMP WINCH C22029XS (36581)	BC	EA	1				•	•	•	•	•	134	
XDHZZ		HOUSING, FINAL DRIVE C22001 (36581)	BC	EA	1									134	1
PAHHH	3950-119-0460	PLANET ASSEMBLY, FINAL C22006XS (36581)	BC	EA	1				•	•	•	•	•	134	2
PAHZZ	5315-869-5104	PIN, FINAL PLANET A22001 (36581)	BC	EA	3				•	•	•	•	•	134	3
PAHZZ	3110-869-4649	BEARING, BALL H18 (36581)	BC	EA	6				•	•	•	•	•	134	4
PAHZZ	5365-854-3697	RING, RETAINING R258 (36581)	BC	EA	6				•	•	•	•	•	134	5
PAHZZ	3020-833-2869	GEAR, FINAL PLANET B22001 (36581)	BC	EA	3				•	•	•	•	•	134	6
PAHZZ	5315-481-9827	PIN, GEAR P233 (36581)	BC	EA	3				•	•	•	•	•	134	7
PAHZZ	3950-865-0124	HUB, FINAL PLANET C22006S (36581)	BC	EA	1				•	•	•	•	•	134	8
PAHZZ	3950-119-0462	PLATE, THRUST B22000 (36581)	BC	EA	1				•	•	•	•	•	134	9
XDHZZ		COVER, END C22002 (36581)	BC	EA	1									134	10
PCHZZ	5330-457-6917	PACKING, PREFORMED: END COVER G280 (36581)	BC	EA	1				•	•	•	•	•	134	11
PAHZZ	5365-462-4374	RING, RETAINING, SNAP: END COVER B22005 (36581)	BC	EA	1				•	•	•	•	•	134	12
XDHZZ		PLUG, PIPE: END COVER F67 (36581)	BC	EA	1									134	13
H PAHHH	3950-832-0156	DRIVE ASSEMBLY, PRIMARY D22017XEC (36581) (COMPONENTS SAME AS DRIVE ASSEMBLY, FSN 3950-120-9922, EXCEPT WHERE INDIVIDUAL COMPONENTS ARE ANNOTATED)	C	EA	1				•	•	•	•	•	135	
PAHHH	3950-120-9922	DRIVE ASSEMBLY, PRIMARY: WINCH D22005XC (36581)	B	EA	1				•	•	•	•	•	135	
C PAHZZ	5305-716-8128	SCREW, CAP, HEXAGON HEAD: SPRING COVER MTG MS90725-117 (96906)	BC	EA	12				•	•	•	•	•	135	1
C PAHZZ	5330-457-6937	PACKING W/RETAINER: SPRING COVER SCREW W141 (36581)	BC	EA	12				•	•	•	•	•	135	2

	(1) SMR CODE	(2) FEDERAL STOCK NUMBER	(3) DESCRIPTION REF NUMBER & MFR CODE	USABLE ON CODE	(4) UNIT OF MEAS	(5) QTY INC IN UNIT	(6) 30-DAY DS MAINT ALLOWANCE (a) 1-20	(b) 21-50	(c) 51-100	(7) 30-DAY GS MAINT ALLOWANCE (a) 1-20	(b) 21-50	(c) 51-100	(8) 1-YR ALW PER 100 EQUIP CNTGY	(9) DEPOT MAINT ALW PER 100 EQUIP	(10) ILLUSTRATION (a) FIG. NO.	(b) ITEM NO.
	XEHZZ		COVER, SPRING C22010 (36581)	BC	EA	1									135	3
	PCHZZ	5330-457-6917	PACKING, PREFORMED: SPRING COVER G280 (36581)	BC	EA	1				•	•	•	•	•	135	4
	PAHZZ	3950-918-3626	SPRING, BRAKE SHOE A22017 (36581)	BC	EA	2				•	•	•	•	•	135	5
	PCHZZ	5330-457-6916	PACKING, PREFORMED: SPRING COVER G276 (36581)	BC	EA	1				•	•	•	•	•	135	6
	PAHZZ	5365-462-4374	RING, RETAINING: SNAP, SEGMENT RETAINER B22005 (36581)	BC	EA	1				•	•	•	•	•	135	7
	PAHZZ	5365-461-5849	RETAINER, RING: SEGMENT B22011 (36581)	B	EA	1				•	•	•	•	•	135	8
	PAHZZ	3950-119-9847	SEGMENT, BRAKE A22027 (36581)	B	EA	20				•	•	•	•	•	135	9
	PAHZZ	3020-462-2152	GEAR, SUN, PRIMARY A22029 (36581)	B	EA	1				•	•	•	•	•	135	10
	PAHZZ	3950-119-0457	GEAR, RING B22003 (36581)	B	EA	1				•	•	•	•	•	135	11
	PAHZZ	3950-119-9848	PLATE, BACKING: BRAKE C22011 (36581)	BC	EA	1				•	•	•	•	•	135	12
	PAHZZ	3950-119-0458	PLATE, BRAKE M179 (36581)	B	EA	2				•	•	•	•	•	135	13
H	PAHZZ	2590-227-8349	PLATE, BRAKE M181 (36581)	C	EA	1				•	•	•	•	•	135	13
	PAHZZ	3950-119-0459	PLATE, DIVIDER B22014 (36581)	B	EA	1				•	•	•	•	•	135	14
H	PAHZZ	2590-227-8347	PLATE, PRESSURE B22047 (36581)	C	EA	1				•	•	•	•	•	135	15
H	PAHZZ		SPACER A22076 (36581)	C	EA	1				•	•	•	•	•	135	16
H	PAHZZ	5365-869-5098	RING, SNAP R90 (36581)	C	EA	2				•	•	•	•	•	135	17
H	PAHZZ	3950-864-8525	RING, BRAKE B22045 (36581)	C	EA	1				•	•	•	•	•	135	18
	PCHZZ	5330-400-5353	PACKING, PREFORMED: SEAL RING G252 (36581)	BC	EA	1				•	•	•	•	•	135	19
	PCHZZ	5330-368-6252	SEAL, PLAIN, ENCASED: HOUSING U141 (36581)	BC	EA	1				•	•	•	•	•	135	20
	PAHZZ	2590-227-8350	RING, SEALING: HOUSING A22065 (36581)	BC	EA	1				•	•	•	•	•	135	21
	PAHZZ	5365-461-5848	RING, SNAP: SEALING RING R290 (36581)	BC	EA	1				•	•	•	•	•	135	22
	XDHZZ		HOUSING, PRIMARY DRIVE C22012 (36581)	B	EA	1									135	23
	XDHZZ		HOUSING, PRIMARY DRIVE C22047 (36581)	C	EA	1									135	23
	PAHZZ	4730-879-8370	PLUG, PIPE: HOUSING F56 (36581)	BC	EA	4				•	•	•	•	•	135	24
	PAHZZ	4730-879-8381	PLUG, PIPE: HOUSING F63 (36581)	BC	EA	1				•	•	•	•	•	135	25
4	PAHHH	3950-832-0162	PRIMARY PLANET C22058X (36581)	C	EA	1				•	•	•	•	•	136	
H	PAHZZ	5315-482-1588	PIN P227 (36581)	C	EA	3				•	•	•	•	•	136	1

	(1) SMR CODE	(2) FEDERAL STOCK NUMBER	(3) DESCRIPTION REF NUMBER & MFR CODE	USABLE ON CODE	(4) UNIT OF MEAS	(5) QTY INC IN UNIT	(6) 30-DAY DS MAINT ALLOWANCE (a) 1-20	(b) 21-50	(c) 51-100	(7) 30-DAY GS MAINT ALLOWANCE (a) 1-20	(b) 21-50	(c) 51-100	(8) 1-YR ALW PER 100 EQUIP CNTGY	(9) DEPOT MAINT ALW PER 100 EQUIP	(10) ILLUSTRATION (a) FIG. NO.	(b) ITEM NO.
N	PAHZZ	5315-832-1843	PIN, PRIMARY PLANET A22072 (36581)	C	EA	3				*	*	*	*	*	136	2
N	PAHZZ	3110-869-4651	BEARING, NEEDLE HH88 (36581)	C	EA	3				*	*	*	*	*	136	3
N	PAHZZ	3020-922-0115	GEAR, PRIMARY PLANET A22075 (36581)	C	EA	3				*	*	*	*	*	136	4
N	PAHZZ	5365-481-9811	PLUG, THRUST A11018 (36581)	C	EA	3				*	*	*	*	*	136	5
N	PAHZZ	3120-922-4137	BUSHING A22074 (36581)	C	EA	1				*	*	*	*	*	136	6
N	XDHZZ		PAD, THRUST A22019 (36581)	C	EA	1									136	7
N	PCHZZ	5330-457-6915	PACKING, PREFORMED G220 (36581)	C	EA	1				*	*	*	*	*	136	8
N	PAHZZ	3950-832-0163	HUB, PRIMARY PLANET C22059 (36581)	C	EA	1				*	*	*	*	*	136	9
N	PAHHH	3950-869-8552	BRAKE HUB ASSEMBLY A22073XC (36581)	C	EA	1				*	*	*	*	*	137	
N	PAHZZ	3020-833-2858	GEAR, PRIMARY SUN B22046 (36581)	C	EA	1				*	*	*	*	*	137	1
N	PAHZZ	5365-922-6096	SPACER A22078 (36581)	C	EA	2				*	*	*	*	*	137	2
N	PAHZZ	3110-869-4648	ROLLER A22079 (36581)	C	EA	64				*	*	*	*	*	137	3
N	PAHZZ	5365-890-4910	RING, SNAP A22077 (36581)	C	EA	2				*	*	*	*	*	137	4
N	PAHZZ		SPRING, GARTER A22080 (36581)	C	EA	2				*	*	*	*	*	137	5
N	PAHZZ	3950-869-9990	CAM LOCK A22051 (36581)	C	EA	28				*	*	*	*	*	137	6
N	PAHZZ	3950-869-8565	HUB, BRAKE A22073 (36581)	C	EA	1				*	*	*	*	*	137	7
N	PAHZZ	5365-869-5099	RING, SNAP R49 (36581)	C	EA	1				*	*	*	*	*	137	8
			GROUP 73 - VALVE, RAMP CONTROL													
	PAGHH	2030-110-3447	VALVE, RAMP: CONTROL CMEND2R20BL30 (62983)	A	EA	1	*	*	*	*	*	*	*	*	138	
	PAHZZ	5340-811-6643	RING, RETAINING: LEVER ASSEMBLY MS16633-50 (96906)	A	EA	2				*	*	*	*	*	138	1
	XDHZZ		LINK, VALVE, LEVER: RAMP CONTROL 261342 (62983)	A	EA	1									138	2
	XDHZZ		LEVER, WINCH: CONTROL VALVE 261768 (62983)	A	EA	1									138	3
	PAHZZ	5365-453-6632	RING, RETAINING: FULCRUM ROD 262711 (62983)	A	EA	2				*	*	*	*	*	138	4
	XDHZZ		ROD, FULCRUM: WINCH CONTROL VALVE 262721 (62983)	A	EA	1									138	5
	PAHZZ	5310-833-9301	NUT, WINCH, CONTROL VALVE: STUD 1458 (62983)	A	EA	5				*	*	*	*	*	138	6
	XDHZZ		STUD, WINCH: CONTROL VALVE 260786 (62983)	A	EA	5									138	7

(1) SMR CODE	(2) FEDERAL STOCK NUMBER	(3) DESCRIPTION REF NUMBER & MFR CODE	USABLE ON CODE	(4) UNIT OF MEAS	(5) QTY INC IN UNIT	(6) 30-DAY DS MAINT ALLOWANCE (a) 1-20	(b) 21-50	(c) 51-100	(7) 30-DAY GS MAINT ALLOWANCE (a) 1-20	(b) 21-50	(c) 51-100	(8) 1-YR ALW PER 100 EQUIP CNTGY	(9) DEPOT MAINT ALW PER 100 EQUIP	(10) ILLUSTRATION (a) FIG. NO.	(b) ITEM NO.
PAHZZ	4820-456-1155	BODY AND SPOOL ASSEMBLY CHEW02R20B30 (62983)	A	EA	1				•	•	•	•	•	138	
XDHZZ		PLUG, WINCH: CONTROL VALVE 261791 (62983)	A	EA	1									138	8
PAHZZ	4730-674-6831	PLUG, RELIEF, VALVE 186580 (62983)	A	EA	1				•	•	•	•	•	138	9
KFHZZ		PACKING, PREFORMED: RING CONTROL VALVE 154129 (62983) (PART OF KIT, FSN 4820-945-9018)	A	EA	1									138	10
PAHZZ	3930-918-1920	SPRING, RELIEF, VALVE 259871 (62983)	A	EA	1				•	•	•	•	•	138	11
PAHZZ	2530-034-4188	VALVE, CONTROL: SUBASSEMBLY 232799 (62983)	A	EA	1				•	•	•	•	•	138	12
PAHZZ	5306-833-3644	BOLT, MACHINE: VALVE CAP 1248 (62983)	A	EA	2				•	•	•	•	•	138	13
XDHZZ		CAP, WINCH: CONTROL VALVE 257196 (62983)	A	EA	1									138	14
XDHZZ		SCREW, SELF-LOCK: SPOOL GUIDE 1050 (62983)	A	EA	1									138	15
PAHZZ	4820-839-1480	GUIDE, VALVE, SPOOL 242079 (62983)	A	EA	1				•	•	•	•	•	138	16
XDHZZ		RETAINER: SPOOL, SPRING 206086 (62983)	A	EA	2									138	17
PAHZZ	3930-918-3760	SPRING: SPOOL RETURN 206772 (62983)	A	EA	1				•	•	•	•	•	138	18
XDHZZ		RETAINER: VALVE SPOOL 242076 (62983)	A	EA	1									138	19
KFHZZ		PACKING, PREFORMED: O RING 154018 (62983) (PART OF KIT, FSN 4820-945-9018)	A	EA	2									138	20
PAHZZ	4730-839-1522	PLUG, POPPET, VALVE 242074 (62983)	A	EA	1				•	•	•	•	•	138	21
KFHZZ		RETAINER, POPPET: VALVE PLUG, SEAL 112694 (62983) (PART OF KIT, FSN 4820-945-9018)	A	EA	1									138	22
KFHZZ		PACKING, PREFORMED: RING, POPPET VALVE 154010 (62983) (PART OF KIT, FSN 4820-945-9018)	A	EA	1									138	23
PAHZZ	3930-918-3761	SPRING, POPPET: VALVE 242789 (62983)	A	EA	1				•	•	•	•	•	138	24
PAHZZ	4820-839-1512	POPPET, VALVE 242075 (62983)	A	EA	1				•	•	•	•	•	138	25
KFHZZ		RING, SEAL: VALVE BODY 226157 (62983) (PART OF KIT, FSN 4820-945-9018)	A	EA	4									138	26
KFHZZ		RING, SEAL: VALVE BODY 226163 (62983) (PART OF KIT, FSN 4820-945-9018)	A	EA	1									138	27
XAHZZ		BODY, VALVE CHEW02L30 (62983)	A	EA	1									138	28

(1) SMR CODE	(2) FEDERAL STOCK NUMBER	(3) DESCRIPTION REF NUMBER & MFR CODE	USABLE ON CODE	(4) UNIT OF MEAS	(5) QTY INC IN UNIT	(6) 30-DAY OS MAINT ALLOWANCE (a) 1-30	(b) 31-99	(c) 31-100	(7) 30-DAY OS MAINT ALLOWANCE (a) 1-30	(b) 31-99	(c) 31-100	(8) 1-YR ALW PER 100 EQUIP CNTGY	(9) DEPOT MAINT ALW PER 100 EQUIP	(10) ILLUSTRATION (a) FIG. NO.	(b) ITEM NO.
PACHH	2030-113-9457	VALVE, RAMP: CONTROL CAGNCR REOBL30 (62983)	BC	EA	1	•	•	•	•	•	•	•	•	139	
PAHZZ	4730-701-9369	PLUG, PIPE: OUTLET SECTION 7078 (62983)	BC	EA	1				•	•	•	•	•	139	1
PAHZZ	5310-005-6231	NUT, PLAIN, HEXAGON: VALVE SECTION 1462 (62983)	BC	EA	4				•	•	•	•	•	139	2
XDHZZ		STUD: VALVE SECTION MTG 280764 (62983)	BC	EA	4									139	3
PAHZZ	5305-003-9476	SCREW, CAP, HEXAGON HEAD: PLATE MTG 1272 (62983)	BC	EA	4				•	•	•	•	•	139	4
XDHZZ		PLATE 208093 (62983)	BC	EA	1									139	5
KFHZZ		PACKING, PREFORMED: PLATE 154023 (62983) (PART OF KIT, FSN 2030-113-9459)	BC	EA	1									139	6
PAHZZ	5340-491-1672	PLUG, PIPE: HOUSING 237159 (62983)	BC	EA	1				•	•	•	•	•	139	7
PAHZZ	4730-864-6120	PLUG: VALVE ASSEMBLY 295688 (62983)	BC	EA	1				•	•	•	•	•	139	8
KFHZZ		PACKING, PREFORMED: VALVE PLUG 154132 (62983) (PART OF KIT, FSN 2030-113-9459)	BC	EA	1									139	9
PAHZZ	5340-833-3648	SPRING, VALVE 238834 (62983)	BC	EA	1				•	•	•	•	•	139	10
PAHZZ	2030-113-9454	VALVE SUBASSEMBLY, CONTROL 232840 (62983)	BC	EA	1				•	•	•	•	•	139	11
KFHZZ		PACKING, PREFORMED: BODY 221447 (63977) (PART OF KIT, FSN 2030-113-9459)	BC	EA	1									139	12
KFHZZ		PACKING, PREFORMED: BODY 226191 (62983) (PART OF KIT, FSN 2030-113-9459)	BC	EA	4									139	13
PAHZZ	5305-450-7500	SCREW, CAP, HEXAGON HEAD: CAP MTG 1270 (62983)	BC	EA	2				•	•	•	•	•	139	14
XDHZZ		CAP, END 237149 (62983)	BC	EA	1									139	15
PAHZZ	5305-450-7899	SCREW, MACHINE: GUIDE MTG 1071 (62983)	BC	EA	1				•	•	•	•	•	139	16
PAHZZ	2030-113-9456	GUIDE, VALVE 237150 (62983)	BC	EA	1				•	•	•	•	•	139	17
PAHZZ	5340-450-6012	RETAINER 237151 (62983)	BC	EA	2				•	•	•	•	•	139	18
PAHZZ	5360-459-9985	SPRING 209755 (62983)	BC	EA	1				•	•	•	•	•	139	19
XDHZZ		RETAINER 237152 (62983)	BC	EA	1									139	20
KFHZZ		PACKING, PREFORMED: O RING AN6227-23 (88044) (PART OF KIT, FSN 2030-113-9459)	BC	EA	2									139	21
PAHZZ	2030-113-9455	POPPET 237160 (62983)	BC	EA	1				•	•	•	•	•	139	22

(1) SMR CODE	(2) FEDERAL STOCK NUMBER	(3) DESCRIPTION — REF NUMBER & MFR CODE	USABLE ON CODE	(4) UNIT OF MEAS	(5) QTY INC IN UNIT	(6) 30-DAY DS MAINT ALLOWANCE (a) 1-20	(b) 21-50	(c) 51-100	(7) 30-DAY GS MAINT ALLOWANCE (a) 1-20	(b) 21-50	(c) 51-100	(8) 1-YR ALW PER 100 EQUIP CNTGY	(9) DEPOT MAINT ALW PER 100 EQUIP	(10) ILLUSTRATION (a) FIG. NO.	(b) ITEM NO.
PANZZ	5360-458-2051	SPRING 237452 (62983)	BC	EA	1				•	•	•	•	•	139	23
KFNZZ		PACKING, PREFORMED: O RING 154013 (62983) (PART OF KIT, FSN 2030-113-9459)	BC	EA	1									139	24
KFNZZ		RING, REINFORCING 131038 (62983) (PART OF KIT, FSN 2030-113-9459)	BC	EA	1									139	25
XDNZZ		PLUG, PIPE: POPPET 261792 (62983)	BC	EA	1									139	26
PANZZ	2030-113-9458	OUTLET, SECTION CM3K02L30 (62983)	BC	EA	1				•	•	•	•	•	139	27
H MOOZZ		CHAIN, SINGLE, JACK: CONTROL LEVER PIN RETAINER 145-4510923-86 (80064) MANUFACTURE FROM:	C	EA	1									139	28
H PAOZZ	4010-228-9963	CHAIN, SINGLE, JACK, NO. 10, AS REQUIRED RRC27ICLASS7 (81348)		FT		•	•	•	•	•	•			139	
H PAOZZ	5315-982-1348	PIN, SHEAR DETENT: RAMP VALVE CONTROL LEVER PIN NO4AUDELBLDC17OCRES (90173)	C	EA	1	•	•	•	•	•	•	•	•	139	29
H PAOZZ	5315-842-3044	PIN, COTTER: RAMP CONTROL LEVER PINS, 3/32 IN. DIA, 3/4 IN. LG MS24665-283 (96906)	C	EA	1	•	•	•	•	•	•	•	•	139	30
H PAOZZ	5310-880-5977	WASHER: RAMP CONTROL LEVER, 5/16 IN. SCREW SIZE MS15795-811 (96906)	C	EA	8	•	•	•	•	•	•	•	•	139	31
H PAOZZ	5315-982-1869	PIN, CLEVIS: RAMP CONTROL LEVER, 5/16 IN. DIA, 2 IN. LG 5-161MX2INLGHD (75301)	C	EA	1	•	•	•	•	•	•	•	•	139	32
H MHOZZ		BAR ROUND: RAMP CONTROL VALVE HANDLE 145-4510923-51 (80064) MANUFACTURE FROM:	C	EA	1									139	33
H PAHZZ	9530-236-7718	ROD, ROUND, 1 IN. DIA, AS REQUIED QQA225-8 (81348)		FT					•	•	•			139	
H PAOZZ	5315-842-3044	PIN, COTTER: RAMP CONTROL LEVER PIN, 3/32 IN. DIA, 3/4 IN. LG MS24665-283 (96906)	C	EA	1	•	•	•	•	•	•	•	•	139	34
H PAOZZ		PIN, CLEVIS: RAMP CONTROL LEVER, 5/16 IN. DIA, 1 1/8 IN. LG 5-161MX1-1-8INLG (75301)	C	EA	2	•	•	•	•	•	•	•	•	139	35
H MHOZZ		BAR ROUND: RAMP CONTROL LEVER TO PILOT LEVER 145-4510923-64 (80064) MANUFACTURE FROM:	C	EA	1									139	36
H PAHZZ	9530-236-7718	BAR, ROUND, 1 IN. DIA, AS REQUIRED QQA225-8 (81348)		FT					•	•	•			139	
H PAOZZ	5315-039-0491	PIN, COTTER: RAMP CONTROL LEVER, 1/8 IN. DIA, 1 1/4 IN. LG MS24665-372 (96906)	C	EA	1	•	•	•	•	•	•	•	•	139	37
H PAOZZ	5310-886-3069	WASHER: RAMP CONTROL LEVER PIN 9988851-2 (18876)	C	EA	1	•	•	•	•	•	•	•	•	139	38
H PAOZZ		PIN, CLEVIS: RAMP CONTROL VALVE, 5/8 IN. DIA, 1 5/8 IN. LG 5-81MX1-5-8INLG (75301)	C	EA	1	•	•	•	•	•	•	•	•	139	39

(1) SMR CODE	(2) FEDERAL STOCK NUMBER	(3) DESCRIPTION REF NUMBER & MFR CODE	USABLE ON CODE	(4) UNIT OF MEAS	(5) QTY INC IN UNIT	(6) 30-DAY DS MAINT ALLOWANCE (a) 1-30	(b) 31-99	(c) 31-100	(7) 30-DAY GS MAINT ALLOWANCE (a) 1-30	(b) 31-99	(c) 31-100	(8) 1-YR ALW PER 100 EQUIP CNTGY	(9) DEPOT MAINT ALW PER 100 EQUIP	(10) ILLUSTRATION (a) FIG NO.	(b) ITEM NO.
N MHOZZ		BAR, ROUND: RAMP CONTROL VALVE LEVER 145-4510923-65 (80064) MANUFACTURE FROM:	C	EA	1									139	40
N PAHZZ	9530-236-7718	BAR, ROUND, 1 IN. DIA, AS REQUIRED QQA225-8 (81348)		FT					•	•	•			139	
N PAOZZ	5975-642-7265	NUT, LOCK: RAMP CONTROL ROD, CONNECTOR, 1 1/4 IN. WF408 (81348)	C	EA	1	•	•	•	•	•	•	•	•	139	41
N PAOZZ	5330-861-0526	SEALING, O RING: RAMP CONTROL ROD, CONNECTOR, 1 1/4 IN. 5265 (59730)	C	EA	1	•	•	•	•	•	•	•	•	139	42
N PAHZZ	5975-583-2960	CONNECTOR WATERTIGHT: RAMP CONTROL VALVE ROD THRU DECK 2559 (59730)	C	EA	1				•	•	•	•	•	139	43
N MHOZZ		BAR, FLAT: RAMP CONTROL LEVER 145-4510923-52 (80064) MANUFACTURE FROM:	C	EA	2										
N PAHZZ	9530-237-0721	BAR, FLAT, 1/4 IN. THK X 1 1/4 IN. WIDE, AS REQUIRED QQA200-8QRQQA225-8 (81348)		FT					•	•	•				
N PAOZZ	5306-227-0872	BOLT, MACHINE: RAMP CONTROL LEVER, 5/16-18 THD SIZE, 2 IN. LG NORS (33333)	C	EA	1	•	•	•	•	•	•	•	•		
N PCHZZ	4820-945-9018	SEAL, KIT: WINCH CONTROL VALVE 922926 (62983) (CONSISTS OF)	A	EA	1				•	•	•	•	•	138	
		1-PACKING, PREFORMED												138	10
		2-PACKING, PREFORMED												138	20
		1-RETAINER												138	22
		1-PACKING, PREFORMED												138	23
		4-RING												138	26
		1-RING												138	27
N PCHZZ	2030-113-9459	KIT, SEAL: RAMP CONTROL VALVE 922927 (62983) (CONSISTS OF)	BC	EA	1				•	•	•	•	•	139	
		1-PACKING, PREFORMED												139	6
		1-PACKING, PREFORMED												139	9
		1-PACKING, PREFORMED												139	12
		4-PACKING, PREFORMED												139	13
		2-PACKING, PREFORMED												139	21
		1-PACKING, PREFORMED												139	24
		1-RING												139	25
		GROUP 74 - FILTER STRAINERS													
N PBOOO	4330-004-0748	FILTER HYDRAULIC: RAMP HOIST AFBA01-2 (02249) (COMPONENTS SAME AS FILTER, FSN 4330-452-8112, EXCEPT WHERE INDIVIDUAL COMPONENTS ARE ANNOTATED)	C	EA	1	•	•	•	•	•	•	•	•	140	

(1) SMR CODE	(2) FEDERAL STOCK NUMBER	(3) DESCRIPTION — REF NUMBER & MFR CODE	USABLE ON CODE	(4) UNIT OF MEAS	(5) QTY INC IN UNIT	(6) 30-DAY DS MAINT ALLOWANCE (a) 1-30	(b) 31-50	(c) 51-100	(7) 30-DAY GS MAINT ALLOWANCE (a) 1-30	(b) 31-50	(c) 51-100	(8) 1-YR ALW PER 100 EQUIP CNTGY	(9) DEPOT MAINT ALW PER 100 EQUIP	(10) ILLUSTRATION (a) FIG. NO.	(b) ITEM NO.
PBOOO	4320-462-2157	FILTER, HYDRAULIC: RAMP HOIST RETURN LINE MFB403-2 (02249) (COMPONENTS SAME AS FILTER, FSN 4330-454-8112, EXCEPT WHERE INDIVIDUAL COMPONENTS ARE ANNOTATED)	B	EA	1	•	•	•	•	•	•	•	•	140	
PBOOO	4330-454-8112	FILTER, HYDRAULIC: RAMP HOIST RETURN LINE, 1 1/2 IN. NPT MFB401 (02249)	A	EA	1	•	•	•	•	•	•	•	•	140	
PAOZZ	4730-879-8363	PLUG, PIPE: FILTER HEAD, 1/8-27 THD SIZE 015 (02249)		EA	2	•	•	•	•	•	•	•	•	140	1
PAOZZ	6685-068-2699	INDICATOR, FILTER 1568 (02249)		EA	2	•	•	•	•	•	•	•	•	140	2
C PAOZZ	5310-151-8837	NUT, LOCK: BY-PASS VALVE RETAINER 1579 (02249)		EA	2	•	•	•	•	•	•	•	•	140	3
PAOZZ	2520-891-1920	VALVE: BY-PASS FILTER 1573 (02249)		EA	2	•	•	•	•	•	•	•	•	140	4
PAOZZ	2590-089-4449	GUIDE: BY-PASS VALVE 1572 (02249)		EA	2	•	•	•	•	•	•	•	•	140	5
PAOZZ	2590-089-4451	SPACER: BY-PASS VALVE FILTER 1569 (02249)		EA	1	•	•	•	•	•	•	•	•	140	6
PAOZZ	5360-443-6116	SPRING: BY-PASS FILTER 1570 (02249)		EA	2	•	•	•	•	•	•	•	•	140	7
C PAOZZ	3930-934-0501	CAP: BY-PASS SPRING STEM 1574 (02249)		EA	2	•	•	•	•	•	•	•	•	140	8
C PAOZZ	5305-152-0550	SCREW, SELF-LOCK: BY-PASS VALVE 1578 (02249)		EA	1	•	•	•	•	•	•	•	•	140	9
PCOZZ	5330-920-8463	PACKING, PREFORMED: HOUSING SEAL 1576 (02249)		EA	2	•	•	•	•	•	•	•	•	140	10
PCOZZ	5310-843-3496	WASHER, FILTER, BASE: 1 1/4 IN. OD 1564 (02249)	AB	EA	4	•	•	•	•	•	•	•	•	140	11
N PCOZZ	5330-762-6018	SEAL RUBBER: BASE 3274 (02249)	C	EA	4	•	•	•	•	•	•	•	•	140	11
N PAOZZ	5310-151-8839	WASHER, BACKUP 3277 (02249)	C	EA	2	•	•	•	•	•	•	•	•	140	12
PAOZZ	5310-071-3235	WASHER, FLAT: FILTER WASHER 1565 (02249)	AB	EA	4	•	•	•	•	•	•	•	•	140	12
PAOZZ	3930-136-5066	FILTER, ELEMENT: 10 MICRON, PAPER 3293 (02249)		EA	2	•	•	•	•	•	•	•	•	140	13
PAOZZ	2590-089-4450	SPRING, FILTER: SEAT 1563 (02249)		EA	2	•	•	•	•	•	•	•	•	140	14
XDOZZ		HOUSING, FILTER HEAD 1557 (02249)		EA	2									140	15
N PCOZZ	5310-071-3234	WASHER, FLAT: CENTER POST, HOUSING SEAL 1575 (02249)		EA	2	•	•	•	•	•	•	•	•	140	16
XDOZZ		POST, CENTER 1559 (02249)	BC	EA	2									140	17
XDOZZ		POST, CENTER: FILTER, HYDRAULIC 1561 (02249)	A	EA	2									140	17
XDOZZ		HEAD, FILTER: HYDRAULIC 1587 (02249)		EA	1									140	18
PAOZZ	4730-457-8343	STRAINER, SUCTION LINE: RAMP HOIST MP75 (05160)	A	EA	1	•	•	•	•	•	•	•	•	141	

(1) SMR CODE	(2) FEDERAL STOCK NUMBER	(3) DESCRIPTION REF NUMBER & MFR CODE	USABLE ON CODE	(4) UNIT OF MEAS	(5) QTY INC IN UNIT	(6) 30-DAY DS MAINT ALLOWANCE (a) 1-20	(b) 21-50	(c) 51-100	(7) 30-DAY GS MAINT ALLOWANCE (a) 1-20	(b) 21-50	(c) 51-100	(8) 1-YR ALW PER 100 EQUIP CNTGY	(9) DEPOT MAINT ALW PER 100 EQUIP	(10) ILLUSTRATION (a) FIG. NO.	(b) ITEM NO.
XAOZZ		HOUSING, STRAINER 201132 (05160)	A	EA	1									141	1
PAOZZ	4320-454-7875	INDICATOR, VACUUM MF360 (05160)	A	EA	1	•	•	•	•	•	•	•	•	141	2
PCOZZ	4730-088-4550	SEAL, SET, STRAINER 200882 (05160)	A	EA	1	•	•	•	•	•	•	•	•	141	3
PAOZZ	4330-456-1372	ELEMENT, 140 MICRON 201164 (05160)	A	EA	1	•	•	•	•	•	•	•	•	141	4
PCOZZ	4730-097-9771	SEAL, BODY: STRAINER 201177 (05160)	A	EA	1	•	•	•	•	•	•	•	•	141	5
XAOZZ		COVER, STRAINER 200879 (05160)	A	EA	1									141	6
XDOZZ		SPRING, STRAINER ELEMENT 200885 (05160)	A	EA	1									141	7
XAOZZ		ELEMENT, CENTER 200174 (05160)	A	EA	1									141	8
XDOZZ		BOLT, STRAINER COVER 908730 (05160)	A	EA	2									141	
PAHZZ	4820-640-6813	VALVE, GATE, BRONZE: 2 1/2 IN. WWV54CLASSATYPE1 (81348)	A	EA	1				•	•	•	•	•		
C PBOZZ	4330-489-0311	STRAINER, TANK: RAMP HOIST J75-600-100-21-2NPTF (84276)	BC	EA	2	•	•	•	•	•	•	•	•		
		GROUP 75 - RELIEF VALVE													
PAOHH	4820-607-1705	VALVE, RELIEF: RAMP HOIST CT10F10 (62983)	A	EA	1	•	•	•	•	•	•	•	•	142	
XDHZZ		SCREW, SELF-LOCK: RELIEF VALVE COVER TO BODY 1115 (62983)	A	EA	4									142	1
XDHZZ		COVER, SUBASSEMBLY: RELIEF VALVE 925257 (62983)	A	EA	1									142	
XDHZZ		SCREW, SELF-LOCK: KNOB RETAINER 114691 (62983)	A	EA	1									142	2
XDHZZ		PLATE, RELIEF VALVE: KNOB RETAINER 124735 (62983)	A	EA	1									142	3
XDHZZ		KNOB, RELIEF VALVE 124264 (62983)	A	EA	1									142	4
XDHZZ		NUT, ADJUSTING SCREW 1487 (62983)	A	EA	1									142	5
XDHZZ		SCREW, SELF-LOCK: ADJUSTING RELIEF VALVE 130730 (62983)	A	EA	1									142	6
XDHZZ		RETAINER, PLUNGER: RELIEF VALVE SCREW 2704 (62983)	A	EA	1									142	7
XDHZZ		PLUNGER, RELIEF VALVE 130729 (62983)	A	EA	1									142	8
PCHZZ	5330-562-1071	PACKING, PREFORMED: O RING 154004 (62983)	A	EA	1				•	•	•	•	•	142	9
PAHZZ	5310-741-7277	SPACER, RELIEF VALVE 130735 (62983) (AS REQUIRED)	A	EA	V				•	•	•	•	•	142	10
XDHZZ		BUSHING, RELIEF, VALVE: PLUNGER 130728 (62983)	A	EA	1									142	11

(1) SMR CODE	(2) FEDERAL STOCK NUMBER	(3) DESCRIPTION REF NUMBER & MFR CODE	USABLE ON CODE	(4) UNIT OF MEAS	(5) QTY INC IN UNIT	(6) 30-DAY DS MAINT ALLOWANCE (a) 1-20	(b) 21-50	(c) 51-100	(7) 30-DAY GS MAINT ALLOWANCE (a) 1-20	(b) 21-50	(c) 51-100	(8) 1-YR ALW PER 100 EQUIP CNTGY	(9) DEPOT MAINT ALW PER 100 EQUIP	(10) ILLUSTRATION (a) FIG. NO.	(b) ITEM NO.
PCHZZ	5330-551-0471	PACKING, PREFORMED: O RING, BUSH SEAL 154012 (62983)	A	EA	1				•	•	•	•	•	142	12
PAHZZ	4320-291-1180	SPRING, RELIEF VALVE 2281 (62983)	A	EA	1				•	•	•	•	•	142	13
H XDHZZ		PISTON, RELIEF VALVE 82800 (62983)	A	EA	1									142	14
XDHZZ		PLUG, RELIEF VALVE: THREADED 7076 (62983)	A	EA	1									142	15
XDHZZ		PLUG, RELIEF VALVE: SPACER 211159 (62983)	A	EA	1									142	16
XDHZZ		SEAT, RELIEF, VALVE PISTON 109680 (62983)	A	EA	1									142	17
XAHZZ		COVER, RELIEF, VALVE: HOUSING 106610 (62983)	A	EA	1									142	18
PCHZZ	5330-506-4043	PACKING, PREFORMED: RELIEF VALVE 154078 (62983)	A	EA	1				•	•	•	•	•	142	19
PAHZZ	3010-530-8321	SPRING, RELIEF, VALVE: BODY 2090 (62983)	A	EA	1				•	•	•	•	•	142	20
XDHZZ		PISTON, RELIEF, VALVE: BODY 51563 (62983)	A	EA	1									142	21
XDHZZ		SEAT, RELIEF, VALVE: BODY 2732 (62983)	A	EA	1									142	22
XAHZZ		BODY, RELIEF VALVE 106020 (62983)	A	EA	1									142	23
PAHZZ	5305-855-0968	SCREW, SELF-LOCK: NAMEPLATE MS24629-10 (96906)	A	EA	2				•	•	•	•	•	142	24
		GROUP 76 - CHECK VALVE													
C PAOZZ	4820-462-7797	VALVE, CHECK: HYDRAULIC RAMP D4-185 (24785)	BC	EA	2	•	•	•	•	•	•	•	•	143	
C PAHZZ	5305-004-1579	SCREW, CAP, SOCKET HEAD: CAP MTG 83-15083-05 (24785)	BC	EA	6				•	•	•	•	•	143	1
C XAHZZ		CAP, SPOOL 10-02703-02 (24785)	BC	EA	1									143	2
C PCHZZ	5330-458-2085	PACKING, PREFORMED: CAP 82-20220-01 (24785)	BC	EA	1				•	•	•	•	•	143	3
C XDHZZ		SPRING, SPOOL 10-00329-02 (24785)	BC	EA	1									143	4
C XDHZZ		SPOOL, OIL CONTROL 10-00941-02 (24785)	BC	EA	1									143	5
C XAHZZ		BODY, CHECK VALVE 10-04037-05 (24785)	BC	EA	1									143	6
C PAOZZ	4820-462-7501	VALVE, CHECK: RAMP HOIST DC1000 (91561)	A	EA	2	•	•	•	•	•	•	•	•		
C PAOZZ	4820-439-6044	VALVE, BALL: RAMP HOIST 11N444Y8SE (98991)	BC	EA	2	•	•	•	•	•	•	•	•		
		GROUP 77 - COUNTERBALANCE VALVE													
PAOHH	4820-462-7792	VALVE, COUNTERBALANCE: RAMP HOIST WINCH 342-1850 (24785) (COMPONENTS SAME AS VALVE, FSN 4820-456-1145, EXCEPT WHERE INDIVIDUAL COMPONENTS ARE ANNOTATED)	BC	EA	1	•	•	•	•	•	•	•	•	144	

	(1) SMR CODE	(2) FEDERAL STOCK NUMBER	(3) DESCRIPTION REF NUMBER & MFR CODE	USABLE ON CODE	(4) UNIT OF MEAS	(5) QTY INC IN UNIT	(6) 30-DAY DS MAINT ALLOWANCE (a) 1-30	(b) 21-50	(c) 51-100	(7) 30-DAY GS MAINT ALLOWANCE (a) 1-30	(b) 21-50	(c) 51-100	(8) 1-YR ALW PER 100 EQUIP CNTGY	(9) DEPOT MAINT ALW PER 100 EQUIP	(10) ILLUSTRATION (a) FIG. NO.	(b) ITEM NO.
	PAOHH	4820-456-1145	VALVE, COUNTERBALANCE: RAMP HOIST WINCH SA2-185B1TK44 (24785)	A	EA	1	•	•	•	•	•	•	•	•	144	
C	PAHZZ	5305-983-7462	SCREW, CAP, SOCKET HEAD: BOTTOM CAP MTG, 3/8-16 THD SIZE, 1 1/2 IN. LG MS16997-143 (96906)		EA	7				•	•	•	•	•	144	1
C	PAHZZ	5305-978-9994	SCREW, CAP, SOCKET HEAD: BOTTOM CAP MTG, 3/8-16 THD SIZE, 1 IN. LG MS16997-99 (96906)		EA	3				•	•	•	•	•	144	2
	XDHZZ		CAP, BOTTOM: COUNTERBALANCE VALVE 10-02059-02 (24785)		EA	1									144	3
	PAHZZ	5340-212-5074	SPRING, VALVE: FLOW CONTROL 10-00329-02 (24785)		EA	1				•	•	•	•	•	144	4
	PAHZZ	4820-462-2154	SPOOL, VALVE: FLOW CONTROL 10-00941-02 (24785)		EA	1				•	•	•	•	•	144	5
	XDHZZ		PLUG, PIPE: COUNTERBALANCE VALVE, SOCKET HEAD, 1/2-14 THD SIZE 84-01312-02 (24785)		EA	1									144	6
	PAHZZ	4820-462-7793	PLUNGER, COUNTERBALANCE VALVE 10-02523-02 (24785)		EA	1				•	•	•	•	•	144	7
	PCHZZ	5330-198-6190	PACKING, PREFORMED: BASE, HOUSING AN6227-27 (88044)		EA	1				•	•	•	•	•	144	8
	PCHZZ	5330-194-3706	PACKING, PREFORMED AN6230B2 (88044)		EA	1				•	•	•	•	•	144	9
	PAHZZ	4820-456-1153	SEAT: VALVE FLOW CONTROL 10-00942-02 (24785)		EA	1				•	•	•	•	•	144	10
C	PAHZZ	5305-983-7424	SCREW, CAP, SOCKET HEAD: TOP CAP, 3/8-16 THD SIZE, 1 1/4 IN. LG SP574 (24785)		EA	6				•	•	•	•	•	144	11
	XDHZZ		CAP: TOP COUNTERBALANCE VALVE 10-01811-02 (24785)		EA	1									144	12
	PCHZZ	3820-599-4426	GASKET: TOP CAP 10-00961-02 (24785)		EA	1				•	•	•	•	•	144	13
	XDHZZ		SETSCREW: ADJUSTING SCREW SP742 (24785)		EA	1									144	14
C	PAHZZ	5305-724-7212	SCREW, ADJUSTING SP795 (24785)		EA	1				•	•	•	•	•	144	15
C	PAHZZ	5310-006-2467	NUT, FULL PRESSURE: ADJUSTING SCREW SP280 (24785)		EA	1				•	•	•	•	•	144	16
C	XDHZZ		FOLLOWER, SPRING 10-02846-02 (24785)		EA	1									144	17
R	XDHZZ		SPRING, COUNTERBALANCE VALVE 10-00855-02 (24785)	A	EA	1									144	18
C	XDHZZ		SPRING, COUNTERBALANCE VALVE 10-01945-02 (24785)	BC	EA	1									144	18
	PAHZZ	4820-462-2156	SPOOL, ADJUSTING VALVE 10-02678-02 (24785)		EA	1				•	•	•	•	•	144	19
	PCHZZ	5330-640-9613	PACKING, PREFORMED: O RING, PIPE PLUG AN6227B7 (88044)		EA	1				•	•	•	•	•	144	20
	PAHZZ	4820-462-7795	PLUG, ORIFICE 10-06601-03 (24785)	AB	EA	1				•	•	•	•	•	144	21

(1) SMR CODE	(2) FEDERAL STOCK NUMBER	(3) DESCRIPTION REF NUMBER & MFR CODE	USABLE ON CODE	(4) UNIT OF MEAS	(5) QTY INC IN UNIT	(6) 30-DAY DS MAINT ALLOWANCE (a) 1-20	(b) 21-50	(c) 51-100	(7) 30-DAY GS MAINT ALLOWANCE (a) 1-20	(b) 21-50	(c) 51-100	(8) 1-YR ALW PER 100 EQUIP CNTGY	(9) DEPOT MAINT ALW PER 100 EQUIP	(10) ILLUSTRATION (a) FIG. NO.	(b) ITEM NO.
PAHZZ	4730-879-8366	PLUG, ORIFICE 10-22010-11 (24785)	C	EA	1	•	•	•	•	•	•	•	•	144	21
XAHZZ		BODY, VALVE 10-02057-02 (24785)		EA	1									144	22
PAHZZ	4730-142-1851	PLUG, PIPE: SOCKET HEAD SP1311 (24785)	BC	EA	1	•	•	•	•	•	•	•	•	144	
PAHZZ	5355-926-2334	KNOB, HAND 10-04438-08 (24785)	BC	EA	1	•	•	•	•	•	•	•	•	144	
		GROUP 78 - HAND PUMP, HYDRAULIC													
PAOHH	4320-115-8804	PUMP, HAND: HYDRAULIC RAMP 160-6 (47296)	B	EA	1	•	•	•	•	•	•	•	•	145	
XDHZZ		PIN: PUMP W/COTTER PIN 1000-13-0 (47296)	B	EA	3									145	1
XDOZZ		LEVER, HAND PUMP 1000-1-0 (47296)	B	EA	1									145	2
XDOZZ		HANDLE, PUMP 1000-2-0 (47296)	B	EA	1									145	3
PAOZZ	5340-888-8146	HAND GRIP: RUBBER DU1-50-6 (47296)	B	EA	1	•	•	•	•	•	•	•	•	145	4
XDOZZ		LINK, PUMP 1000-15S (47296)	B	EA	1									145	5
XDHZZ		SCREW, RELEASE 1000-5-0 (47296)	B	EA	1									145	6
XDHZZ		CAGE, RELEASE BALL 1000-4-0 (47296)	B	EA	1									145	7
PAHZZ	4320-803-1262	BALL, RELEASE 1000-18-0 (47296)	B	EA	1				•	•	•	•	•	145	8
PAHZZ	5330-620-9336	WASHER, SEAL: RELEASE SCREW 1000-6-0 (47296)	B	EA	2				•	•	•	•	•	145	9
XAHZZ		PISTON, PUMP 1000-14-6 (47296)	B	EA	1									145	10
XAHZZ		BARREL, PUMP 1000-9-6 (47296)	B	EA	1									145	11
PONZZ		PACKING, PREFORMED: PUMP PISTON 6227-11 (47296)	B	EA	2				•	•	•	•	•	145	12
PONZZ	5330-575-5352	PACKING, PREFORMED: BARREL 6227-14 (47296)	B	EA	1				•	•	•	•	•	145	13
PAHZZ	5330-831-6561	RING, REINFORCING: BARREL PACKING 6246-11 (47296)	B	EA	1				•	•	•	•	•	145	14
XDHZZ		BLOCK, PUMP VALVE 1000-24-0 (47296)	B	EA	1									145	15
PAHZZ	3110-100-6151	BALL, CHECK: 1/4 IN. MS19059-49 (96906)	B	EA	1				•	•	•	•	•	145	16
PAHZZ	3110-100-6149	BALL, VALVE, PUMP MS19059-47 (96906)	B	EA	1				•	•	•	•	•	145	17
PAHZZ	4320-077-0953	SPRING, VALVE 1000-23-0 (47296)	B	EA	1				•	•	•	•	•	145	18
XDHZZ		RING, RETAINING: VALVE SPRING 1000-22-0 (47296)	B	EA	1									145	19
PAHZZ	5310-620-8214	WASHER, SEAL: VALVE SPRING 1000-17-0 (47296)	B	EA	1				•	•	•	•	•	145	20
XAHZZ		BLOCK, PUMP 1000-3-0 (47296)	B	EA	1									145	21

	(1) SMR CODE	(2) FEDERAL STOCK NUMBER	(3) DESCRIPTION REF NUMBER & MFR CODE	USABLE ON CODE	(4) UNIT OF MEAS	(5) QTY INC IN UNIT	(6) 30-DAY DS MAINT ALLOWANCE (a) 1-20	(b) 21-50	(c) 51-100	(7) 30-DAY GS MAINT ALLOWANCE (a) 1-20	(b) 21-50	(c) 51-100	(8) 1-YR ALW PER 100 EQUIP CNTGY	(9) DEPOT MAINT ALW PER 100 EQUIP	(10) ILLUSTRATION (a) FIG. NO.	(b) ITEM NO.
N	PAOHH	4320-250-9586	PUMP, HAND, W/TANK 160-8 (47296)	C	EA	1	•	•	•	•	•	•	•	•	146	
N	PAOZZ	5340-888-8146	HAND GRIP, RUBBER DU1-50-6 (47296)	C	EA	1	•	•	•	•	•	•	•	•	146	1
N	PAOZZ	4320-805-0159	HANDLE 1000-2-0 (47296)	C	EA	1	•	•	•	•	•	•	•	•	146	2
N	PAHZZ	5315-614-3600	PIN, PUMP: W/COTTER PIN 1000-13-0 (47296)	C	EA	3				•	•	•	•	•	146	3
N	PAHZZ	4320-621-5249	LEVER 1000-1-0 (47296)	C	EA	1				•	•	•	•	•	146	4
N	PAOZZ	1730-871-7422	PLUG, FILL FP7 (47296)	C	EA	1	•	•	•	•	•	•	•	•	146	5
N	PCHZZ	5330-690-9594	PACKING, PREFORMED: FILL PLUG MS29561-210 (96906)	C	EA	1				•	•	•	•	•	146	6
N	PAHZZ	4320-833-3005	LINK, PUMP 1000-15L (47296)		EA	1				•	•	•	•	•	146	7
N	PAOZZ	4320-621-5248	SCREW, RELEASE 1000-5-0 (47296)	C	EA	1	•	•	•	•	•	•	•	•	146	8
N	XDHZZ		BLOCK ASSEMBLY 160-1-8 (47296)	C	EA	1									146	9
N	PAHZZ	4320-407-6648	RELEASE, BALL 1000-18-8 (47296)	C	EA	1				•	•	•	•	•	146	10
N	PAOZZ	5330-620-9336	WASHER, SEAL 1000-6-0 (47296)	C	EA	2	•	•	•	•	•	•	•	•	146	11
N	PAHZZ	4320-407-6650	CAGE, RELEASE BALL 1000-4-8 (47296)	C	EA	1				•	•	•	•	•	146	12
N	PAHZZ	4320-407-6646	PISTON, PUMP 1000-14-8 (47296)	C	EA	1				•	•	•	•	•	146	13
N	PAHZZ	4320-833-3004	BARREL, PUMP 1000-9-8 (47296)	C	EA	1				•	•	•	•	•	146	14
N	PCHZZ	5330-690-9594	PACKING, PREFORMED, O RING MS29561-210 (96906)	C	EA	1				•	•	•	•	•	146	15
N	PAHZZ	5365-482-1575	RING, REINFORCING 6246-15 (47296)	C	EA	1				•	•	•	•	•	146	16
N	PCHZZ	5330-828-3563	PACKING, PREFORMED 1000-25-8 (47296)	C	EA	1				•	•	•	•	•	146	17
N	PAHZZ	3110-100-6151	CHECK, BALL MS19059-49 (96906)	C	EA	1				•	•	•	•	•	146	18
N	PAHZZ	3110-100-6149	BALL, VALVE PUMP MS19059-47 (96906)	C	EA	1				•	•	•	•	•	146	19
N	PAHZZ	4320-077-0953	SPRING, VALVE 1000-23-0 (47296)	C	EA	1				•	•	•	•	•	146	20
N	PAHZZ	5365-480-6179	RING, SNAP 1000-22-0 (47296)	C	EA	1				•	•	•	•	•	146	21
N	PAHZZ	5310-770-2489	WASHER, SEAL 1000-17-8 (47296)	C	EA	1				•	•	•	•	•	146	22
N	PAHZZ	4820-833-3007	VALVE, BLOCK PUMP 1000-24-8 (47296)	C	EA	1				•	•	•	•	•	146	23
			GROUP 79 - TANK, HYDRAULIC OIL WINCH													
	XDFZZ		TANK, HYDRAULIC OIL SUPPLY, RAMP WINCH H0131 (09608) (COMPONENTS SAME AS TANK, P/N H0103 (09608))	A	EA	2									147	1

(1) SMR CODE	(2) FEDERAL STOCK NUMBER	(3) DESCRIPTION REF NUMBER & MFR CODE	USABLE ON CODE	(4) UNIT OF MEAS	(5) QTY INC IN UNIT	(6) 30-DAY DS MAINT ALLOWANCE (a) 1-20	(b) 21-50	(c) 51-100	(7) 30-DAY GS MAINT ALLOWANCE (a) 1-20	(b) 21-50	(c) 51-100	(8) 1-YR ALW PER 100 EQUIP CNTGY	(9) DEPOT MAINT ALW PER 100 EQUIP	(10) ILLUSTRATION (a) FIG. NO.	(b) ITEM NO.
XDFZZ		TANK, OIL, 3 GALLON: HYDRAULIC OIL EXPANSION TANK H0103 (09608)	A	EA	1									147	1
XDOZZ		CAP, FILL AND VENT: HYDRAULIC OIL TANK H0117 (09608)	A	EA	2									147	2
XDOZZ		GAGE, SIGHT: HYDRAULIC OIL TANK H0144 (09608)	A	EA	2									147	3
		GROUP 80 - CYLINDERS, HYDRAULIC RAMP LATCH													
N PAOZZ	5310-734-1739	NUT, HEXAGON: U-BOLT, 1-12 THD SIZE MS51972-10 (96906)	C	EA	8	•	•	•	•	•	•	•	•	148	1
N XDHZZ		BOLT, U: RAMP LATCH 145-451095841 (80064)	C	EA	2									148	2
N PAOZZ	4730-172-0040	FITTING, LUBRICATION: RAMP LATCH MS15004-1 (96906)	C	EA	2	•	•	•	•	•	•	•	•	148	3
N PAOZZ	5315-832-1840	PIN, CYLINDER CLEVIS 8658-11 (91940)	C	EA	2	•	•	•	•	•	•	•	•	148	4
N PAFZZ	5340-922-3113	CLEVIS, HYDRAULIC CYLINDER 82262 (91940)	C	EA	2	•	•	•	•	•	•	•	•	148	5
N PAFZZ	5315-832-1841	PIN, RAMP LATCH 8658-15 (91940)	C	EA	2	•	•	•	•	•	•	•	•	148	6
N PAFZZ	5340-229-9090	LATCH, RAMP 145-451095842 (80064)	C	EA	2	•	•	•	•	•	•	•	•	148	7
N PAFZZ	5340-251-0085	CLEVIS, RAMP LATCH 82266 (91940)	C	EA	2	•	•	•	•	•	•	•	•	148	8
N XDOZZ		BLOCK, PILLOW: CYLINDER 145-451095845 (80064)	C	EA	4									148	9
N PAFZZ	3120-288-2459	BUSHING, LATCH M2832-20 (71041)	C	EA	2	•	•	•	•	•	•	•	•		
N PAOZZ	3120-287-8004	BUSHING, PILLOW BLOCK FF1202-3 (19121)	C	EA	4	•	•	•	•	•	•	•	•		
N PAOZZ	9525-007-6385	BOLT, LATCH, CLEVIS QQS763 (81348)	C	EA	2	•	•	•	•	•	•	•	•		
N PAOZZ	5310-926-5875	WASHER, LOCK: 1 1/2 IN. MS35338-152 (96906)	C	EA	2	•	•	•	•	•	•	•	•		
N PAOZZ	5305-727-6804	SCREW, CAP, HEXAGON HEAD: PILLOW BLOCK MTG, 1/2-13 THD SIZE, 1 3/4 IN. LG MS90728-414 (96906)	C	EA	8	•	•	•	•	•	•	•	•		
N PAOZZ	5310-989-5985	NUT, PLAIN, HEXAGON: PILLOW BLOCK MTG, 1/2-13 THD SIZE MS35691-35 (96906)	C	EA	20	•	•	•	•	•	•	•	•		
N PAOZZ	5310-767-9425	WASHER, LOCK: PILLOW BLOCK MTG, 1/2 IN. SCREW SIZE MS15795-818 (96906)	C	EA	20	•	•	•	•	•	•	•	•		
N PAOZZ	5305-021-3806	BOLT: 1/2-13 X 1 1/2 IN. LG MS35307-113 (96906)	C	EA	12	•	•	•	•	•	•	•	•		
N PAFFF	2040-229-8969	CYLINDER, HYDRAULIC 11-2L1K10X1-2 (50465)	C	EA	2	•	•	•	•	•	•	•	•	149	1
N PAFZZ	5310-003-6920	NUT, TIE BOLT: 1/4-28 THD SIZE 50-00031-006 (50465)	C	EA	4	•	•	•	•	•	•	•	•	149	2
N PAFZZ		BOLT, MACHINE: RETAINER MTG, 1/4-28 THD SIZE, 1/2 IN. LG 50-00029-086 (50465)	C	EA	4	•	•	•	•	•	•	•	•	149	3

(1)	(2)	(3)		(4)	(5)	(6)			(7)			(8)	(9)	(10)	
		DESCRIPTION				30-DAY DS MAINT ALLOWANCE			30-DAY GS MAINT ALLOWANCE					ILLUSTRATION	
SMR CODE	FEDERAL STOCK NUMBER	REF NUMBER & MFR CODE	USABLE ON CODE	UNIT OF MEAS	QTY INC IN UNIT	(a) 1-20	(b) 21-50	(c) 51-100	(a) 1-20	(b) 21-50	(c) 51-100	1-YR ALW PER 100 EQUIP CNTGY	DEPOT MAINT ALW PER 100 EQUIP	(a) FIG. NO.	(b) ITEM NO.
N PAFZZ	2040-229-9001	PLATE, RETAINER 15-07165-001 (50465)	C	EA	1	•	•	•	•	•	•	•	•	149	4
N PAFZZ		BUSHING, ROD 15-07028-001 (50465)	C	EA	1	•	•	•	•	•	•	•	•	149	5
N PAFZZ	2040-229-9002	WIDER ROD 50-00015-003 (50465)	C	EA	1	•	•	•	•	•	•	•	•	149	6
N PCFZZ	5330-926-0121	SEAL BUSHING: OD 50-00001-024 (50465)	C	EA	1	•	•	•	•	•	•	•	•	149	7
N PCFZZ	5330-982-0562	SEAL ROD 50-00006-049 (50465)	C	EA	1	•	•	•	•	•	•	•	•	149	8
N XDFZZ		BOLTS, TIE 15-07158-02 (50465)	C	EA	4									149	9
N XAFZZ		HEAD, ROD END 15-07141-001 (50465)	C	EA	1									149	10
N PCFZZ	5330-003-0642	SEAL, BARREL 50-00001-029 (50465)	C	EA	2	•	•	•	•	•	•	•	•	149	11
N XAFZZ		HEAD, BLIND END 15-07151-001 (50465)	C	EA	1									149	12
N PAFZZ	5310-003-6921	NUT, PISTON 50-00033-022 (50465)	C	EA	1	•	•	•	•	•	•	•	•	149	13
N PCFZZ	5330-982-0660	SEAL, PISTON, O 50-00007-019 (50465)	C	EA	1	•	•	•	•	•	•	•	•	149	14
N PAFZZ	2040-229-8992	PISTON 15-07156-001 (50465)	C	EA	1	•	•	•	•	•	•	•	•	149	15
N PCFZZ	5330-923-5916	SEAL, PISTON: ID 50-00001-013 (50465)	C	EA	1	•	•	•	•	•	•	•	•	149	16
N PAFZZ	2040-229-9000	ROD, PISTON 20-07475-02 (50465)	C	EA	1	•	•	•	•	•	•	•	•	149	17
N XAFZZ		BARREL 15-07155-005 (50465)	C	EA	1									149	18
N PAFZZ		RETAINER, SPRING: STOP TUBE SPL10-07117-001 (50465)	C	EA	1	•	•	•	•	•	•	•	•		
N PAFZZ	5360-869-5133	SPRING SPL50-00070-001 (50465)	C	EA	1	•	•	•	•	•	•	•	•		
		GROUP 81 - PROPELLER SHAFT													
N PAOZZ	5315-243-1167	PIN, COTTER: PROPELLER SHAFT NUT, 1/4 IN. DIA, 2 1/4 IN. LG MS24665-643 (96906)	C	EA	4	•	•	•	•	•	•	•	•	150	1
PAOZZ	5315-889-2702	PIN, COTTER: PROPELLER SHAFT NUT MS24665-656 (96906)	AB	EA	4	•	•	•	•	•	•	•	•	150	1
PAOZZ	5310-438-3691	NUT, HEXAGON, JAM: PROPELLER MHCA248 (98042)		EA	2	•	•	•	•	•	•	•	•	150	2
PAOZZ	5310-438-3690	NUT, PLAIN, HEXAGON: PROPELLER SHAFT MHCA249 (98042)		EA	2	•	•	•	•	•	•	•	•	150	3
PAOHH	2010-540-7690	PROPELLER, SHIP: RH SEAGULLTYPE1RH (72201)		EA	1	•	•	•	•	•	•	•	•	150	4
PAOHH	2010-540-7689	PROPELLER, SHIP: LH SEAGULLTYPE1LH (72201)		EA	1	•	•	•	•	•	•	•	•	150	4
C PAOZZ	4730-197-1595	CLAMP, HOSE: STUFFING BOX, 4 IN. R1441 (79645)		EA	2	•	•	•	•	•	•	•	•	150	5
C MOOZZ		HOSE, FLEXIBLE RUBBER: PROPELLER SHAFT MHCA247 (98042) MANUFACTURE FROM:	AB	EA	2									150	6
C POOZZ	4720-595-1820	HOSE, AS REQUIRED		FT		•	•	•	•	•	•			150	

(1) SMR CODE	(2) FEDERAL STOCK NUMBER	(3) DESCRIPTION — REF NUMBER & MFR CODE	USABLE ON CODE	(4) UNIT OF MEAS	(5) QTY INC IN UNIT	(6) 30-DAY DS MAINT ALLOWANCE (a) 1-20	(b) 21-30	(c) 31-100	(7) 30-DAY GS MAINT ALLOWANCE (a) 1-20	(b) 21-30	(c) 31-100	(8) 1-YR ALW PER 100 EQUIP CNTGY	(9) DEPOT MAINT ALW PER 100 EQUIP	(10) ILLUSTRATION (a) FIG. NO.	(b) ITEM NO.
H	MOOZZ	HOSE, FLEXIBLE RUBBER: STUFFING BOX 245-4510951IN7 (80064) MANUFACTURE FROM:	C	EA	2									150	6
H	PCOZZ 4720-288-9761	HOSE, 6 1/2 IN. REQUIRED FOR EA HOSE		FT		•	•	•	•	•	•			150	
	PAOZZ 5310-438-3693	NUT, PLAIN, HEXAGON: SHAFT COUPLING MHCA2-18 (98042)		EA	24	•	•	•	•	•	•	•	•	150	7
	PAOZZ 5306-437-4475	BOLT, MACHINE: SHAFT COUPLING MHCA2-17 (98042)		EA	24	•	•	•	•	•	•	•	•	150	8
	PAOZZ 2815-389-6060	COUPLING, SHAFT PROPELLER 5173268 (72582)		EA	2	•	•	•	•	•	•	•	•	150	9
	MOOZZ	KEY, MACHINE: PROPELLER, BRONZE MHCA2M4 (98042) MANUFACTURE FROM:		EA	2									150	10
	PAOZZ 9530-233-1289	BAR, BRONZE, 5/8 IN. SQUARE, 6 3/32 IN. REQUIRED FOR EA KEY		EA		•	•	•	•	•	•			150	
R	PANZZ 2040-705-9249	STUFFING BOX, BRONZE FIG181 (72201)		EA	2				•	•	•	•	•	150	11
	MOOZZ	PACKING, FLAX: 3/8 IN. SQUARE MHCA2M14 (98042) MANUFACTURE FROM:	AB	EA	2									150	12
	PCOZZ 5330-186-8039	PACKING, AS REQUIRED		FT		•	•	•	•	•	•			150	
H	MOOZZ	PACKING, SHAFT, STUFFING BOX: 7/16 IN. SQUARE JMC175 (75165) MANUFACTURE FROM:	C	EA	2									150	12
H	PCOZZ 5330-196-5060	PACKING, FLAX, 7/16 IN. SQUARE, 9 IN. REQUIRED FOR EA PACKING		FT		•	•	•	•	•	•			150	
	PAOHH 2010-127-4796	SHAFT, PROPELLER: SHIP, BRONZE MHCA2M3 (98042)		EA	2	•	•	•	•	•	•	•	•	150	13
	PCOZZ 2010-076-3737	BEARING: STRUT SHAFT, RUBBER NATIVE (76528)		EA	2	•	•	•	•	•	•	•	•	150	14
C	PAFZZ 5340-134-8131	PLATE, CORROSION PREVENTIVE A18001CLIZHS (84507)		EA	7	•	•	•	•	•	•	•	•	150	15
H	PANZZ 5310-764-6609	NUT, STUFFING BOX: STRAP, 5/8-11 THD SIZE MS51971-7 (96906)	C	EA	4				•	•	•	•	•	151	1
H	PANZZ 5305-721-5322	BOLT, MACHINE: MTG PLATE BRACE, 5/8-11 THD SIZE, 1 1/2 IN. LG MS35307-462 (96906)	C	EA	4				•	•	•	•	•	151	2
H	MOOZZ	PLATE MOUNTING, STUFFING BOX STUD: 1/4 IN. 245-4510951IN18 (80064) MANUFACTURE FROM:	C	EA	2									151	3
H	PANZZ 9515-034-1432	PLATE, STEEL, 1/4 IN., AS REQUIRED QQS698 (81348)		PL					•	•	•			151	
H	BRAZZ	BRACE, PACKING, STUFFING BOX, 1/4 IN. 245-4510951IN19 (80064) MANUFACTURE FROM:	C	EA	4									151	4
H	PANZZ 9515-034-1432	BAR, STEEL, 1/4 X 1 1/2 IN., AS REQUIRED QQS698 (81348)	C	FT					•	•	•			151	4
H	MOOZZ	SLEEVE, MONEL 245-2410951IN15 (80064) MANUFACTURE FROM:	C	EA	2										
H	PAOZZ 4710-873-2254	TUBE, K MONEL, 2 7/8 IN OD, 7/16 WALL THK, 6 FT REQUIRED FOR EA SLEEVE 57ONEL27-800 (74900)		EA		•	•	•	•	•	•				

(1) SMR CODE	(2) FEDERAL STOCK NUMBER	(3) DESCRIPTION REF NUMBER & MFR CODE	USABLE ON CODE	(4) UNIT OF MEAS	(5) QTY INC IN UNIT	(6) 30-DAY DS MAINT ALLOWANCE (a) 1-20	(b) 21-50	(c) 51-100	(7) 30-DAY GS MAINT ALLOWANCE (a) 1-20	(b) 21-50	(c) 51-100	(8) 1-YR ALW PER 100 EQUIP CNTGY	(9) DEPOT MAINT ALW PER 100 EQUIP	(10) ILLUSTRATION (a) FIG. NO.	(b) ITEM NO.
PAOZZ		SCREW, CAP, HEXAGON HEAD: STRUT BEARING, 1/2-13 THD SIZE, 1 3/4 IN. LG 7420-221 (26571)	AB	EA	16	•	•	•	•	•	•	•	•		
PAOZZ	5310-438-3689	NUT, HEXAGON, SPECIAL: COUPLING, BRASS MMCA2M16 (98042)		EA	2	•	•	•	•	•	•	•	•		
PAOZZ		WASHER, LOCK: STRUT BEARING, 1/2 IN. SCREW SIZE 7421-221 (26571)	AB	EA	8	•	•	•	•	•	•	•	•		
PAOZZ	5305-226-9226	SCREW, CAP, HEXAGON HEAD: PROPELLER SHAFT BEARING, 3/4-10 THD SIZE, 4 IN. LG MS35311-195 (96906)		EA	16	•	•	•	•	•	•	•	•		
		GROUP 82 - INDICATOR, RUDDER, ANGLE AND TRANSMITTER													
PAOZZ	6320-115-8800	INDICATOR, RUDDER: ANGLE INDICATOR MODEL24V (01162)	A	EA	1	•	•	•	•	•	•	•	•	152	
XDOZZ		STUD, LEVER ARM RA12 (01162)	A	EA	1									152	1
XDOZZ		LEVER, ARM RA11 (01162)	A	EA	1									152	2
C PAOZZ	5310-819-2985	NUT, PLAIN, HEXAGON: TERMINAL MS35650-106 (96906)	A	EA	4	•	•	•	•	•	•	•	•	152	3
PAOZZ	5310-264-1390	WASHER, FLAT: TERMINAL MS45901-4 (96906)	A	EA	4	•	•	•	•	•	•	•	•	152	4
PAOZZ	5305-206-2511	SCREW, MACHINE: TERMINAL MS35215-57 (96906)	A	EA	1	•	•	•	•	•	•	•	•	152	5
PAOZZ	5305-954-8152	SCREW, MACHINE: TERMINAL MS35215-59 (96906)	A	EA	1	•	•	•	•	•	•	•	•	152	6
PAOZZ		RESISTOR, INDICATOR RA20 (01162)	A	EA	1	•	•	•	•	•	•	•	•	152	7
PAOZZ	6320-779-5923	RECEIVER RUDDER: ANGLE INDICATOR RA1 (01162)	A	EA	1	•	•	•	•	•	•	•	•	152	8
PAOZZ	5305-059-8382	SCREW, MACHINE: ARM MTG MS35215-52 (96906)	A	EA	2	•	•	•	•	•	•	•	•	152	9
XDOZZ		ARM, RUDDER RA6 (01162)	A	EA	1									152	10
PAOZZ	5305-954-8154	SCREW, MACHINE: SENDING UNIT MTG MS35215-61 (96906)	A	EA	2	•	•	•	•	•	•	•	•	152	11
PAOZZ	6320-779-5924	SENDING UNIT, RUDDER ANGLE RA2 (01162)	A	EA	1	•	•	•	•	•	•	•	•	152	12
PAOZZ	6320-115-8799	INDICATOR, RUDDER ANGLE MK2 (72201)	BC	EA	1	•	•	•	•	•	•	•	•	153	
XAOZZ		TUBE, STUFFING 31-5 (72201)	BC	EA	1									153	1
PAOZZ		CABLE AND WIRE 31-15 (72201)	BC	EA	1	•	•	•	•	•	•	•	•	153	2
PAOZZ	6320-115-8798	JOINT, BALL W/WASHER AND NUT 31-3 (72201)	BC	EA	1	•	•	•	•	•	•	•	•	153	3
XAOZZ		ARM RUDDER, ANGLE INDICATOR 31-4 (72201)	BC	EA	1									153	4
XAOZZ		COLLAR, W/SETSCREW 31-7 (72201)	BC	EA	1									153	5
PAOZZ	6320-115-8797	BEARING, LONG 31-8 (72201)	BC	EA	1	•	•	•	•	•	•	•	•	153	6

(1) SMR CODE	(2) FEDERAL STOCK NUMBER	(3) DESCRIPTION REF NUMBER & MFR CODE	USABLE ON CODE	(4) UNIT OF MEAS	(5) QTY INC IN UNIT	(6) 30-DAY DS MAINT ALLOWANCE (a) 1-20	(b) 21-50	(c) 51-100	(7) 30-DAY GS MAINT ALLOWANCE (a) 1-20	(b) 21-50	(c) 51-100	(8) 1-YR ALW PER 100 EQUIP CNTGY	(9) DEPOT MAINT ALW PER 100 EQUIP	(10) ILLUSTRATION (a) FIG. NO.	(b) ITEM NO.
PAOZZ	5305-005-0838	SCREW, MACHINE: COVER MTG 31-14 (72201)	BC	EA	8	•	•	•	•	•	•	•	•	153	7
C XAOZZ		COVER, TRANSMITTER 31-2 (72201)	BC	EA	1									153	8
PCOZZ	5330-458-2058	GASKET: TRANSMITTER 31-13 (72201)	BC	EA	1	•	•	•	•	•	•	•	•	153	9
C XDOZZ		BRACKET 31-12 (72201)	BC	EA	1									153	10
C XAOZZ		GEAR, SMALL, W/SETSCREW 31-11 (72201)	BC	EA	1									153	11
C XAOZZ		GEAR, LARGE, W/SETSCREW 31-10 (72201)	BC	EA	1									153	12
PAOZZ	6320-115-8796	BEARING, SHORT 31-9 (72201)	BC	EA	1	•	•	•	•	•	•	•	•	153	13
PAOZZ	5905-221-8094	POTENTIOMETER, TRANSMITTER 31-1 (72201)	BC	EA	1	•	•	•	•	•	•	•	•	153	14
C XAOZZ		SHAFT 31-6 (72201)	BC	EA	1									153	15
C XAOZZ		CASE, TRANSMITTER 31-16 (72201)	BC	EA	1									153	16
C XAOZZ		COVER, BATTERY BOX 31-22 (72201)	BC	EA	1									153	17
PCOZZ	5330-458-2221	GASKET: BATTERY BOX 31-23 (72201)	BC	EA	1	•	•	•	•	•	•	•	•	153	18
XAOZZ		CLIP, BATTERY 31-19 (72201)	BC	EA	1									153	19
PCOZZ	6135-120-1020	BATTERY: SIZE D FLASHLIGHT MS75059 (96906)	BC	EA	1	•	•	•	•	•	•	•	•	153	20
XAOZZ		STRIP, TERMINAL 31-20 (72201)	BC	EA	1									153	21
PAOZZ	5905-221-8095	POTENTIOMETER, BATTERY GAIN 31-17 (72201)	BC	EA	1	•	•	•	•	•	•	•	•	153	22
PCOZZ	5325-461-5886	GROMMET, RUBBER 31-21 (72201)	BC	EA	2	•	•	•	•	•	•	•	•	153	23
C XAOZZ		CASE, BATTERY BOX 31-18 (72201)	BC	EA	1									153	24
PAOZZ	6320-115-8795	METER: 3 IN. SCALE 31-25 (72201)	BC	EA	1	•	•	•	•	•	•	•	•	153	25
PAOZZ	5905-221-8096	RESISTOR, FIXED: 1200 OHMS 31-26 (72201)	BC	EA	2	•	•	•	•	•	•	•	•		
		GROUP 83 - RUDDER													
MOOZZ		GASKET: NEOPRENE, 1/8 IN. THK MHC5941 (98042) MANUFACTURE FROM:	AB	EA	2									154	1
PCOZZ	5330-261-5761	GASKET, AS REQUIRED		YD		•	•	•	•	•	•			154	
C PAHZZ	5310-763-8901	NUT, PLAIN, HEXAGON: FLANGE MTG, 3/4-16 THD SIZE MS51968-23 (96906)	AB	EA	8				•	•	•	•	•	154	2
C PAHZZ	5310-193-7481	WASHER, LOCK: FLANGE MTG, 3/4 IN. SCREW SIZE 1232-3 (78189)	AB	EA	8				•	•	•	•	•	154	3
PAHZZ	5305-727-8821	SCREW, CAP, HEXAGON HEAD: FLANGE MTG, 3/4-16 THD SIZE, 3 1/4 IN. LG MS90726-192 (96906)	AB	EA	8				•	•	•	•	•	154	4

(1) SMR CODE	(2) FEDERAL STOCK NUMBER	(3) DESCRIPTION — REF NUMBER & MFR CODE	USABLE ON CODE	(4) UNIT OF MEAS	(5) QTY INC IN UNIT	(6) 30-DAY DS MAINT ALLOWANCE (a) 1-30	(b) 21-50	(c) 51-100	(7) 30-DAY GS MAINT ALLOWANCE (a) 1-30	(b) 21-50	(c) 51-100	(8) 1-YR ALW PER 100 EQUIP CNTGY	(9) DEPOT MAINT ALW PER 100 EQUIP	(10) ILLUSTRATION (a) FIG. NO.	(b) ITEM NO.
C PAHZZ	5310-189-8471	NUT, JAM: PACKING GLAND MTG, 5/8-11 THD SIZE, BRONZE MIL8857TYPE4STYLEAORB (81349)	AB	EA	8				•	•	•	•	•	154	5
C PAHZZ	5310-913-5475	NUT, PLAIN, HEXAGON: PACKING GLAND MTG, 5/8-11 THD SIZE, BRONZE MS51969-7 (96906)		EA	8				•	•	•	•	•	154	6
XDHZZ		GLAND, PACKING: RUDDER STUFFING MHCA5M11 (98042)	A	EA	2									154	7
C PAHZZ	5305-771-9383	STUD, PLAIN: PACKING GLAND MTG, BRONZE, 5/8-11 THD SIZE, 4 1/2 IN. LG 445-4510939M14 (80064)		EA	8				•	•	•	•	•	154	8
C PAHZZ	5310-901-6836	NUT, PLAIN, HEXAGON: STUFFING BOX MTG, 3/4-16 THD SIZE, BRONZE MS51972-8 (96906)		EA	8				•	•	•	•	•	154	9
PAHZZ	5305-728-0214	SCREW, CAP, HEXAGON HEAD: STUFFING BOX MTG, 3/4-16 THD SIZE, 3 IN. LG M90726-191 (96906)	AB	EA	8				•	•	•	•	•	154	10
N PAHZZ	5305-949-9194	SCREW, CAP, HEXAGON HEAD: STUFFING BOX, 3/4-16 THD SIZE, 3 1/2 IN. LG MS35308-493 (96906)	C	EA	8				•	•	•	•	•	154	10
MFFZZ		GASKET: STUFFING BOX MTG, 1/16 IN. THK, NEOPRENE MHCA5M23 (98042) MANUFACTURE FROM:	AB	EA	1									154	11
PCFZZ	5330-261-5760	NEOPRENE, AS REQUIRED		YD		•	•	•	•	•	•			154	
N MFFZZ		GASKET, RUDDER, PORT FLANGE 445-4510939M23 (80064) MANUFACTURE FROM:	C	EA	1									154	11
N PCFZZ	8305-170-5382	CANVAS, NO. 6, AS REQUIRED CCCC419TYPE1 (81348)		FT		•	•	•	•	•	•	•	•	154	
XDHZZ		STUFFING BOX, RUDDER MHCA5M10 (98042)	A	EA	2									154	12
N XDHZZ		STUFFING BOX ASSEMBLY: RUDDER 445-4510939M10N11M14M15M16 (80064)	BC	EA	2									154	12
MOOZZ		PACKING, FLAX: 1/4 IN. SQUARE MHCA5-12 (98042) MANUFACTURE FROM:	A	EA	1									154	13
PAFZZ	5330-543-3205	PACKING, AS REQUIRED		FT		•	•	•	•	•	•			154	
N MFFZZ		PACKING, RUDDER: STUFFING BOX, 1/4 IN. SQUARE 445-4510939M12 (80064) MANUFACTURE FROM:	BC	EA	1									154	13
N PAFZZ	5330-196-5060	PACKING, FLAX, 1/2 IN. SQUARE 10 FT REQUIRED MHP106 (81348)		FT		•	•	•	•	•	•			154	
C PAHZZ	5310-619-5813	NUT, PLAIN, HEXAGON: UPPER RUDDER STOCK, 1 1/8-7 THD SIZE FFN836GROUPTYPE3STYLE1GRADEA (81348)		EA	8				•	•	•	•	•	154	14
C PAHZZ	5310-850-1611	WASHER, LOCK: UPPER RUDDER STOCK, 1 1/8 IN. SCREW SIZE MS35338-54 (96906)		EA	8				•	•	•	•	•	154	15
C PAHZZ		SCREW, CAP, HEXAGON HEAD: UPPER RUDDER STOCK, 1 1/8-7 THD SIZE, 3 1/2 IN. LG MS35307-556 (96906)		EA	8				•	•	•	•	•	154	16
PAHZZ	2040-115-3709	STOCK, RUDDER, UPPER MHCA5M4P3 (98042)		EA	2				•	•	•	•	•	154	17
PAHZZ	2040-115-3707	BEARING, SLEEVE, RUDDER 9872-356 (52660)		EA	2				•	•	•	•	•	154	18

(1) SMR CODE	(2) FEDERAL STOCK NUMBER	(3) DESCRIPTION — REF NUMBER & MFR CODE	USABLE ON CODE	(4) UNIT OF MEAS	(5) QTY INC IN UNIT	(6) 30-DAY DS MAINT ALLOWANCE (a) 1-20	(b) 21-50	(c) 51-100	(7) 30-DAY GS MAINT ALLOWANCE (a) 1-20	(b) 21-50	(c) 51-100	(8) 1-YR ALW PER 100 EQUIP CNTGY	(9) DEPOT MAINT ALW PER 100 EQUIP	(10) ILLUSTRATION (a) FIG. NO.	(b) ITEM NO.
C PAHZZ	5315-291-7216	PIN, COTTER: RUDDER STOCK NUT, 1/4 IN. DIA, 3 1/2 IN. LG MS24665-644 (96906)		EA	2				•	•	•	•	•	154	19
PAHZZ		NUT, PLAIN, HEXAGON: RUDDER STOCK, 2-16 THD SIZE MHCA5427 (98042)	A	EA	2				•	•	•	•	•	154	20
H PAFZZ	5310-770-0058	CASTLE, NUT, HEXAGON: RUDDER STOCK UP, 2-12 THD SIZE 445-4510939M27 (80064)	BC	EA	2	•	•	•	•	•	•	•	•	154	20
C XBHZZ	9515-770-6217	FLANGE, THRUST, UPPER 445-4510939M25 (80064)		EA	2									154	21
C XBHZZ	9515-770-6216	FLANGE, THRUST, LOWER 445-4510939M24 (80064)		EA	2									154	22
PAHZZ	3120-463-5582	BEARING, THRUST, LOWER MHCA5-26 (98042)		EA	2				•	•	•	•	•	154	23
XBHZZ		STOCK, RUDDER: UPPER MHCA5448 (98042)	AB	EA	2									154	24
PAHZZ	3120-463-5581	BEARING, RUDDER: BRONZE, 3 1/2 IN. OD, 2 1/2 IN. ID, 2 1/4 IN. LG MHCA5435 (98042)		EA	2				•	•	•	•	•	154	25
PAHZZ	2040-115-3708	RUDDER MHCA5424243P1P2 (98042)		EA	2				•	•	•	•	•	154	26
H MHHZZ		GASKET, EMERGENCY, STEERING PLUG 445-4510939M1 (80064) MANUFACTURE FROM:	C	EA	2									155	1
H PCHZZ	8305-170-5385	CANVAS, NO. 6, AS REQUIRED CCCC419TYPEI (81348)		FT					•	•	•			155	
H PAHZZ	5305-727-8822	BOLT, MACHINE: THRUST BEARING FLANGE MS90726-193 (96906)	C	EA	8				•	•	•	•	•	155	2
H PAOZZ	4730-049-8126	FITTING, LUBRICATION: RUDDER THRUST BEARING, 30 DEG, 1/8-27 THD SIZE 1988 (70270)	C	EA	4	•	•	•	•	•	•	•	•	155	3
H PAHZZ	5310-764-6609	NUT, PLAIN, HEXAGON: CRANK BOLT, 5/8-11 THD SIZE MS51971-7 (96906)	C	EA	8				•	•	•	•	•	155	4
H PAHZZ	5310-937-0453	WASHER, LOCK: CRANK, BOLT NUT, 5/8 IN. SCREW SIZE MS35338-145 (96906)	C	EA	8				•	•	•	•	•	155	5
H PAHZZ	5305-923-8268	BOLT, MACHINE: CRANK, 5/8-11 THD SIZE, 2 1/2 IN. LG MS35307-466 (96906)	C	EA	8				•	•	•	•	•	155	6
H PAHZZ		CRANK ASSEMBLY: RUDDER SHAFT 445-4510939M38THRUM43 (18072)	C	EA	2				•	•	•	•	•	155	7
H MHHZZ		FLANGE, RUDDER, PORT 445-4510939P4 (80064) MANUFACTURE FROM:	C	EA	2										
H PAHZZ	9515-034-1452	PLATE, 45 PT, 9 LB, STEEL, AS REQUIRED QQS698 (81348)		PL					•	•	•				
PAHZZ	5310-255-0108	NUT, HEXAGON, SLOTTED: RUDDER SHOE, 7/8-9 THD SIZE AN121560 (88044)		EA	4				•	•	•	•	•		
PAHZZ	5315-243-1170	PIN, COTTER: RUDDER SHOE MS24665-516 (96906)		EA	4				•	•	•	•	•		
PAHZZ	5305-948-0956	SCREW, CAP, HEXAGON HEAD: RUDDER SHOE, 7/8-9 THD SIZE, 4 1/2 IN. LG MS90725-219 (96906)		EA	4				•	•	•	•	•		

	(1) SMR CODE	(2) FEDERAL STOCK NUMBER	(3) DESCRIPTION REF NUMBER & MFR CODE	USABLE ON CODE	(4) UNIT OF MEAS	(5) QTY INC IN UNIT	(6) 30-DAY DS MAINT ALLOWANCE (a) 1-20	(b) 21-50	(c) 51-100	(7) 30-DAY GS MAINT ALLOWANCE (a) 1-20	(b) 21-50	(c) 51-100	(8) 1-YR ALW PER 100 EQUIP CNTGY	(9) DEPOT MAINT ALW PER 100 EQUIP	(10) ILLUSTRATION (a) FIG. NO.	(b) ITEM NO.
	MMMZZ		WIRE: 051, STAINLESS, TY304, SCREW LOCKING MMC17M18 (98042) MANUFACTURE FROM:		EA	1										
	PAMZZ	9505-186-9132	WIRE, AS REQUIRED		CL					•	•	•				
	XDOZZ		TILLER, EMERGENCY MMC35F3M31 (98042)	AB	EA	1										
N	PAMZZ	5310-655-9908	NUT, PLAIN, HEXAGON: NO. 10-24 THD SIZE 452-25 (05258)	C	EA	12				•	•	•	•	•		
N	MMMZZ		RUDDER, PORT 445-4510939F1 (80064) MANUFACTURE FROM:	C	EA	2										
N	PAMZZ	4710-042-3812	PIPE, 2 3/4 IN. ID, 4 IN. OD, AS REQUIRED WWP404 (81348)		FT					•	•	•				
N	MMMZZ		KEY, RUDDER, CRANK 445-4510939M30 (80064) MANUFACTURE FROM:	C	EA	2										
N	PAMZZ	9510-541-9527	BAR, 5/8 IN. SQUARE, STEEL, 3 IN. REQUIRED FOR EA KEY QQTS80GRADECCLASSW2-090RM2-10 (81348)		EA					•	•	•				
N	PAMZZ	5305-701-5118	SCREW, MACHINE: EMERGENCY STEERING DECK PLATE FLANGE, NO. 10-24 THD SIZE, 1 IN. LG MS51959-67 (96906)	C	EA	12				•	•	•	•	•		
N	PAOZZ	4730-172-0049	FITTING, LUBRICATION: RUDDER PORT BEARING, 1/8-27 THD SIZE MS15006-1 (96906)	C	EA	2	•	•	•	•	•	•	•	•		
N	MMMZZ		ROD, TIE: RUDDER, CRANK 445-4510939M36 (80064) MANUFACTURE FROM:	BC	EA	1										
N	PAMZZ	9520-027-0882	ROD, 1 1/2 IN. DIA, STEEL, A36, 11 1/2 IN. REQUIRED QQS741 (81348)		FT					•	•	•				
N	MMMZZ		ROD, TIE: CLEVIS 445-4510939M37 (80064) MANUFACTURE FROM:	BC	EA	2										
N	PAMZZ	9520-027-0882	BAR, 2 1/2 IN. SQUARE, STEEL, 6 1/2 IN. REQUIRED FOR EA ROD QQS741 (81348)		FT					•	•	•				
N	PAMZZ	2040-273-0677	FLANGE, DECK 5324 (79577)	C	EA	2				•	•	•	•	•		
N	PAOZZ	4730-231-2428	CAP, PIPE: TILLER ARM, 1 1/2 IN. WWP521 (81348)	C	EA	1	•	•	•	•	•	•	•	•		
			GROUP 84 - HULL													
N	XDOZZ		PILOT HOUSE CANOPY, COMPLETE 145-4510955-1-3-5 (80064)	C	EA	1									156	
N	PODZZ	2540-732-3743	BLADE, WIPER, STANDARD LE721156 (24956)	C	EA	1	•	•	•	•	•	•	•	•	156	1
N	XDOZZ		ARM, WIPER: BLADE ADJUSTABLE, STD LE721156 (24956)	C	EA	1									156	2
N	PAOZZ	2540-881-0467	MOTOR, WINDSHIELD WIPER WMF24-19-1030 (05890)	C	EA	1	•	•	•	•	•	•	•	•	156	3
N	PAOZZ	5305-701-5074	FASTENER, SEAMS: NO. 10-24 THD SIZE, 1/2 IN. LG MS51959-63 (96906)	C	EA	8	•	•	•	•	•	•	•	•	156	4

(1)	(2)	(3)		(4)	(5)	(6)			(7)			(8)	(9)	(10)	
		DESCRIPTION				30-DAY DS MAINT ALLOWANCE			30-DAY GS MAINT ALLOWANCE					ILLUSTRATION	
SMR CODE	FEDERAL STOCK NUMBER	REF NUMBER & MFR CODE	USABLE ON CODE	UNIT OF MEAS	QTY INC IN UNIT	(a) 1-20	(b) 21-50	(c) 51-100	(a) 1-20	(b) 21-50	(c) 51-100	1-YR ALW PER 100 EQUIP CNTGY	DEPOT MAINT ALW PER 100 EQUIP	(a) FIG. NO.	(b) ITEM NO.
N PAOZZ	5305-701-5071	FASTENER, SEAMS: NO. 10-24 THD SIZE, 3/8 IN. LG MS51959-61 (96906)	C	EA	8	•	•	•	•	•	•	•	•	156	5
N XDOZZ		ADJUSTER, WINDSHIELD FIG82N03121NLG (46576)	C	EA	2									156	6
N PAOZZ	5315-234-1863	PIN, COTTER: EYE BOLT PINS, 3/32 IN. DIA, 3/4 IN. LG MS24665-300 (96906)	C	EA	22	•	•	•	•	•	•	•	•	156	7
N MOOZZ		PIN, CANOPY, EYE BOLT 145-4510955-38 (80064) MANUFACTURE FROM:	C	EA	11									156	8
N PAOZZ	5910-189-0577	BAR, ROUND, 5/16 IN., AS REQUIRED QQS763CLASS304 (81348)		FT		•	•	•	•	•	•			156	
N PAOZZ	5310-934-9727	NUT, PLAIN, HEXAGON, JAM: WINDOW DOGS, 3/4-10 THD SIZE MS35691-59 (96906)	C	EA	4	•	•	•	•	•	•	•	•	156	9
N PAOZZ	5310-924-5897	NUT, PLAIN, HEXAGON: WINDOW DOGS, 3/4-10 THD SIZE MS51971-8 (96906)	C	EA	4	•	•	•	•	•	•	•	•	156	10
N PAOZZ	5310-167-0809	WASHER, FLAT: WINDOW DOGS, 3/4 IN. AN960C1216 (88044)	C	EA	8	•	•	•	•	•	•	•	•	156	11
N XDOZZ		DOG, WINDSHIELD 145-4510955-39 (80064)	C	EA	4									156	12
N PAOZZ	9340-417-0541	GLASS, SAFETY, WINDSHIELD: FRONT 145-4510955-43 (80064)	C	EA	2	•	•	•	•	•	•	•	•	156	13
N MOOZZ		LOCK, WINDOW: EXTERNAL 145-4510955-48 (80064) MANUFACTURE FROM:	C	EA	6									156	14
N PCOZZ		SEAL, LOCK, RUBBER, AS REQUIRED 2230GRAY (77969)		FT		•	•	•	•	•	•			156	
N XDOZZ		WINDSHIELD ASSEMBLY 145-4510955-5 (80064)	C	EA	2									156	15
N PAOZZ		LIGHT, CABIN, RED 591RED (89617)	AC	EA	1	•	•	•	•	•	•	•	•	156	16
N PAOZZ	6240-269-0966	LAMP, INCANDESCENT MS15534-11 (96906)	C	EA	1	•	•	•	•	•	•	•	•	156	17
N PAOZZ	9340-417-0538	GLASS, SAFETY: WINDSHIELD SIDE 145-4510955-41 (80064)	C	EA	2	•	•	•	•	•	•	•	•	156	18
N PAOZZ	9340-417-0540	GLASS, SAFETY: WINDSHIELD CORNER 145-4510955-42 (80064)	C	EA	2	•	•	•	•	•	•	•	•	156	19
N PAOZZ	5310-768-0321	NUT, PLAIN, HEXAGON: EYE BOLT, 1/2-13 THD SIZE MS51971-5 (96906)	C	EA	7	•	•	•	•	•	•	•	•	156	20
N PAOZZ	5310-926-5880	WASHER, LOCK: EYE BOLT, 1/2 IN. SCREW SIZE MS35338-162 (96906)	C	EA	7	•	•	•	•	•	•	•	•	156	21
N PAOZZ	5310-167-0803	WASHER, FLAT: HINGE AND DOG PINS, 5/16 IN. AN960C516 (88044)	C	EA	22	•	•	•	•	•	•	•	•	156	22
N PAOZZ	5306-009-3895	EYE BOLT, CANOPY AD832424 (02064)	C	EA	7	•	•	•	•	•	•	•	•	156	23
N XAOZZ		PILOT HOUSE ASSEMBLY 145-4510955-3 (80064)	C	EA	1									156	24
N MOOZZ		GASKET, PACKING, PORT 145-4510955-49 (80064) MANUFACTURE FROM:	C	EA	6									156	25
N PCOZZ	5330-060-2037	GASKET, RUBBER, 1/2 X 1 IN., AS REQUIRED MIL-R-850 (81349)		FT		•	•	•	•	•	•			156	

	(1) SMR CODE	(2) FEDERAL STOCK NUMBER	(3) DESCRIPTION REF NUMBER & MFR CODE	USABLE ON CODE	(4) UNIT OF MEAS	(5) QTY INC IN UNIT	(6) 30-DAY DS MAINT ALLOWANCE (a) 1-20	(b) 21-50	(c) 51-100	(7) 30-DAY GS MAINT ALLOWANCE (a) 1-20	(b) 21-50	(c) 51-100	(8) 1-YR ALW PER 100 EQUIP CNTGY	(9) DEPOT MAINT ALW PER 100 EQUIP	(10) ILLUSTRATION (a) FIG. NO.	(b) ITEM NO.
N	MOOZZ		KEY, WINDOW, EXTERNAL: GLASS RETAINER 145-4510955-55 (80064) MANUFACTURE FROM:	C	EA	6									156	
N	PAOZZ		KEY, RUBBER, AS REQUIRED 469GRAY (77969)		FT		•	•	•	•	•	•			156	
N	MOOZZ		CABLE: 2 COND, 3MON, 600V FLEX 145-4510955-60 (80064) MANUFACTURE FROM:	C	EA	6									156	
N	XDOZZ		UPPER, HINGE, HALF, 4 EA 145-4510955-26 (80064)		EA										156	
N	XDOZZ		LOWER, HINGE, HALF CANOPY, 7 EA 145-4510955-27 (80064)		EA										156	
N	MHOZZ		WEDGE, DOG 145-4510955-28 (80064) MANUFACTURE FROM:	C	EA	4									156	
N	PAHZZ	9530-100-4661	BAR, 1 IN. SQUARE, AS REQUIRED QQA200-5 (81348)		FT					•	•	•			156	
N	MHOZZ		DOG, SPINDLE 145-4510955-33 (80064) MANUFACTURE FROM:	C	EA	2									156	
N	PAHZZ	9530-542-2567	ROD, 1 1/2 IN. DIA, AS REQUIRED QQA200-5 (81348)		FT					•	•	•			156	
N	MOOZZ		ANGLE, EYE BOLT, LATCH 145-4510956-40 (80064) MANUFACTURE FROM:	C	EA	7									156	
N	PAOZZ	9520-034-1441	ANGLE, 3/8 X 1 1/2 X 2 IN., AS REQUIRED MILS20166 (81349)		FT		•	•	•	•	•	•	•	•	156	
N	PAOZZ	5310-982-4945	NUT, PLAIN, SQUARE: LADDER, 5/8-11 THD SIZE MS21304-6 (96906)	C	EA	8	•	•	•	•	•	•	•	•	157	1
N	PAOZZ	5306-959-7818	BOLT, MACHINE: LADDER MTG, SQUARE HEAD, 5/8-11 THD SIZE, 1 1/2 IN. LG MS34355-159 (96906)	C	EA	4	•	•	•	•	•	•	•	•	157	2
N	PAOZZ	5315-982-1914	PIN, TOGGLE: STANCHION BRACE, 3/8 IN. DIA, 3/4 IN. LG 3-81NX3-41NLG (74427)	C	EA	14	•	•	•	•	•	•	•	•	157	3
	MOOZZ		BRACE 145-4510934-62 (80064) MANUFACTURE FROM:		EA	14									157	4
	PAOZZ		PIPE, BLACK, 3/4 IN., AS REQUIRED MILT20157TYPEE (81349)		EA		•	•	•	•	•	•			157	
N	PAOZZ	5315-982-7813	PIN, TOGGLE: LIFELINE, 3/8 IN. DIA, 3 IN. LG 3-81NX3INLG (74427)	C	EA	28	•	•	•	•	•	•	•	•	157	5
N	XDOZZ		STANCHION, LIFELINE 145-4510934-63 (80064)	C	EA	14									157	6
	XDOZZ		SOCKET: LIFELINE STANCHION 145-4510934-18 (80064)	C	EA	14									157	7
N	PAOZZ		HOOK, SWIVEL EYE SNAP: LIFELINES F10251 (45387)	C	EA	19	•	•	•	•	•	•	•	•	157	8
	PAOZZ	5315-982-1914	PIN, TOGGLE: LIFELINE, 3/8 IN. DIA, 3/4 IN. LG 3-81NX3-41NLG (74427)		EA	14	•	•	•	•	•	•	•	•	157	9
N	PAOZZ	5340-005-5807	TURNBUCKLE LIFELINE: 1/2 IN. DIA, 6 IN. LG F10305 (45387)	C	EA	10	•	•	•	•	•	•	•	•	157	10
N	PAOZZ	4030-286-5429	THIMBLE WIRE: LIFELINE, 3/8 IN. ROPE FFT276TYPE2 (81348)	C	EA	14	•	•	•	•	•	•	•	•	157	11

(1) SMR CODE	(2) FEDERAL STOCK NUMBER	(3) DESCRIPTION REF NUMBER & MFR CODE	USABLE ON CODE	(4) UNIT OF MEAS	(5) QTY INC IN UNIT	(6) 30-DAY DS MAINT ALLOWANCE (a) 1-20	(b) 21-50	(c) 51-100	(7) 30-DAY GS MAINT ALLOWANCE (a) 1-20	(b) 21-50	(c) 51-100	(8) 1-YR ALW PER 100 EQUIP CNTGY	(9) DEPOT MAINT ALW PER 100 EQUIP	(10) ILLUSTRATION (a) FIG. NO.	(b) ITEM NO.
N PAOZZ	4030-805-5806	HOOK: LIFELINE OPENINGS, 3/8 IN. 66 (72671)	C	EA	10	•	•	•	•	•	•	•	•	157	12
N MOOZZ		LIFELINE 145-4510934-48 (80064) MANUFACTURE FROM:	C	EA	1									157	13
N PAOZZ	4010-273-2904	ROPE, WIRE, 3/8 IN. DIA, AS REQUIRED RRW0041OTYPE1CLASS2CONSTRUCTION3 (81348)		RL		•	•	•	•	•	•			157	
N PAOZZ	3020-887-8672	SLEAVE, PRESS, WIRE ROPE: LIFELINES 400861 (91675)	C	EA	12	•	•	•	•	•	•	•	•	157	14
N PAOZZ	5305-804-8055	SCREW, MACHINE: ENGINE ROOM DECK PLATES, 1/2-13 THD SIZE, 1 1/4 IN. LG MS35249-142 (96906)	C	EA	301	•	•	•	•	•	•	•	•	158	1
XDOZZ		PLATE, DECK, MAIN 145-4510916P13 (80064)	C	EA	1									158	2
MOOZZ		GASKET: DECK PLATE 145-4510931-8 (80064) MANUFACTURE FROM:	C	EA	2									158	3
PCOZZ	5330-261-5761	GASKET, NEOPRENE, 1/8 IN. THK, AS REQUIRED MMG156 (81348)		SH		•	•	•	•	•	•			158	
N PAOZZ	5310-768-0321	NUT, PLAIN, HEXAGON: ENGINE ROOM DECK PLATES, 1/2-13 THD SIZE MS51971-5 (96906)	C	EA	308	•	•	•	•	•	•	•	•	158	4
N PAOZZ	5305-701-5118	SCREW, MACHINE: DECK PLATES, FLATHEAD, NO. 10-24 THD SIZE, 1 IN. LG MS51959-67 (96906)	C	EA	84	•	•	•	•	•	•	•	•	158	5
N MOOZZ		PLATE, COVER: 20 1/2 IN. DIA 145-4510931-39 (80064) MANUFACTURE FROM:	C	EA	14									158	6
N PAOZZ	9535-866-0295	PLATE, ALUMINUM, 1/4 IN. THK, AS REQUIRED QQA250-7 (81348)		SH		•	•	•	•	•	•			158	
N MOOZZ		GASKET, CANVAS: SIDE DECK PLATES 145-4510931-36 (80064) MANUFACTURE FROM:	C	EA	14									158	7
N PCOZZ	8305-170-5385	CLOTH, DUCK, NO. 6, AS REQUIRED CCCC419TYPE1 (81348)		FT		•	•	•	•	•	•			158	
N PAOZZ	5310-655-9908	NUT, PLAIN, HEXAGON: DECK PLATES, NO. 10-24 THD SIZE 452-25 (05258)	C	EA	84	•	•	•	•	•	•	•	•	158	8
N XDFZZ		HATCH, WATERTIGHT: ENGINE ROOM AND LAZARETTE 145-4510916N1 (80064)	C	EA	2									158	9
N MOOZZ		GASKET, NEOPRENE: ENGINE ROOM COVER 145-4510931-8 (80064) MANUFACTURE FROM:	C	EA	2									158	10
N PAOZZ	5330-261-5761	GASKET, NEOPRENE, 1/8 IN. THK, AS REQUIRED MMG156 (81348)		FT		•	•	•	•	•	•			158	
N PAOZZ	5305-646-7389	SCREW, CAP, HEXAGON HEAD: PUMP WELL MANHOLE COVERS MTG, 1/2-13 THD SIZE, 1 IN. LG MS35307-409 (96906)	C	EA	40	•	•	•	•	•	•	•	•	158	11
XDOZZ		COVER PLATE 145-4510931-29 (80064)	C	EA	2									158	12

(1)	(2)	(3)	(4)	(5)	(6)			(7)			(8)	(9)	(10)	
					30-DAY DS MAINT ALLOWANCE			30-DAY GS MAINT ALLOWANCE					ILLUSTRATION	
SMR CODE	FEDERAL STOCK NUMBER	DESCRIPTION REF NUMBER & MFR CODE	USABLE ON CODE	UNIT OF MEAS	QTY INC IN UNIT	(a) 1-20	(b) 21-50	(c) 51-100	(a) 1-20	(b) 21-50	(c) 51-100	1-YR ALW PER 100 EQUIP CNTGY	DEPOT MAINT ALW PER 100 EQUIP	(a) FIG. NO.	(b) ITEM NO.
N MOOZZ		GASKET, NEOPRENE: MANHOLE COVER, WELL DECK 145-4510931-30 (80064) MANUFACTURE FROM:	C	EA	2									158	13
N PCOZZ	5330-261-5761	GASKET, NEOPRENE, 1/8 IN., AS REQUIRED MMG156 (81348)		SH		•	•	•	•	•	•			158	
PAOZZ	5305-646-7389	SCREW, CAP, HEXAGON HEAD: COVER, 1/2-13 THD SIZE, 1 IN. LG MS35307-109 (96906)		EA	220	•	•	•	•	•	•	•	•	158	14
N XOOZZ		PLATE, DECK, PERKO 6: WELL SIDE POCKET COVER 526 (46576)	C	EA	14									158	15
N MOOZZ		GASKET, NEOPRENE: MANHOLE COVERS 145-4510931-40 (80064) MANUFACTURE FROM:	C	EA	14									158	16
N PCOZZ	5330-261-5761	GASKET, NEOPRENE, 1/8 IN., AS REQUIRED MMG156 (81348)		FT		•	•	•	•	•	•			158	
XOOZZ		LOCKER, LAZARETTE MMC29M14 (98042)	A	EA	1										
XOOZZ		BOX, WRENCH STORAGE MMC29M15 (98042)	A	EA	1										
C XOOZZ		BRACKET, FIRE EXTINGUISHER 108110 (01317)		EA	4										
XOOZZ		VENTILATORS, COWL: 8 IN. 513 (46576)	A	EA	4										
XOFZZ		SCUTTLE, WATERTIGHT 4148J (91943)	A	EA	1										
XOOZZ		PLATE, REGISTRY MMC32-42 (98042)	A	EA	1										
XOOZZ		SPRING, HATCH DOG CATCH MMC32-62 (98042)	A	EA	12										
PAOZZ	2040-115-3706	RATCHET, LOAD BINDER 12 (11749)	AB	EA	2	•	•	•	•	•	•	•	•		
PAOZZ	3020-241-4432	SHEAVE, MASTHEAD F108461 (79577)	AB	EA	1	•	•	•	•	•	•	•	•		
XOOZZ		SHEAVE, MAST MMC8-39 (98042)	AB	EA	1										
XOOZZ		CABLE ASSEMBLY: BOAT HOISTING MMC53E1E2E3 (98042)	AB	EA	1										
PAFZZ	5315-245-3872	PIN, SHEAVE MMC26S12 (98042)	A	EA	3	•	•	•	•	•	•	•	•		
PAFZZ	3120-241-6847	BEARING, SLEEVE MMC26M1 (98042)	A	EA	6	•	•	•	•	•	•	•	•		
XOFZZ		SHEAVE, BRONZE, BUSHED MMC26M4 (98042)	A	EA	3										
PAFZZ	3120-809-5311	BEARING, THRUST TT2400-1 (78992)	A	EA	6	•	•	•	•	•	•	•	•		
XOFZZ		SHEAVE, RAMP CABLE 4249 (17104)	B	EA	2										
PAFZZ	5315-245-3873	PIN, SHEAVE 4292 (17104)	B	EA	1	•	•	•	•	•	•	•	•		
C XAFZZ		BEARING, SLEEVE AA2501-2 (70417)	B	EA	2										
PAFZZ	3120-684-2617	BEARING, SLEEVE, FLANGED FF2501 (70417)	B	EA	2	•	•	•	•	•	•	•	•		

(1) SMR CODE	(2) FEDERAL STOCK NUMBER	(3) DESCRIPTION — REF NUMBER & MFR CODE	USABLE ON CODE	(4) UNIT OF MEAS	(5) QTY INC IN UNIT	(6) 30-DAY DS MAINT ALLOWANCE (a) 1-20	(b) 21-50	(c) 51-100	(7) 30-DAY GS MAINT ALLOWANCE (a) 1-20	(b) 21-50	(c) 51-100	(8) 1-YR ALW PER 100 EQUIP CNTGY	(9) DEPOT MAINT ALW PER 100 EQUIP	(10) ILLUSTRATION (a) FIG. NO.	(b) ITEM NO.
XEOZZ		THIMBLE, WIRE: 3/4 IN. RAMP CABLE FFT276 (81348)	AB	EA	1										
XEOZZ		CLAMP, CABLE: RAMP CABLE MS16842-4 (96906)	AB	EA	4										
HOOZZ		ROPE, WIRE: 60 FT, RAMP CABLE MHC19417 (98042) MANUFACTURE FROM:	AB	EA	1										
PHOZZ	4010-542-2251	WIRE ROPE, AS REQUIRED		FT		•	•	•	•	•	•				
HOOZZ		GASKET: MANHOLE COVER MHC24-5 (98042) MANUFACTURE FROM:	AB	EA	1										
PCOZZ	5330-261-5761	GASKET, AS REQUIRED		FT		•	•	•	•	•	•				
HOOZZ		GASKET: RAMP MHC26949 (98042) MANUFACTURE FROM:	A	EA	1										
PCOZZ	5330-845-1471	GASKET, AS REQUIRED		YD		•	•	•	•	•	•				
HOOZZ		GASKET: RAMP GUM67-17 (26571) MANUFACTURE FROM:	B	EA	1										
PCOZZ	5330-845-1471	GASKET, AS REQUIRED		YD		•	•	•	•	•	•				
HOOZZ		GASKET: ENGINE, ACCESS MHC32-8 (98042) MANUFACTURE FROM:	A	EA	1										
PCOZZ	5330-244-0192	GASKET, AS REQUIRED		YD		•	•	•	•	•	•				
HOOZZ		GASKET: COML VENT MHC32-13 (98042) MANUFACTURE FROM:	A	EA	1										
PCOZZ	5330-261-5761	GASKET, AS REQUIRED		YD		•	•	•	•	•	•				
HOOZZ		GASKET: DECK PLUGS MHC32-36 (98042) MANUFACTURE FROM:	A	EA	1										
PCOZZ	5330-261-5761	GASKET, AS REQUIRED		YD		•	•	•	•	•	•				
HOOZZ		GASKET: COVER WELL DECK MHC32-40 (98042) MANUFACTURE FROM:	A	EA	1										
PCOZZ	5330-261-5761	GASKET, AS REQUIRED		YD		•	•	•	•	•	•				
HOOZZ		GASKET: HATCH MHC32-67 (98042) MANUFACTURE FROM:		EA	1										
PCOZZ	5330-849-8809	GASKET, AS REQUIRED		YD		•	•	•	•	•	•				
PCOZZ	8040-273-8717	CEMENT, RUBBER: GASKET MILA1154 (81349)		YB	2	•	•	•	•	•	•	•	•		
HOOZZ		PACKING, RUDDER 3412-222 (26571) MANUFACTURE FROM:	B	EA	1										
PCOZZ	5330-196-5060	PACKING, AS REQUIRED		YD		•	•	•	•	•	•				
H HOOZZ		ROD, SOUNDING 145-4510926P19 (80064) MANUFACTURE FROM:	C	EA	2										
H PHOZZ	5510-267-2394	WOOD, OAK, 1 IN. THK, AS REQUIRED MHL736 (81348)		FT		•	•	•	•	•	•				
H XEOZZ		BRACKET, LANTERN: ENGINE ROOM 9952931A8 (76714)	C	EA	1										

	(1) SMR CODE	(2) FEDERAL STOCK NUMBER	(3) DESCRIPTION REF NUMBER & MFR CODE	USABLE ON CODE	(4) UNIT OF MEAS	(5) QTY INC IN UNIT	(6) 30-DAY DS MAINT ALLOWANCE (a) 1-20	(b) 21-50	(c) 51-100	(7) 30-DAY GS MAINT ALLOWANCE (a) 1-20	(b) 21-50	(c) 51-100	(8) 1-YR ALW PER 100 EQUIP CNTGY	(9) DEPOT MAINT ALW PER 100 EQUIP	(10) ILLUSTRATION (a) FIG. NO.	(b) ITEM NO.
N	MOOZZ		ROPE LASHING: RAMP HOIST RATCHET, SECURING 145-4510926M6 (80064) MANUFACTURE FROM:	C	EA	2										
N	PCOZZ	4020-689-5688	ROPE, MANILA, 1 1/8 IN. CIRCUMFERENCE, AS REQUIRED TR605TYPEMCLASS2 (81348)		FT		•	•	•	•	•	•				
N	MOOZZ		STAPLE: RATCHET RAMP SECURING 145-4510926M11 (80064) MANUFACTURE FROM:	C	EA	2										
N	PAOZZ	9510-229-4769	ROD, STEEL, 1/2 IN. DIA, AS REQUIRED QQS631COMPSITION1020 (81348)		FT		•	•	•	•	•	•				
N	PAOZZ	5315-982-6307	PIN, TOGGLE: EMERGENCY STEERING RUDDER STOWAGE 1-4INX3-4INLG (96576)	C	EA	1	•	•	•	•	•	•	•	•		
N	MOOZZ		CHAIN, SINGLE JACK: EMERGENCY STEERING RUDDER STOWAGE 145-4510926M5 (80064) MANUFACTURE FROM:	C	EA	1										
N	PAOZZ		CHAIN, SINGLE JACK, NO. 16, AS REQUIRED RRC271CLASS7 (81348)		FT		•	•	•	•	•	•				
N	MOOZZ		BOX ASSEMBLY, BATTERY 145-4510920 (80064) MANUFACTURE FROM:	C	EA	1										
N	MOCZZ		BOX, BATTERY 145-4510920-1 (80064) MANUFACTURE FROM:	C	EA	1										
N	PAOZZ	9515-034-1452	PLATE, STEEL, NO. 1.5 PLATE, AS REQUIRED QQS698 (81348)		SH		•	•	•	•	•	•				
N	MOOZZ		LINING, BATTERY BOX 145-4510920-2 (80064) MANUFACTURE FROM:	C	EA	1										
N	PAOZZ	9535-232-7485	SHEET, LEAD, NO. 4, AS REQUIRED QQL201GRADEC (81348)		SH		•	•	•	•	•	•				
N	MOOZZ		STIFFENER, PLYWOOD, BATTERY BOX 145-4510920-3 (80064) MANUFACTURE FROM:	C	EA	4										
N	PAOZZ	5530-129-2149	PLYWOOD, 1/2 IN. THK, AS REQUIRED NNP530 (81348)		SH		•	•	•	•	•	•				
N	MOOZZ		SPACER, PLYWOOD, BATTERY BOX, COMMERCIAL 145-4510920-4 (80064) MANUFACTURE FROM:	C	EA	4										
N	PAOZZ	5530-129-2093	PLYWOOD, 1/4 IN. THK, AS REQUIRED NNP530 (81348)		SH		•	•	•	•	•	•				
N	MOOZZ		COVER, PLYWOOD, BATTERY BOX, COMMERCIAL 145-4510920-7 (80064) MANUFACTURE FROM:	C	EA	1										
N	PAOZZ	5530-219-2005	PLYWOOD, 3/4 IN. THK, AS REQUIRED NNP530 (81348)		SH		•	•	•	•	•	•				
N	MOOZZ		SEPARATOR, BATTERY BOX, PLYWOOD, COMMERCIAL 145-4510920-19 (80064) MANUFACTURE FROM:	C	EA	7										
N	PAOZZ	5330-129-2005	PLYWOOD, 3/4 IN. THK, AS REQUIRED NNP530 (81348)		SH		•	•	•	•	•	•				

(1) SMR CODE	(2) FEDERAL STOCK NUMBER	(3) DESCRIPTION REF NUMBER & MFR CODE	USABLE ON CODE	(4) UNIT OF MEAS	(5) QTY INC IN UNIT	(6) 30-DAY DS MAINT ALLOWANCE (a) 1-20	(b) 21-50	(c) 51-100	(7) 30-DAY GS MAINT ALLOWANCE (a) 1-20	(b) 21-50	(c) 51-100	(8) 1-YR ALW PER 100 EQUIP CNTGY	(9) DEPOT MAINT ALW PER 100 EQUIP	(10) ILLUSTRATION (a) FIG. NO.	(b) ITEM NO.
N PAOZZ	5305-014-9289	SCREW, WOOD: BATTERY BOX, FLATHEAD, BRASS, NO. 8, 1/2 IN. LG 149289 (00000)	C	EA	24	•	•	•	•	•	•	•	•		
N PAOZZ	5315-010-3803	NAIL, ESCUTCHEON: LEAD LINING, BRASS, NO. 16, 1/2 IN. LG NOREF (33333)	C	EA	48	•	•	•	•	•	•	•	•		
N PAOZZ	5305-014-9307	SCREW, WOOD: COVER, BRASS, FLATHEAD, NO. 8, 1 1/2 IN. LG MS35492-255 (96906)	C	EA	48	•	•	•	•	•	•	•	•		
N PAOZZ	5306-884-8767	BOLT, MACHINE: BATTERY BOX SECURING, 3/8-16 THD SIZE, 1 IN. LG MS35355-64 (96906)	C	EA	4	•	•	•	•	•	•	•	•		
N PAOZZ	5310-637-9541	WASHER, LOCK: BATTERY BOX SECURING, 3/8 IN. SCREW SIZE MS35338-46 (96906)	C	EA	4	•	•	•	•	•	•	•	•		
N PAOZZ	5315-982-6308	PIN, TOGGLE: MAST STOWAGE, 3/8 IN. DIA, 3 1/2 IN. LG 4284 (08716)	C	EA	1	•	•	•	•	•	•	•	•		
N MOOZZ		CHAIN, SINGLE JACK: MAST PIN 125-4510929-2 (80064) MANUFACTURE FROM:	C	EA	1										
N PAOZZ		CHAIN, SINGLE JACK, 16 GAGE, AS REQUIRED RRC271CLASS7 (81348)		FT		•	•	•	•	•	•				
N MOOZZ		LINE LASHING: MAST STOWAGE, 3/4 IN. DIA 125-4510929-3 (80064) MANUFACTURE FROM:	C	EA	6										
N PAOZZ	4020-231-9021	LINE, MANILA, 3/4 IN. DIA, AS REQUIRED TR605TYPEN (81348)		FT		•	•	•	•	•	•				
N MOOZZ		NEOPRENE LINER: MAST STOWAGE BRACKET 125-4510929-14 (80064) MANUFACTURE FROM:	C	EA	7										
N PCOZZ	5330-261-5760	RUBBER, NEOPRENE, 1/16 IN. THK, AS REQUIRED HNG1568 (81348)		SH		•	•	•	•	•	•				
N PCOZZ	8040-145-0019	ADHESIVE: LINING 3422168H (94959)	C	QT	1	•	•	•	•	•	•	•	•		
N MOOZZ		CHAIN, CLOSED: LIFELINE OPENINGS, 1/4 IN. LINK 145-4510934-72 (80064) MANUFACTURE FROM:	C	EA	5										
N PAOZZ		CHAIN, CLOSED, LINK, 1/4 IN., AS REQUIRED RRC271TYPE1GRADECCLASS2 (81348)		FT		•	•	•	•	•	•				
N MOOZZ		CHAIN, SINGLE JACK: BRACE PIN LIFELINE STANCHION 145-4510934-49 (80064) MANUFACTURE FROM:	C	EA	56										
N PAOZZ	4010-228-9963	CHAIN, SINGLE JACK, NO. 10, AS REQUIRED RRC271CLASS7 (81348)		FT		•	•	•	•	•	•				
N XEHZZ		LINK RAMP LIFTING 145-4510934-41 (80064)	C	EA	2										
N PAHZZ	4730-278-3438	PLUG, DOCKING: BRASS, 1 1/4-11 1/2 THD SIZE WMP471TYPE1 (81348)	C	EA	11				•	•	•	•	•		

(1) SMR CODE	(2) FEDERAL STOCK NUMBER	(3) DESCRIPTION REF NUMBER & MFR CODE	USABLE ON CODE	(4) UNIT OF MEAS	(5) QTY INC IN UNIT	(6) 30-DAY DS MAINT ALLOWANCE (a) 1-20	(b) 21-50	(c) 51-100	(7) 30-DAY GS MAINT ALLOWANCE (a) 1-20	(b) 21-50	(c) 51-100	(8) 1-YR ALW PER 100 EQUIP CNTGY	(9) DEPOT MAINT ALW PER 100 EQUIP	(10) ILLUSTRATION (a) FIG. NO.	(b) ITEM NO.
N MDOZZ		HOSE CONNECTION, RUBBER: KEEL COOLER VENT 145-4510915F2 (80064) MANUFACTURE FROM:	C	EA	2										
N PCOZZ	4720-235-4121	HOSE, RUBBER, 2 3/8 IN. ID, AS REQUIRED ZZH428TYPE2GRADEBCLASS1 (81348)		FT		•	•	•	•	•	•				
N PAOZZ	4730-908-6292	CLAMP, HOSE, KEEL COOLER VENT HOSE, 2 EA MS38542-14 (96906)		EA		•	•	•	•	•	•				
N PAOZZ	5310-240-7629	NUTSERT: DECK PLATE, 3/8-16 THD SIZE 9504-12 (19738)	C	EA	325	•	•	•	•	•	•	•	•		
N PAOZZ	5305-925-4801	SCREW, MACHINE: DECK PLATE, PAN HEAD, 3/8-16 THD SIZE, 5/8 IN. LG MS35275-308 (96906)	C	EA	325	•	•	•	•	•	•	•	•		
N PAHZZ	4730-595-0667	COUPLING HALF: RAMP DRAIN POCKET, 3/4 IN. WMP521 (81348)	C	EA	2				•	•	•	•	•		
N PAOZZ	4730-753-8997	PLUG, PIPE: DRAIN RAMP FACE, 3/4-14 THD SIZE 7538997 (19207)	C	EA	2	•	•	•	•	•	•	•	•		
N XDFZZ		WASHER, SQUARE BEVELED: WINCH BASE, 1 1/4 IN. 145-4510942-4 (80064)	C	EA	4										
N PAOZZ	5315-982-7833	PIN, TOGGLE, EYE COLLAR: ANCHOR STOWAGE 3-81NX21-21NLG (08716)	C	EA	1	•	•	•	•	•	•	•	•		
N PAFZZ	5310-176-6267	NUT, SELF-LOCKING: WINCH BASE, 1 1/4-7 THD SIZE MS51922-82 (96906)	C	EA	4	•	•	•	•	•	•	•	•		
N PACZZ	5305-646-7389	SCREW, CAP, HEXAGON HEAD: WINCH COVER PLATE, 1/2-13 THD SIZE, 1 IN. LG MS35307-409 (96906)	C	EA	38	•	•	•	•	•	•	•	•		
N MDOZZ		GASKET, NEOPRENE: WINCH PLATE, 1/8 IN. THK 145-4510942-11 (80064) MANUFACTURE FROM:	C	EA	1										
N PCOZZ	5330-261-5761	GASKET, NEOPRENE, 1/8 IN. THK, AS REQUIRED MMG156 (81348)		SH		•	•	•	•	•	•				
N MDOZZ		GASKET, NEOPRENE: WINCH PLATE OIL DRAIN 145-4510942-12 (80064) MANUFACTURE FROM:	C	EA	1										
N PCOZZ	5330-261-5761	GASKET, NEOPRENE, 1/8 IN. THK, AS REQUIRED MMG156 (81348)		SH		•	•	•	•	•	•				
N MDOZZ		WIRE, ROPE: RAMP WINCH, 3/4 IN. DIA 145-4510942-14 (80064) MANUFACTURE FROM:	C	EA	1										
N PAOZZ	4010-542-2402	ROPE, WIRE, 3/4 IN., AS REQUIRED RWR410TYPE1CLASS3CONST3 (81348)	C	CL		•	•	•	•	•	•				
N PAOZZ	3020-927-1617	SHEAVE LEAD: RAMP CABLE LEAD 4241 (08097)	C	EA	1	•	•	•	•	•	•	•	•		
N PAOZZ		SOCKET EYE, GALVANIZED: RAMP CABLE G0275 (07232)	C	EA	1	•	•	•	•	•	•	•	•		
N PAOZZ	5315-982-1955	PIN, SHEAVE: WINCH SHEAVE, 1 1/2 IN. DIA, 4 1/2 IN. LG 4273 (97892)	C	EA	1	•	•	•	•	•	•	•	•		
N XDOZZ		LOAD BINDER, RATCHET: RAMP SECURING MDORC (93649)	C	EA	2										

(1) SMR CODE	(2) FEDERAL STOCK NUMBER	(3) DESCRIPTION — REF NUMBER & MFR CODE	USABLE ON CODE	(4) UNIT OF MEAS	(5) QTY INC IN UNIT	(6) 30-DAY DS MAINT ALLOWANCE (a) 1-20	(b) 21-50	(c) 51-100	(7) 30-DAY GS MAINT ALLOWANCE (a) 1-20	(b) 21-50	(c) 51-100	(8) 1-YR ALW PER 100 EQUIP CNTGY	(9) DEPOT MAINT ALW PER 100 EQUIP	(10) ILLUSTRATION (a) FIG. NO.	(b) ITEM NO.
H HOOZZ		CHAIN PROOF COIL: RAMP BINDERS 145-4510942-53 (80064) MANUFACTURE FROM:	C	EA	1										
H PAOZZ	4010-219-9395	CHAIN PROOF COIL, 5/8 IN., AS REQUIRED RRC271TYPE1GRADECCLASS4 (81348)		FT		•	•	•	•	•	•				
H PAOZZ	4030-149-5574	SHACKLE ANCHOR, GALVANIZED: RAMP BINDERS, DECK RRC271TYPE4CLASS (81348)	C	EA	2	•	•	•	•	•	•	•	•		
H PAOZZ	4030-185-0476	SHACKLE CHAIN, GALVANIZED: RAMP BINDERS TO CHAIN LINK NAS1043-10 (80205)	C	EA	2	•	•	•	•	•	•	•	•		
H PAOZZ		LINK, SIDE LAP: RAMP BINDERS TO CHAIN SHACKLE TO CHAIN, 5/8 IN., GALVANIZED RRC271TYPE3GALVANIZED (81348)	C	EA	4	•	•	•	•	•	•	•	•		
H PAOZZ		HOOK, C EYE: RAMP BINDER 320C1-1-4X1-7-8IN (75535)	C	EA	2	•	•	•	•	•	•	•	•		
H PAOZZ	4730-517-8062	FITTING, LUBRICATION: WINCH LEAD SHEAVE, 1/8-27 THD SIZE 1634 (95879)	C	EA	1	•	•	•	•	•	•	•	•		
H PAOZZ	4730-595-0677	COUPLING PIPE: LUBRICATION FITTING, 1/8-27 THD SIZE WWP521 (81348)	C	EA	1	•	•	•	•	•	•	•	•		
H HOOZZ		HOSE: WINCH SHEAVE LUBRICATION FITTING 317850-18FTGS (95879) MANUFACTURE FROM:	C	EA	1										
H PCOZZ	4720-887-8622	HOSE, RUBBER, AS REQUIRED 317850F (95879)		FT		•	•	•	•	•	•				
H PACZZ	5305-727-6804	SCREW, CAP, HEXAGON HEAD: STRUT BEARING, 1/2-13 THD SIZE, 1 3/4 IN. LG MS35307-414 (96906)	C	EA	16	•	•	•	•	•	•	•	•		
H PACZZ	5310-933-8778	WASHER, LOCK: STRUT BEARING SCREW, 1/2 IN. SCREW SIZE MS35338-143 (96906)	C	EA	16	•	•	•	•	•	•	•	•		
H PAFZZ	5310-255-0108	NUT, PLAIN, HEXAGON: RUDDER SHOE BOLTS, 7/8-9 THD SIZE, DRILLED HOLE AN121560 (88044)	C	EA	8	•	•	•	•	•	•	•	•		
H PACZZ	5305-917-6337	SETSCREW: STRUT BEARING RETAINER, CUP POINT, 3/8-16 THD SIZE, 5/8 IN. LG MS51021-84 (96906)	C	EA	2	•	•	•	•	•	•	•	•		
H HOOZZ		FLANGE, SEA CHEST 145-4510925P15 (80064) MANUFACTURE FROM:	C	EA	2										
H PAOZZ	9535-231-8290	PLATE, BRASS, 3/4 IN. THK, AS REQUIRED QQB639 (81348)		SH					•	•	•				
H HOOZZ		SHOE RUDDER 145-4510925S7 (80064) MANUFACTURE FROM:	C	EA	2										
H PAOZZ	9515-034-1432	PLATE, STEEL, 2 IN. THK, AS REQUIRED QQS698 (81348)		SH			•	•	•	•	•	•			
H PAOZZ	5315-243-1170	PIN, COTTER: RUDDER SHOE BOLTS AND NUTS, 3/16 IN. DIA, 2 IN. LG MS24665-516 (96906)	C	EA	8	•	•	•	•	•	•	•	•		

	(1) SMR CODE	(2) FEDERAL STOCK NUMBER	(3) DESCRIPTION REF NUMBER & MFR CODE	USABLE ON CODE	(4) UNIT OF MEAS	(5) QTY INC IN UNIT	(6) 30-DAY DS MAINT ALLOWANCE (a) 1-20	(b) 21-50	(c) 51-100	(7) 30-DAY O[C] MAINT ALLOWANCE (a) 1-20	(b) 21-50	(c) 51-100	(8) 1-YR ALW PER 100 EQUIP CNTGY	(9) DEPOT MAINT ALW PER 100 EQUIP	(10) ILLUSTRATION (a) FIG. NO.	(b) ITEM NO.
N	MOHZZ		NIPPLE, THREADED: SEA CHEST OUTLET 145-4510925-5 (80064) MANUFACTURE FROM:	C	EA	2										
N	PAHZZ	4710-289-2854	PIPE, BRASS, 2 IN., SCHEDULE 40, AS REQUIRED WWP351CLASS1 (81348)		FT					•	•	•	•	•		
N	PAFZZ	5305-948-0956	SCREW, CAP, HEXAGON HEAD: RUDDER SHOE BOLTS, 7/8-9 THD SIZE, 4 1/2 IN. LG MS90725-219 (96906)	C	EA	8	•	•	•	•	•	•	•	•		
N	PAHZZ	4730-278-3438	PLUG, DOCKING: AFT SKEG, 1 1/4 IN. WWP471TYPE1 (81348)	C	EA	4				•	•	•	•	•		
N	PAHZZ	4730-057-5555	PLUG, PIPE: SKEG BRACE, 3/8-18 THD SIZE MS49005-6 (96906)	C	EA	24				•	•	•	•	•		
N	MOHZZ		SCREEN, SEA CHEST 145-4510925420 (80064) MANUFACTURE FROM:	C	EA	2										
N	PAHZZ	9515-419-6693	PLATE, STEEL, 1/4 IN., AS REQUIRED QQS698 (81348)		PL					•	•	•	•	•		
N	MOHZZ		GASKET, SEA CHEST 145-4510925421 (80064) MANUFACTURE FROM:	C	EA	2										
N	PCHZZ	5330-261-5761	GASKET, NEOPRENE, 1/8 IN. THK, AS REQUIRED HHG156 (81348)		SH					•	•	•				
N	PAHZZ	5307-982-8934	STUD, WELDING: SEA CHEST OUTLET FLANGE KSH3-8-16RB (84483)	C	EA	8				•	•	•	•	•		
N	MOOZZ		GASKET, NEOPRENE: PILOT HOUSE MANHOLE COVER 145-4510932-5 (80064) MANUFACTURE FROM:	C	EA	2										
N	PCOZZ	5330-261-5761	GASKET, NEOPRENE, 1/8 IN. THK, AS REQUIRED HHG156 (81348)		SH		•	•	•	•	•	•				
N	PAOZZ	5305-960-8588	SCREW, MACHINE: WINCH HYDRAULIC HAND PUMP HANDLE CLIP, ROUNDHEAD, NO. 6-32 THD SIZE, 11/16 IN. LG 10582180-61 (18876)	C	EA	2	•	•	•	•	•	•	•	•		
N	PAOZZ	5310-804-0053	NUT, PLAIN, HEXAGON: WINCH HYDRAULIC PUMP HANDLE CLIP MTG, NO. 6-32 THD SIZE 8634223 (19200)	C	EA	2	•	•	•	•	•	•	•	•		
N	MOHZZ		PLATE, GATE FREEING PORT 145-4510914P14 (80064) MANUFACTURE FROM:	C	EA	4										
N	PAHZZ	9515-237-5417	PLATE, STEEL, AS REQUIRED QQS698 (81348)		SH					•	•	•				
N	PAOZZ	5340-003-4128	CLIP, HOLDER: WINCH HYDRAULIC HAND PUMP HANDLE, NO. 1 F10502 (46576)	C	EA	2	•	•	•	•	•	•	•	•		
N	MOOZZ		PLATE, ACCESS HOLE COVER 145-4510914P15 (80064) MANUFACTURE FROM:	C	EA	1										
N	PAHZZ	9515-237-5417	PLATE, STEEL, AS REQUIRED QQS698 (81348)		SH					•	•	•				
N	MOOZZ		LUG, GATE FREEING PORT GATE 145-4510914530 (80064) MANUFACTURE FROM:	C	EA	8										
N	PAHZZ	9515-419-6693	PLATE, STEEL, 1/4 IN., AS REQUIRED QQS698 (81348)		SH					•	•	•				

(1) NAR CODE	(2) FEDERAL STOCK NUMBER	(3) DESCRIPTION REF NUMBER & MFR CODE	USABLE ON CODE	(4) UNIT OF MEAS	(5) QTY INC IN UNIT	(6) 30-DAY DS MAINT ALLOWANCE (a) 1-30	(b) 31-90	(c) 91-180	(7) 30-DAY GS MAINT ALLOWANCE (a) 1-30	(b) 31-90	(c) 91-180	(8) 1-YR ALW PER 100 EQUIP CNTGY	(9) DEPOT MAINT ALW PER 100 EQUIP	(10) ILLUSTRATION (a) FIG. NO.	(b) ITEM NO.
N HHHZZ		PIN, GATE HINGE FREEING PORT GATE 145-4510914831 (80064) MANUFACTURE FROM:	C	EA	4										
N PANZZ	9530-880-2584	BAR, NAVAL, BRASS, 1/2 IN. DIA, AS REQUIRED QQB637 (81348)		FT					•	•	•				
N HHDZZ		PLATE, ACCESS HOLD COVER: BOW PORT 145-4510914P19 (80064) MANUFACTURE FROM:	C	EA	1										
N PANZZ	9515-237-5417	PLATE, STEEL, AS REQUIRED QQB698 (81348)		SH					•	•	•				
N PADZZ	4730-701-9364	PLUG, PIPE: PIPE FENDERS ON SIDES, 3/4-14 THD SIZE 7019364 (19207)	C	EA	20	•	•	•	•	•	•	•	•		
N HDDZZ		GASKET, NEOPRENE: LAZARETTE HATCH COVER, FUEL TANK REMOVAL 145-4510931-51 (80064) MANUFACTURE FROM:	C	EA	1										
N PCDZZ	5330-261-5761	GASKET, NEOPRENE, 1/8 IN., AS REQUIRED HHG156 (81348)		FT		•	•	•	•	•	•				
N HDDZZ		GASKET, NEOPRENE: FUEL TANK INSPECTION PLATE 145-4510923-98 (80064) MANUFACTURE FROM:	C	EA	4										
N PCDZZ	5330-261-5761	GASKET, NEOPRENE, 1/8 IN., AS REQUIRED HHG156 (81348)		FT		•	•	•	•	•	•				
N PADZZ	5330-133-4576	SEAL, THREAD PARKER: FUEL TANK STUDS 75001-2 (93061)	C	EA	64	•	•	•	•	•	•	•	•		
N XDDZZ		ELBOW, PIPE: SEA CHEST OUTLET, BRASS, 45 DEG, 2-11 1/2 THD SIZE 3409A (63686)	C	EA	2										
N HDDZZ		PLYWOOD: ENGINE ROOM LOCKER 145-4510923-69 (80064) MANUFACTURE FROM:	C	EA	2										
N PADZZ	5530-129-2177	PLYWOOD, 5/8 IN. THK, AS REQUIRED MMP536 (81348)		SH		•	•	•	•	•	•				
N HDDZZ		PLYWOOD: ENGINE ROOM LOCKER 145-4510923-70 (80064) MANUFACTURE FROM:	C	EA	2										
N PADZZ	5530-129-2177	PLYWOOD, 5/8 IN. THK, AS REQUIRED MMP530 (81348)		SH		•	•	•	•	•	•				
N HDDZZ		PLYWOOD: ENGINE ROOM LOCKER 145-4510923-71 (80064) MANUFACTURE FROM:	C	EA	1										
N PADZZ	5530-129-2177	PLYWOOD, 5/8 IN. THK, AS REQUIRED MMP530 (81348)		SH		•	•	•	•	•	•				
N HDDZZ		PLYWOOD: ENGINE LOCKER ROOM 145-4510923-72 (51563) MANUFACTURE FROM:	C	EA	1										
N PADZZ	5530-129-2177	PLYWOOD, 5/8 IN. THK, AS REQUIRED MMP530 (81348)		FT		•	•	•	•	•	•				
N PADZZ	5340-946-2187	HASP, BRIGHT ZINC PLATE: ENGINE ROOM LOCKER 915K (87541)	C	EA	1	•	•	•	•	•	•	•	•		
N PADZZ	5340-231-2642	HINGE, STEEL: ENGINE ROOM LOCKER MS27956-22 (96906)	C	EA	2	•	•	•	•	•	•	•	•		
N PADZZ	5305-068-0502	SCREW, CAP, HEXAGON HEAD: ENGINE ROOM STORAGE BOX SECURING, 1/4-20 THD SIZE, 3/4 IN. LG MS90725-6 (96906)	C	EA	4	•	•	•	•	•	•	•	•		

(1) SMR CODE	(2) FEDERAL STOCK NUMBER	(3) DESCRIPTION REF NUMBER & MFR CODE	USABLE ON CODE	(4) UNIT OF MEAS	(5) QTY INC IN UNIT	(6) 30-DAY DS MAINT ALLOWANCE (a) 1-20	(b) 21-50	(c) 51-100	(7) 30-DAY GS MAINT ALLOWANCE (a) 1-20	(b) 21-50	(c) 51-100	(8) 1-YR ALW PER 100 EQUIP CNTGY	(9) DEPOT MAINT ALW PER 100 EQUIP	(10) ILLUSTRATION (a) FIG. NO.	(b) ITEM NO.
N PAOZZ	5310-761-6882	NUT, PLAIN, HEXAGON: ENGINE ROOM STOWAGE BOX SECURING, 1/4-20 THD SIZE MS51967-2 (96906)	C	EA	4	•	•	•	•	•	•	•	•		
N PAOZZ	5310-823-8804	WASHER, FLAT: ENGINE ROOM STOWAGE BOX SECURING MS27183-9 (96906)	C	EA	4	•	•	•	•	•	•	•	•		
N PAOZZ	5305-637-1149	SCREW, CAP, HEXAGON HEAD: PROP STOWAGE, 1/2-13 THD SIZE, 7 3/4 IN. LG MIL5933 (81349)	C	EA	2	•	•	•	•	•	•	•	•		
N PACZZ	5310-768-0318	NUT, PLAIN, HEXAGON: PROP STOWAGE, 1/2-13 THD SIZE MS51967-14 (96906)	C	EA	2	•	•	•	•	•	•	•	•		
N PACZZ	5310-579-3603	WASHER: PROP STOWAGE, 9/16 IN. ID, 2.125 IN. OD, .134 IN. THK 446502 (24617)	C	EA	2	•	•	•	•	•	•	•	•		
N PACZZ	5305-068-0502	SCREW, CAP, HEXAGON HEAD: EMERGENCY TILLER STOWAGE, 1/4-20 THD SIZE, 3/4 IN. LG MS90725-6 (96906)	C	EA	1	•	•	•	•	•	•	•	•		
N PACZZ	5310-761-6882	NUT, PLAIN, HEXAGON: EMERGENCY TILLER STOWAGE, 1/4-20 THD SIZE MS51967-2 (96906)	C	EA	1	•	•	•	•	•	•	•	•		
N XOOZZ		BRACKET, FIRE EXTINGUISHER 108110 (01317)	C	EA	4										
N PAOZZ	5310-913-8881	NUT, PLAIN, HEXAGON: MAST LOWER SHEAVE PIN, 3/8-16 THD SIZE MS51971-3 (96906)	C	EA	1	•	•	•	•	•	•	•	•		
N MOOZZ		WASHER: MAST HEEL PIN 125-4510928-45 (80064) MANUFACTURE FROM:	C	EA	4										
N PAOZZ	9515-235-7613	SHEET, STAINLESS STEEL, 1/8 IN. THK, AS REQUIRED MIL35059 (81349)		SH		•	•	•	•	•	•				
N PAOZZ	5305-782-9494	SCREW, CAP, HEXAGON HEAD: MAST COLLAR RETAINER, 1/2-13 THD SIZE, 1 3/4 IN. LG MS90725-114 (96906)	C	EA	4	•	•	•	•	•	•	•	•		
N PAOZZ	5310-899-9151	NUT, PLAIN, HEXAGON: MAST COLLAR RETAINING MS51967-13 (96906)	C	EA	4	•	•	•	•	•	•	•	•		
N PAOZZ	5305-044-4153	SCREW, CAP, HEXAGON HEAD: 1/2-13 THD SIZE, 1 IN. L... MS90725-109 (96906)	C	EA	150	•	•	•	•	•	•	•	•		
N PACZZ	5305-719-3997	SCREW, CAP, HEXAGON HEAD: WINCH OIL PLUG DRAIN COVER MS35307-303 (96906)	C	EA	2	•	•	•	•	•	•	•	•		
N PAOZZ	5310-950-1309	WASHER: RAMP LEAD WIRE SHEAVE, 1 1/2 IN. OD, 3 1/4 IN. OD, .165 IN. THK MS27183-31 (96906)	C	EA	2	•	•	•	•	•	•	•	•		
N PAOZZ	5305-527-4965	SCREW, CAP, HEXAGON HEAD: PILOT CONTROL MANHOLE COVER MS35309-60 (96906)	C	EA	40	•	•	•	•	•	•	•	•		
N PAOZZ	5310-913-8881	NUT, PLAIN, HEXAGON: PILOT CONTROL MANHOLE COVER, 3/8-16 THD SIZE MS51971-3 (96906)	C	EA	40	•	•	•	•	•	•	•	•		
N PAOZZ	5306-275-9972	BOLT, MACHINE: HORN MTG, 3/8-16 THD SIZE, 1 IN. LG 43870118-7360 (10001)	C	EA	3	•	•	•	•	•	•	•	•		

	(1) SMR CODE	(2) FEDERAL STOCK NUMBER	(3) DESCRIPTION REF NUMBER & MFR CODE	USABLE ON CODE	(4) UNIT OF MEAS	(5) QTY INC IN UNIT	(6) 30-DAY DS MAINT ALLOWANCE (a) 1-20	(b) 21-50	(c) 51-100	(7) 30-DAY GS MAINT ALLOWANCE (a) 1-20	(b) 21-50	(c) 51-100	(8) 1-YR ALW PER 100 EQUIP CNTGY	(9) DEPOT MAINT ALW PER 100 EQUIP	(10) ILLUSTRATION (a) FIG. NO.	(b) ITEM NO.
N	PAOZZ	5310-732-0558	NUT, PLAIN, HEXAGON: HORN MTG, 3/8-16 THD SIZE MS51967-8 (96906)	C	EA	3	•	•	•	•	•	•	•	•		
N	PAHZZ	5305-873-5502	SCREW, MACHINE: SEA CHEST SCREEN, FLATHEAD, 1/4-20 THD SIZE, 7/8 IN. LG 9157792-100 (18876)	C	EA	24				•	•	•	•	•		
N	PAHZZ	5310-732-0558	NUT, PLAIN, HEXAGON: SEA CHEST OUTLET FLANGE, 3/8-16 THD SIZE MS51967-8 (96906)	C	EA	8				•	•	•	•	•		
N	PAHZZ	5310-087-7493	WASHER: SEA CHEST OUTLET FLANGE, 3/8 IN. SCREW SIZE MS27183-13 (96906)		EA	8				•	•	•	•	•		
N	MOOZZ		STRIP FIRING: ENGINE ROOM LOCKER CORNER BRACE 145-4510923-82 (80064) MANUFACTURE FROM:	C	EA	1										
N	PAOZZ	5510-273-6764	LUMBER, SOFTWOOD, AS REQUIRED MIL-L-751 (81348)		FT		•	•	•	•	•	•				
N	PAFZZ	5305-958-9946	SCREW, CAP, HEXAGON HEAD: ENGINE SUPPORT RAIL, 1-8 THD SIZE, 4 1/2 IN LG MS90725-240 (96906)	C	EA	12	•	•	•	•	•	•	•	•		
N	MFZZ		CHOCK, ENGINE MTG: ENGINE SUPPORT RAIL 145-4510917-02 (80064) MANUFACTURE FROM:	C	EA	16										
N	PAFZZ	9515-222-5059	PLATE, STEEL, 1/2 IN., AS REQUIRED QQS-741-GRADE-C (81348)		SH		•	•	•	•	•	•				
N	MFZZ		MOUNTING RESILIENT: ENGINE SUPPORT RAIL 145-4510917-03 (80064) MANUFACTURE FROM:	C	EA	16										
N	PAFZZ		FABREERA RESILIENT, 5/8 IN. THK, AS REQUIRED 3X6-5-8INTHK (73015)		SH		•	•	•	•	•	•				
N	PAFZZ	5305-008-9042	SCREW, HEXAGON HEAD, BODY BOUND: ENGINE SUPPORT RAIL MS90725-261 (96906)	C	EA	4	•	•	•	•	•	•	•	•		
N	MFZZ		WASHER: ENGINE SUPPORT RAIL 145-4510917-05 (80064) MANUFACTURE FROM:	C	EA	12										
N	PAFZZ	9515-784-2836	PLATE, STEEL, 1/4 IN. THK, AS REQUIRED QQS-741 (81348)		SH		•	•	•	•	•	•				
N	PAFZZ	5310-762-6248	NUT, PLAIN, HEXAGON: ENGINE SUPPORT RAIL MS51967-29 (96906)	C	EA	12	•	•	•	•	•	•	•	•		
N	PAFZZ	5310-891-3826	NUT, HEXAGON, JAM: ENGINE SUPPORT RAIL, 1-8 THD SIZE MS35691-73 (96906)	C	EA	12	•	•	•	•	•	•	•	•		
N	PAFZZ	5310-762-6242	NUT, PLAIN, HEXAGON: ENGINE SUPPORT RAIL, 1 1/8-7 THD SIZE MS51967-32 (96906)	C	EA	4	•	•	•	•	•	•	•	•		
N	PAFZZ	5310-891-3829	NUT, HEXAGON, JAM: ENGINE SUPPORT RAIL, 1 1/8-7 THD SIZE MS35691-81 (96906)	C	EA	4	•	•	•	•	•	•	•	•		
N	MFZZ		WASHER: ENGINE SUPPORT RAIL 145-4510917-10 (80064) MANUFACTURE FROM:	C	EA	4										
N	PAFZZ	9515-222-5059	PLATE, STEEL, 1/2 IN. THK, AS REQUIRED QQS-741-GRADE-C (81348)		SH		•	•	•	•	•	•				

(1)	(2)	(3)		(4)	(5)	(6)			(7)			(8)	(9)	(10)	
						30-DAY DS MAINT ALLOWANCE			30-DAY GS MAINT ALLOWANCE					ILLUSTRATION	
SMR CODE	FEDERAL STOCK NUMBER	DESCRIPTION REF NUMBER & MFR CODE	USABLE ON CODE	UNIT OF MEAS	QTY INC IN UNIT	(a) 1-20	(b) 21-50	(c) 51-100	(a) 1-20	(b) 21-50	(c) 51-100	1-YR ALW PER 100 EQUIP CNTGY	DEPOT MAINT ALW PER 100 EQUIP	(a) FIG. NO.	(b) ITEM NO.
N XDOZZ		BOX, STOWAGE: EAR PROTECTORS IN PILOT STAND 2924-1 (95516)	C	EA	1										
N PAOZZ	4030-185-0482	SHACKLE, ANCHOR: MAST HOIST LINE RRC271TYPE4CLASS1 (81348)	C	EA	1	*	*	*	*	*	*	*	*		
N MOOZZ		CHAIN, SINGLE JACK: STERN MAST 125-4510928-62 (80064) MANUFACTURE FROM:	C	EA	4										
N PAOZZ		CHAIN, SINGLE JACK, 16 GAGE, AS REQUIRED RRC271CLASS7 (81348)		FT		*	*	*	*	*	*				
N MOOZZ		WIRE, 10 GAGE: NAME TAGS SECURING 145-4510936M1 (80064) MANUFACTURE FROM:	C	EA	10										
N PAOZZ	9525-287-8396	WIRE, COPPER, 10 GAGE, AS REQUIRED QQW321COMPOSITION7ANNEALED (81348)		FT		*	*	*	*	*	*				
N PAOZZ	4730-187-0840	CONNECTOR, MALE: ENGINE OIL PRESSURE GAGE PILOT HOUSE C5205X4 (79470)	C	EA	14	*	*	*	*	*	*	*	*		
N XDOZZ		NUT, FLARE: ENGINE OIL PRESSURE GAGE, PILOT HOUSE C5115X4 (79470)	C	EA	36										
N PAOZZ	4730-804-1923	TEE, UNION: ENGINE OIL PRESSURE GAGE MS24402-4 (96906)	C	EA	4	*	*	*	*	*	*	*	*		
N PAOZZ	4730-684-7531	CONNECTOR, FEMALE: ENGINE GEARBOX OIL PRESSURE GAGE C5255X4 (79470)	C	EA	6	*	*	*	*	*	*	*	*		
N MOOZZ		TUBE, COPPER: ENGINE AND GEARBOX OIL PRESSURE LINE 145-4510932-43 (80064) MANUFACTURE FROM:	C	EA	50										
N PAOZZ	4710-277-6108	TUBE, COPPER, 1/4 IN. OD, AS REQUIRED WWT799TYPEX (81348)		FT		*	*	*	*	*	*				
N PAOZZ	4730-580-7417	BUSHING: ENGINE GEARBOX GAGE, ENGINE ROOM C3109X8X4 (79470)	C	EA	4	*	*	*	*	*	*	*	*		
N PAOZZ	4730-811-7740	CONNECTOR, MALE: ENGINE GEARBOX OIL LINE C5205X8X8 (79470)	C	EA	4	*	*	*	*	*	*	*	*		
N XDOZZ		TEE, RUN: ENGINE GEARBOX OIL LINE SF15861-8-12 (98441)	C	EA	4										
N PAOZZ	4730-618-3410	CONNECTOR, MALE: ENGINE GEARBOX OIL LINE ADP686 (93234)	C	EA	4	*	*	*	*	*	*	*	*		
N PACZZ	5305-478-0273	SCREW, MACHINE: SIDE PLATE FORWARD WELL DECK, 3/8-16 THD SIZE, 1/2 IN. LG MS35307-355 (96906)	C	EA	44	*	*	*	*	*	*	*	*		
N PAOZZ	5305-281-5665	SCREW, MACHINE: WELL DECK LIGHTS MTG, ROUNDHEAD, 1/4-20 THD SIZE, 1 IN. LG 34-421 (35301)	C	EA	4	*	*	*	*	*	*	*	*		
N PAOZZ	5310-761-6882	NUT, PLAIN, HEXAGON: WELL DECK LIGHTS, 1/4-20 THD SIZE MS51967-2 (86896)	C	EA	4	*	*	*	*	*	*	*	*		
N PAOZZ	5305-792-9495	SCREW, CAP, HEXAGON HEAD: FUEL TANK MTG, 1/2-13 THD SIZE, 1 1/4 IN. LG MS90725-111 (96906)	C	EA	16	*	*	*	*	*	*	*	*		
N PAOZZ	5310-768-0318	NUT, PLAIN, HEXAGON: FUEL TANK MTG, 1/2-13 THD SIZE MS51967-14 (96906)	C	EA	16	*	*	*	*	*	*	*	*		

(1) SMR CODE	(2) FEDERAL STOCK NUMBER	(3) DESCRIPTION REF NUMBER & MFR CODE	USABLE ON CODE	(4) UNIT OF MEAS	(5) QTY INC IN UNIT	(6) 30-DAY DS MAINT ALLOWANCE (a) 1-20	(b) 21-50	(c) 51-100	(7) 30-DAY GS MAINT ALLOWANCE (a) 1-20	(b) 21-50	(c) 51-100	(8) 1-YR ALW PER 100 EQUIP CNTGY	(9) DEPOT MAINT ALW PER 100 EQUIP	(10) ILLUSTRATION (a) FIG. NO.	(b) ITEM NO.
N PAOZZ	5310-809-5997	WASHER, FLAT: FUEL TANK MTG, 1/2 IN. SCREW SIZE MS27183-17 (96906)	C	EA	16	•	•	•	•	•	•	•	•		
N PAOZZ	5310-149-9116	WASHER: FUEL TANK INSPECTION PLATE MS20002C8 (96906)	C	EA	64	•	•	•	•	•	•	•	•		
N PAOZZ	5307-134-8860	BOLT, STUD: FUEL TANK INSPECTION PLATE, 1/2-13 THD SIZE, 1 3/4 IN. LG 145-4510923-106 (80064)	C	EA	64	•	•	•	•	•	•	•	•		
N PAOZZ	5310-768-0318	NUT, PLAIN, HEXAGON: FUEL TANK INSPECTION PLATE MS51967-14 (96906)	C	EA	64	•	•	•	•	•	•	•	•		
N PCOZZ	8040-446-8473	SEALANT LOCTITE: FUEL TANK INSPECTION PLATES BOLTS 95-204630-601 (58854)	C	PT	1	•	•	•	•	•	•	•	•		
N PACZZ	5305-717-5467	SCREW, CAP, HEXAGON HEAD: BELL BRACKET, 3/8-16 THD SIZE, 1 1/4 IN. LG MS35307-362 (96906)	C	EA	4	•	•	•	•	•	•	•	•		
N PACZZ	5310-913-8881	NUT, PLAIN, HEXAGON: BELL BRACKET, 3/8-16 THD SIZE MS51971-3 (96906)	C	EA	4	•	•	•	•	•	•	•	•		
N PACZZ	5310-984-7042	WASHER, LOCK: BELL BRACKET, 3/8 IN. SCREW SIZE MS35338-141 (96906)	C	EA	4	•	•	•	•	•	•	•	•		
N PAOZZ	5305-007-6064	SCREW, CAP, HEXAGON HEAD: RAMP WIRE END SECURING PIN, 1 1/8-12 THD SIZE, 1 1/2 IN. LG MS35308-556 (96906)	C	EA	1	•	•	•	•	•	•	•	•		
N PAOZZ	5315-241-7332	PIN, COTTER: RAMP WIRE END SECURING BOLT, 1/8 IN. DIA, 1 1/2 IN. LG MS24665-374 (96906)	C	EA	1	•	•	•	•	•	•	•	•		
N PAFZZ	5305-965-6840	SCREW, CAP, HEXAGON HEAD: WINCH BASE, 1 1/4-7 THD SIZE, 4 3/4 IN. LG MS90728-280 (96906)	C	EA	4	•	•	•	•	•	•	•	•		
N PAOZZ	5310-401-5175	NUT, CASTELLATED: RAMP WIRE END SECURING BOLT, 1 1/8-12 THD SIZE MS35692-1824 (81348)	C	EA	1	•	•	•	•	•	•	•	•		
N PAOZZ	4030-805-5806	HOOK, CHAIN: LIFELINE, 3/8 IN.	C	EA	10	•	•	•	•	•	•	•	•		
N MOOZZ		CHAIN, CLOSED LINK 145-4510934-72 (80064) MANUFACTURE FROM:	C	EA	5										
N PAOZZ	4010-988-3181	CHAIN, 1/4 IN., CLOSED LINK, 22 IN. REQUIRED FOR EA CHAIN RRC271TYPE1GRADEOCLASS1 (81348)		FT		•	•	•	•	•	•				
N PAOZZ	5305-021-3801	SCREW, CAP, HEXAGON HEAD: ENGINE ROOM HATCH COVER, 1/2-13 THD SIZE, 1 1/4 IN. LG MS35307-411 (96906)	C	EA	7	•	•	•	•	•	•	•	•		
N PAOZZ	5310-614-3506	WASHER, FLAT: ENGINE ROOM HATCH COVER, 1/2 IN. SCREW SIZE MS15795-817 (96906)		EA	7	•	•	•	•	•	•	•	•		
N PAOZZ	6145-260-8795	CABLE, ELECTRIC: NO. 16 AWG MILC915TYPEOMOF3 (81349) (AS REQUIRED)		FT		•	•	•	•	•	•	•	•		
N PAOZZ	5935-325-0469	PLUG, DOUBLE POLE, GROUNDED: 15 AMP, 125-250V M2726-50-001 (81349)	C	EA	1	•	•	•	•	•	•	•	•		
N XDOZZ		TERMINAL, LUG, WIPER, MOTOR M8857-200 (59730)	C	EA	2										
N PAOZZ	5340-792-0943	TY-RAP: ELECTRIC CABLE CLAMP TY33M (59730)	C	EA	3	•	•	•	•	•	•	•	•		

(1)	(2)	(3)		(4)	(5)	(6) 30-DAY DS MAINT ALLOWANCE			(7) 30-DAY GS MAINT ALLOWANCE			(8)	(9)	(10) ILLUSTRATION	
SMR CODE	FEDERAL STOCK NUMBER	DESCRIPTION REF NUMBER & MFR CODE	USABLE ON CODE	UNIT OF MEAS	QTY INC IN UNIT	(a) 1-20	(b) 21-50	(c) 51-100	(a) 1-20	(b) 21-50	(c) 51-100	1-YR ALW PER 100 EQUIP CNTGY	DEPOT MAINT ALW PER 100 EQUIP	(a) FIG. NO.	(b) ITEM NO.
N PAOZZ	5305-059-3662	SCREW, MACHINE: ELECTRIC CABLE CLAMP, NO. 10-32 THD SIZE, 7/8 IN. LG MS51958-66 (96906)	C	EA	3	•	•	•	•	•	•	•	•		
N PAOZZ	5310-302-6676	LOCKNUT: ELECTRIC CABLE CLAMP, NO. 10-32 THD SIZE MS21083N3 (96906)	C	EA	3	•	•	•	•	•	•	•	•		
N XDHZZ		RAMP ASSEMBLY LCM8-145-4510924REVA (80064)	C	EA	1										
N PAFZZ	2040-173-1741	HINGE, CASTING RAMP 145-4510924M1 (80064)	C	EA	1	•	•	•	•	•	•	•	•		
N MHHZZ		TUBING, HINGE PIN 145-4510924M3 (80064) MANUFACTURE FROM:	C	EA	2										
N PAHZZ	4710-277-9890	TUBING, 3 IN. OD, 1/2 IN. WALL, 3 FT, 7 1/4 IN. REQUIRED FOR EA TUBE MIL T6732 (81349)		FT					•	•	•	•			
N MFFZZ		PIPE, RAMP, CABLE LEAD 145-4510924M4 (80064) MANUFACTURE FROM:	C	EA	1										
N PAHZZ	4710-277-8707	PIPE, 1 1/2 IN., SCHEDULE 40, 14 FT, 6 1/2 IN. REQUIRED WWP404GRADEBCLASSA53BS (81348)		FT					•	•	•				
N MOOZZ		GASKET, RAMP, SEAL 145-4510924M8 (80064) MANUFACTURE FROM:	C	EA	1										
N PGZZZ	5330-845-1471	GASKET, SEAL, AS REQUIRED 554TYPEC (91527)		FT		•	•	•	•	•	•				
N XDHZZ		SHEAVE HOUSING, RAMP CABLE 145-4510924M14M1 (80064)	C	EA	1										
N PAHZZ	3020-927-1617	SHEAVE, RAMP, WIRE 4241 (08097)	C	EA	2				•	•	•	•	•		
N PAHZZ	5315-869-5136	PIN, CENTER, SHEAVE 4272 (08097)	C	EA	2				•	•	•	•	•		
N MHHZZ		TUBING, WIRE, LEAD 145-4510924M18 (80064) MANUFACTURE FROM:	C	EA	2										
N PAHZZ	4710-052-2602	TUBING, 2 IN. OD, 1/2 IN. WALL, 2 3/4 IN. REQUIRED FOR EA TUBE QQT830 (81348)		FT					•	•	•				
N PAHZZ	3120-352-3584	BEARING, PLAIN, OILITE AA2501-2 (19121)	C	EA	2				•	•	•	•	•		
N PAHZZ	3120-684-2617	BEARING, FLANGED, OILITE FF2501 (19121)	C	EA	2				•	•	•	•	•		
N PAHZZ	5310-850-8155	WASHER, FLAT: SHEAVE, 1 IN. ID, 1 3/4 IN. OD, .134 IN. THK SMC389213-4 (80864)	C	EA	4				•	•	•	•	•		
N PAOZZ	4730-050-4203	FITTING, LUBRICATION: RAMP HINGE MS15001-1 (96906)	C	EA	14	•	•	•	•	•	•	•	•		
N PAHZZ	5310-809-5997	WASHER: SHEAVE HOUSING BRACKET, 1/2 IN. SCREW SIZE MS27183-17 (96906)	C	EA	18				•	•	•	•	•		
N PAHZZ	5305-071-2069	SCREW, CAP, HEXAGON HEAD: RAMP PLATES, 1/2-13 THD SIZE, 1 1/2 IN. LG MS90728-113 (96906)	C	EA	18				•	•	•	•	•		
N PAOZZ	5305-719-3997	SCREW, CAP, HEXAGON HEAD: RAMP PLATES, 1/4-20 THD SIZE, 1 IN. LG MS35307-303 (96906)	C	EA	68	•	•	•	•	•	•	•	•		

(1) Shelf Code	(2) Federal Stock Number	(3) DESCRIPTION REF NUMBER & MFR CODE	Usable On Code	(4) Unit of Meas	(5) Qty Inc in Unit	(6) 30-Day DS Maint Allowance (a) 1-20	(b) 21-50	(c) 51-100	(7) 30-Day GS Maint Allowance (a) 1-20	(b) 21-50	(c) 51-100	(8) 1-Yr Alw per 100 Equip Cntgy	(9) Depot Maint Alw per 100 Equip	(10) Illustration (a) Fig. No.	(b) Item No.
N PAOZZ	5305-724-5813	SCREW, SOCKET SET: HINGE PIN COLLAR, 3/8-24 THD SIZE, 3/8 IN. LG MS51964-66 (96906)	C	EA	8	•	•	•	•	•	•	•	•		
N MOOZZ		TUBING, ROUND: HINGE PIN COLLAR 145-451092-039 (80064) MANUFACTURE FROM:	C	EA	4										
N PAMZZ		TUBING, 3 3/4 IN. OD, 7/16 IN. WALL, AS REQUIRED MILT6732 (81349)		FT					•	•	•				
N XDMZZ		WASHER, RAMP HINGE: 3 1/8 IN. ID, 5 1/2 IN. OD, 3/8 IN. THK 145-451092-040 (80064)	C	EA	2										
N PAMZZ	5310-768-0318	NUT, PLAIN, HEXAGON: SHEAVE BRACKET, 1/2-13 THD SIZE MS51967-14 (96906)	C	EA	12				•	•	•	•	•		
N PAMZZ	4720-374-7640	HOSE ASSEMBLY: SHEAVE LUBRICATION, 18 IN. LG 317850-1F (01045)	C	EA	2				•	•	•	•	•		
N PAOZZ	4730-864-6219	SWIVEL: MALE TO FEMALE, LUBRICATION HOSE 7253-73 (28161)	C	EA	2	•	•	•	•	•	•	•	•		
N PAMZZ	4730-231-2412	CAP, PIPE: SHEAVE LUBRICATION FITTING, 3/4-14 THD SIZE WWP421 (81348)	C	EA	2				•	•	•	•	•		
N PAMZZ	4730-187-7594	COUPLING, PIPE: WELDED TO CAP, 1/8-27 THD SIZE WWP421 (81348)	C	EA	2				•	•	•	•	•		
N PAFZZ	5310-781-1351	RIVNUT, RAMP SS25-200 (76500)	C	EA	28	•	•	•	•	•	•	•	•		
N PAFZZ	5310-003-1788	RIVNUT SS25-260 (76500)	C	EA	34	•	•	•	•	•	•	•	•		
N PAFZZ	5310-003-1789	RIVNUT SS25-380 (76500)	C	EA	6	•	•	•	•	•	•	•	•		
N PAFZZ	2040-409-0066	PLATE, PIPE DECK: EXTRA TANK FILL, W/KEY F10528-2-1-21NBRONZE (46576)	C	EA	2	•	•	•	•	•	•	•	•		
N PAFZZ		SCREW, FLATHEAD: PLATE MTG, BRASS, 1/4-20 THD SIZE, 1 1/2 IN. LG MS35245-92 (96906)	C	EA	8	•	•	•	•	•	•	•	•		
N PAFZZ	5310-842-1699	NUT, BRASS: PLATE MTG, 1/4-20 THD SIZE MS35691-4 (96906)	C	EA	8	•	•	•	•	•	•	•	•		
N PAFZZ	5310-184-8970	WASHER, LOCK: PLATE MTG, 1/4 IN. SCREW SIZE MS35338-101 (96906)	C	EA	8	•	•	•	•	•	•	•	•		
N PAOZZ	5306-922-5275	BOLT, FLANGE FL1-10-10P10 (62983)	C	EA	2	•	•	•	•	•	•	•	•		

(1) SMR CODE	(2) FEDERAL STOCK NUMBER	(3) DESCRIPTION REF NUMBER & MFR CODE	USABLE ON CODE	(4) UNIT OF MEAS	(5) QTY INC IN UNIT	(6) 30-DAY DS MAINT ALLOWANCE (a) 1-20	(b) 21-50	(c) 51-100	(7) 30-DAY GS MAINT ALLOWANCE (a) 1-20	(b) 21-50	(c) 51-100	(8) 1-YR ALW PER 100 EQUIP CNTGY	(9) DEPOT MAINT ALW PER 100 EQUIP	(10) ILLUSTRATION (a) FIG. NO.	(b) ITEM NO.
		GROUP 85 - PIPING BILGE													
PAOZZ	4730-908-6292	CLAMP, HOSE: 3 1/2 IN. MS35842-14 (96906)	AB	EA	120	•	•	•	•	•	•	•	•	159	1
MOOZZ		HOSE, RUBBER: 2 7/8 IN. ID MMC49F8 (98042) MANUFACTURE FROM:	AB	EA	1									159	2
PCOZZ	4720-288-9756	HOSE, AS REQUIRED		FT		•	•	•	•	•	•			159	
PAOZZ	4730-909-8627	CLAMP, HOSE: 2 3/4 IN. MS35842-13 (96906)	AB	EA	18	•	•	•	•	•	•	•	•	159	3
MOOZZ		HOSE, RUBBER: 1 5/8 IN. ID MMC49F9 (98042) MANUFACTURE FROM:	A	EA	1									159	4
PCOZZ	4720-235-4127	HOSE, AS REQUIRED		FT		•	•	•	•	•	•			159	
MOOZZ		HOSE, RUBBER: 1 7/8 IN. ID MMC49F10 (98042) MANUFACTURE FROM:	A	EA	1									159	5
PCOZZ	4720-235-4126	HOSE, AS REQUIRED		FT		•	•	•	•	•	•			159	
MOOZZ		HOSE, RUBBER: 2 1/8 IN. ID MMC49F11 (98042) MANUFACTURE FROM:	A	EA	1									159	6
PCOZZ	4720-235-4122	HOSE, AS REQUIRED		FT		•	•	•	•	•	•			159	
MOOZZ		HOSE, RUBBER: 2 3/8 IN. ID MMC49F12 (98042) MANUFACTURE FROM:	AB	EA	1									159	7
PCOZZ	4720-235-4121	HOSE, AS REQUIRED		FT		•	•	•	•	•	•			159	
MOOZZ		HOSE, RUBBER: 2 5/8 IN. ID MMC49F13 (98042) MANUFACTURE FROM:	A	EA	1									159	8
PCOZZ	4720-287-4837	HOSE, AS REQUIRED		FT		•	•	•	•	•	•			159	
R PAOZZ	4820-555-9761	COCK, DRAIN: BILGE 702 (14959)	A	EA	1	•	•	•	•	•	•	•	•	159	9
XDOZZ		VALVE, CHECK 130311-2 (14959)	A	EA	2									159	10
XDOZZ		VALVE, CHECK 13032 (14959)	A	EA	1									159	11
XDOZZ		VALVE, GATE: 125 LB, BRONZE 132011-2 (14959)	A	EA	2									159	12
XDOZZ		VALVE, GATE: 125 LB, BRONZE 13202 (14959)	A	EA	3									159	13
XDOZZ		VALVE, GATE: 125 LB, BRONZE 132021-2 (14959)	A	EA	1									159	14
XDOZZ		VALVE, GLOBE: 125 LB, BRONZE 121-2 (14959)	A	EA	10									159	15
PCCZZ	3030-528-4616	BELT, V: PUMP DRIVE 3580 (24161)	A	EA	2	•	•	•	•	•	•	•	•	159	16
PCCZZ	3030-528-4627	BELT, V: PUMP DRIVE 3720 (24161)	A	EA	1	•	•	•	•	•	•	•	•	159	17
PAOZZ	4320-251-2139	STRAINER AND CHECK VALVE ASSEMBLY 2225A (76122)		EA	8	•	•	•	•	•	•	•	•	159	18
XAOZZ		CAP 2226A (76122)		EA	1									159	
XAOZZ		BASE 2121 (76122)		EA	1									159	

(1)	(2)	(3)		(4)	(5)	(6)			(7)			(8)	(9)	(10)	
		DESCRIPTION				30-DAY DS MAINT ALLOWANCE			30-DAY GS MAINT ALLOWANCE			1-YR ALW PER 100 EQUIP CNTGY	DEPOT MAINT ALW PER 100 EQUIP	ILLUSTRATION	
SMR CODE	FEDERAL STOCK NUMBER	REF NUMBER & MFR CODE	USABLE ON CODE	UNIT OF MEAS	QTY INC IN UNIT	(a) 1-20	(b) 21-50	(c) 51-100	(a) 1-20	(b) 21-50	(c) 51-100			(a) FIG. NO.	(b) ITEM NO.
PCOZZ	5330-236-3718	SEAL, NEOPRENE: CAP 2103A (76122)		EA	1	•	•	•	•	•	•	•	•	159	
PAOZZ	4320-922-0226	PLATE: LARGE 2105A (76122)		EA	1	•	•	•	•	•	•	•	•	159	
PAOZZ	4320-922-0227	PLATE: SMALL 2104A (76122)		EA	1	•	•	•	•	•	•	•	•	159	
PAOZZ		BUSHING 2223 (76122)		EA	1	•	•	•	•	•	•	•	•	159	
PACZZ	4730-908-6293	CLAMP, HOSE: 4 1/4 IN. MS35842-15 (96906)	AB	EA	8	•	•	•	•	•	•	•	•	160	1
HOOZZ		HOSE, RUBBER: 2 7/8 IN., BILGE PIPING 36-10-210 (26571) MANUFACTURE FROM:	AB	EA	1									160	2
PCOZZ	4720-288-9756	HOSE, AS REQUIRED		FT		•	•	•	•	•	•			160	
PACZZ	4730-909-8627	CLAMP, HOSE: 2 3/4 IN. MS35842-13 (96906)	AB	EA	8	•	•	•	•	•	•	•	•	160	3
HOOZZ		HOSE, RUBBER: 1 7/8 IN. ID 37-22-210 (26571) MANUFACTURE FROM:	AB	EA	1									160	4
PCOZZ	4720-235-4126	HOSE, AS REQUIRED		FT		•	•	•	•	•	•			160	
PACZZ	4730-908-6292	CLAMP, HOSE: 3 1/2 IN. MS35842-14 (96906)	AB	EA	4	•	•	•	•	•	•	•	•	160	5
HOOZZ		HOSE, RUBBER 38058-210 (26571) MANUFACTURE FROM:	B	EA	1									160	6
PCOZZ	4720-454-4933	HOSE, AS REQUIRED		FT		•	•	•	•	•	•			160	
HOOZZ		HOSE, RUBBER: 2 1/8 IN. 38071-210 (26571) MANUFACTURE FROM:	B	EA	1									160	7
PCOZZ	4720-837-1466	HOSE, AS REQUIRED		FT		•	•	•	•	•	•			160	
HOOZZ		GASKET 38C13C210 (26571) MANUFACTURE FROM:	AB	EA	1									160	8
PCOZZ	5330-261-5760	GASKET, AS REQUIRED		FT		•	•	•	•	•	•			160	
N PACZZ	4730-909-8627	CLAMP, HOSE: 2 IN. MS35842-13 (96906)	C	EA	8	•	•	•	•	•	•	•	•	161	1
N HOOZZ		HOSE, WATER, RUBBER: 2 5/8 IN. ID 508-4510948-147 (80064) MANUFACTURE FROM:	C	EA	1									161	2
N PCOZZ	4720-287-4837	HOSE, FLEXIBLE, 2 5/8 IN., AS REQUIRED ZZHA2BTYPE3GRADEBCLASS2ORS (81348)		FT		•	•	•	•	•	•			161	
N HOOZZ		TUBE, COPPER: TYPE K, 2 1/8 IN. OD 508-4510948-77 (80064) MANUFACTURE FROM:	C	EA	1									161	3
N PAOZZ	4710-278-2222	TUBE, COPPER, 2 1/8 IN. OD, AS REQUIRED WWT799TYPEKCLASS2 (81348)		FT		•	•	•	•	•	•			161	
N PAOZZ	4820-287-3098	VALVE, CHECK: 2 IN. 34-2 (14959)	C	EA	1	•	•	•	•	•	•	•	•	161	4
N XDOZZ		ELBOW: COPPER, 45 DEG, 2 IN. 606-2 (14959)	C	EA	2									161	5
N PAOZZ	5310-761-6882	NUT, PLAIN, HEXAGON: BILGE LINE, 1/4-20 THD SIZE MS51967-2 (96906)	C	EA	16	•	•	•	•	•	•	•	•	161	6

	(1) SMR CODE	(2) FEDERAL STOCK NUMBER	(3) DESCRIPTION REF NUMBER & MFR CODE	USABLE ON CODE	(4) UNIT OF MEAS	(5) QTY INC IN UNIT	(6) 30-DAY DS MAINT ALLOWANCE (a) 1-20	(b) 21-50	(c) 51-100	(7) 30-DAY GS MAINT ALLOWANCE (a) 1-20	(b) 21-50	(c) 51-100	(8) 1-YR ALW PER 100 EQUIP CNTGY	(9) DEPOT MAINT ALW PER 100 EQUIP	(10) ILLUSTRATION (a) FIG. NO.	(b) ITEM NO.
N	PAOZZ	5310-582-5965	WASHER, LOCK: BILGE LINE, STEEL, 1/4 IN. SCREW SIZE MS35338-44 (96906)	C	EA	16	•	•	•	•	•	•	•	•	161	7
N	PAOZZ	5306-672-1924	U-BOLT: BILGE LINE, 1/4 IN. 16131 (05748)	C	EA	2	•	•	•	•	•	•	•	•	161	8
N	PAOZZ	4730-754-6797	UNION, COPPER: TUBE A11214 (41967)	C	EA	2	•	•	•	•	•	•	•	•	161	9
N	PAOZZ	4820-822-0651	VALVE, GATE: BILGE LINE, 2 IN. 428-2 (14959)	C	EA	1	•	•	•	•	•	•	•	•	161	10
N	XDOZZ		ELBOW: 2 IN., 90 DEG, L.R. SOLID, TYPE C-C PD15-242 (74163)	C	EA	1									161	11
N	PAOZZ	4820-554-8391	DRAIN, COCK, SCREWED: BRONZE, 1/2 IN. 1121 (48422)	C	EA	1	•	•	•	•	•	•	•	•	161	12
N	XDOZZ		TEE, REDUCING, CAST SOLID: TYPE C-C-F PD10-480-2X2X1-2IN (74163)	C	EA	1									161	13
N	MDOZZ		TUBE, COPPER: 2 1/8 IN. OD, 4 IN. LG 508-45109A8-166 (80064) MANUFACTURE FROM:	C	EA	3									161	14
N	PAOZZ	4710-278-2222	TUBE, COPPER: 2 1/8 IN. OD, AS REQUIRED WWT799TYPEXCLASS2 (81348)		FT		•	•	•	•	•	•			161	
N	MDOZZ		HOSE, WATER, RUBBER: 2 1/8 IN. ID, 12 IN. LG 508-45109A8-165 (80064) MANUFACTURE FROM:	C	EA	1									161	15
N	PCOZZ	4720-235-4122	HOSE, RUBBER, 2 1/8 IN. ID, AS REQUIRED ZZH28TYPE2GRADEBCLASS1 (81348)		FT		•	•	•	•	•	•			161	
N	PAOZZ	4730-818-5197	ELBOW: 2 IN., 90 DEG SLIP RING PD15-235-2IN (74163)	C	EA	5	•	•	•	•	•	•	•	•	161	16
N	XDOZZ		ADAPTER, CAST SOLID: TYPE C-M, 2 IN. PD10-101 (74163)		EA	1									161	17
N	PACZZ	4730-908-3193	CLAMP, HOSE: 1 1/2 IN. MS35842-12 (96906)	C	EA	4	•	•	•	•	•	•	•	•	161	18
N	MDOZZ		HOSE, DISCHARGE, RUBBER: 1 5/8 IN. ID 508-45109A8-95 (80064) MANUFACTURE FROM:	C	EA	2									161	19
N	PCOZZ	4720-235-4127	HOSE, RUBBER, 1 5/8 IN. OD, AS REQUIRED ZZH28TYPE2GRADEBCLASS1OR2 (81348)		FT		•	•	•	•	•	•			161	
N	MDOZZ		TUBE, COPPER: 1 5/8 IN. OD 508-45109S8-154 (80064) MANUFACTURE FROM:	C	EA	1									161	20
N	PAOZZ	4710-846-1003	TUBE, COPPER, 1 5/8 IN. OD, AS REQUIRED WWT799TYPEXCLASS1 (81348)		FT		•	•	•	•	•	•			161	
N	PAOZZ	4730-250-7953	ELBOW, STREET: 90 DEG, LG R FITTING PD15-272-1-1-2IN (74163)	C	EA	2	•	•	•	•	•	•	•	•	161	21
N	MDOZZ		TUBE, COPPER: TYPE K, 1 5/8 IN. OD 508-45109A8-107 (80064) MANUFACTURE FROM:	C	EA	1									161	22
N	PAOZZ	4710-846-1003	TUBE, COPPER, 1 5/8 IN. OD, AS REQUIRED WWT799TYPEXCLASS1 (81348)		FT		•	•	•	•	•	•			161	

(1) SMR CODE	(2) FEDERAL STOCK NUMBER	(3) DESCRIPTION REF NUMBER & MFR CODE	USABLE ON CODE	(4) UNIT OF MEAS	(5) QTY INC IN UNIT	(6) 30-DAY DS MAINT ALLOWANCE (a) 1-20	(b) 21-50	(c) 51-100	(7) 30-DAY GS MAINT ALLOWANCE (a) 1-20	(b) 21-50	(c) 51-100	(8) 1-YR ALW PER 100 EQUIP CNTGY	(9) DEPOT MAINT ALW PER 100 EQUIP	(10) ILLUSTRATION (a) FIG. NO.	(b) ITEM NO.
N XDOZZ		ADAPTER, MALE: COPPER, 1 1/2 IN. 604-1-1-2 (14959)	C	EA	6									161	23
N PAOZZ		VALVE, CHECK: BRONZE, 1 1/2 IN. 34-1-1-2 (14959)	C	EA	2	•	•	•	•	•	•	•	•	161	24
N MOOZZ		PIPE, SEAMLESS: 1 1/2 X 5 1/2 IN. LG, STEEL, SCHEDULE 80 508-4510948-116 (80064) MANUFACTURE FROM:	C	EA	2									161	25
N PAOZZ	4710-277-5452	PIPE, 1 1/2 IN. STEEL, SEAMLESS, SCHEDULE 80, AS REQUIRED WWP404GRADEACLASSA53AERWXS (81348)		FT		•	•	•	•	•	•			161	
N MFFZZ		PLATE, DOUBLER: OVERBOARD DISCHARGE 508-4510948-117 (80064) MANUFACTURE FROM:	C	EA	2									161	26
N PAFZZ	9515-238-8617	PLATE, DOUBLER, 3/16 IN. THK, AS REQUIRED MILS22698TYPE1CLASSA (81349)		SH		•	•	•	•	•	•			161	
N PAOZZ	5306-937-1312	U-BOLT: BILGE LINE, 1 1/2 IN. 8724752 (19207)	C	EA	4	•	•	•	•	•	•	•	•	161	27
N MOOZZ		TUBE, COPPER: TYPE K, 1 5/8 IN. OD 508-4510948-107 (80064) MANUFACTURE FROM:	C	EA	1									161	28
N PAOZZ	4710-846-1003	TUBE, COPPER, 1 5/8 IN. OD, AS REQUIRED WWT799TYPECLASS1 (81348)		FT		•	•	•	•	•	•			161	
N PAOZZ		VALVE, GATE: 1 1/2 IN. 428-1-1-2 (14959)		EA	2	•	•	•	•	•	•	•	•	161	29
N PAOZZ	4820-554-8391	DRAIN, COCK: 1/2 IN. SCREWED, BRONZE, 1/2 IN. 1121 (48422)	C	EA	2	•	•	•	•	•	•	•	•	161	30
N XDOZZ		TEE, REDUCING: CAST SOLID 1 1/2 X 1 1/2 X 1/2 IN. PD10-480 (74163)	C	EA	2									161	31
N XDOZZ		PLUG, SQUARE HEAD: PIPE, 2 1/2 IN., 3430 (63686)	C	EA	1									162	1
N PACZZ	4730-908-3193	CLAMP, HOSE: 1 1/2 IN. MS35842-12 (96906)	C	EA	4	•	•	•	•	•	•	•	•	162	2
N MOOZZ		HOSE, WATER, RUBBER: 1 5/8 IN. ID, 5 IN. LG 508-4510948-156 (80064) MANUFACTURE FROM:	C	EA	2									162	3
N PCOZZ	4720-235-4127	HOSE, RUBBER, 1 5/8 IN. ID, AS REQUIRED		FT		•	•	•	•	•	•			162	
N XDOZZ		CLAMP, PIPE: EXTENSION SPLIT, 1 1/2 IN. 138 (26403)	C	EA	32									162	4
N MOOZZ		PIPE: SCHEDULE 40, GALVANIZED, 1/4 IN. 508-4510948-25 (80064) MANUFACTURE FROM:	C	EA	1									162	5
N PAOZZ	4710-277-5475	PIPE, 1/4 IN., SCHEDULE 40, ASIM-A53, AS REQUIRED WWP404GRADEACLASSA53AERW (81348)		FT		•	•	•	•	•	•			162	
N MOOZZ		TUBE, COPPER: 1 5/8 IN. OD 508-4510948-152 (80064) MANUFACTURE FROM:	C	EA	1									162	6
N PAOZZ	4710-846-1003	TUBE, COPPER, 1 5/8 IN., AS REQUIRED WWT799TYPEKCLASS1 (81348)		FT		•	•	•	•	•	•			162	

(1) SMR CODE	(2) FEDERAL STOCK NUMBER	(3) DESCRIPTION REF NUMBER & MFR CODE	USABLE ON CODE	(4) UNIT OF MEAS	(5) QTY INC IN UNIT	(6) 30-DAY DS MAINT ALLOWANCE (a) 1-20	(b) 21-50	(c) 51-100	(7) 30-DAY GS MAINT ALLOWANCE (a) 1-20	(b) 21-50	(c) 51-100	(8) 1-YR ALW PER 100 EQUIP CNTGY	(9) DEPOT MAINT ALW PER 100 EQUIP	(10) ILLUSTRATION (a) FIG. NO.	(b) ITEM NO.
N PAOZZ	4730-791-6797	UNION, COPPER TUBE A1121A (81967)	C	EA	2	•	•	•	•	•	•	•	•	162	7
N XDOZZ		DRAIN, DECK 60-160 (59158)	C	EA	2									162	8
N MDOZZ		TUBE, COPPER: 1 5/8 IN. OD 508-4510948-154 (80064) MANUFACTURE FROM:	C	EA	1									162	9
N PAOZZ	4710-846-1003	TUBE, COPPER, 1 5/8 IN. OD, AS REQUIRED WWT799TYPEKCLASS1 (81348)		FT		•	•	•	•	•	•			162	
N XDOZZ		ADAPTER: 1 1/2 X 2 IN. W1178 (81967)	C	EA	2									162	10
N PAOZZ		CROSS: NO. 125, SCREWED, 2 1/2 X 2 1/2 X 2 X 2 IN. 3413 (63686)	C	EA	1	•	•	•	•	•	•	•	•	162	11
N MDOZZ		TUBE, COPPER: 1 5/8 IN. OD 508-4510948-153 (80064) MANUFACTURE FROM:	C	EA	1									162	12
N PAOZZ	4710-846-1003	TUBE, COPPER, 1 5/8 IN. OD, AS REQUIRED WWT799TYPEKCLASS1 (81348)		FT		•	•	•	•	•	•			162	
N PACZZ	4730-908-3193	CLAMP, HOSE MB35842-12 (96906)	C	EA	4	•	•	•	•	•	•	•	•	162	13
N MDOZZ		HOSE, FLEX: 7/8 IN. ID, 24 IN. LG 245-4510946F50 (80064) MANUFACTURE FROM:	C	EA	3									162	14
N PAOZZ	4720-230-6526	HOSE, FLEX, 7/8 IN. ID, AS REQUIRED ZZH428TYPE1GRADE (81348)		FT		•	•	•	•	•	•			162	
N MDOZZ		PIPE, COPPER 245-4510946P9 (80064) MANUFACTURE FROM:	C	EA	1									162	15
N PAOZZ	4710-277-6101	PIPE, COPPER, AS REQUIRED		FT		•	•	•	•	•	•			162	
N PAOZZ	4730-943-0458	ELBOW: 90 DEG, 1/2 IN. 3651 (63686)	C	EA	1	•	•	•	•	•	•	•	•	162	16
N MDOZZ		PIPE, BRASS 245-4510946P14 (80064) MANUFACTURE FROM:	C	EA	1									162	17
N PAOZZ	4710-289-2851	PIPE, BRASS, 1/2 IN., AS REQUIRED		FT		•	•	•	•	•	•			162	
N MDOZZ		PIPE, RED, BRASS: 2 3/8 IN. OD, 3 FT LG 508-4510948-104 (80064) MANUFACTURE FROM:	C	EA	1									162	18
N PAOZZ		PIPE, RED, BRASS, 2 3/8 IN. OD, AS REQUIRED WWP351SPECCLASS1 (81348)		FT		•	•	•	•	•	•			162	
N PAOZZ		ELBOW: 90 DEG, SCREWED, NO. 125 3405-2-1-2IN (63686)	C	EA	1	•	•	•	•	•	•	•	•	162	19
N XDOZZ		NIPPLE, CLOSE PIPE: IPS, SCHEDULE 40 2INCLOSE (63686)	C	EA	4									162	20
N XDOZZ		TEE, REDUCING: SCREWED 3411-2X1-2X2IN (63686)	C	EA	2									162	21
N PAOZZ	4820-822-0651	VALVE, GATE: SCREWED, NO. 125 428-2 (14959)	C	EA	2	•	•	•	•	•	•	•	•	162	22
N PAOZZ	4730-845-4100	ADAPTER: COPPER TUBE PD15-101-2IN (74163)	C	EA	1	•	•	•	•	•	•	•	•	162	23

(1) SMR CODE	(2) FEDERAL STOCK NUMBER	(3) DESCRIPTION REF NUMBER & MFR CODE	USABLE ON CODE	(4) UNIT OF MEAS	(5) QTY INC IN UNIT	(6) 30-DAY DS MAINT ALLOWANCE (a) 1-20	(b) 21-50	(c) 51-100	(7) 30-DAY GS MAINT ALLOWANCE (a) 1-20	(b) 21-50	(c) 51-100	(8) 1-YR ALW PER 100 EQUIP CNTGY	(9) DEPOT MAINT ALW PER 100 EQUIP	(10) ILLUSTRATION (a) FIG. NO.	(b) ITEM NO.
N MOOZZ		TUBE, COPPER 508-4510948-166 (80064) MANUFACTURE FROM:	C	EA	3									162	24
N PAOZZ	4710-278-2222	TUBE, COPPER, 2 1/8 IN. OD, AS REQUIRED		FT		•	•	•	•	•	•			162	
N PAOZZ		ELBOW: 90 DEG, SLIP RING COPPER PD15-235-2-1-2IN (74163)	C	EA	3	•	•	•	•	•	•	•	•	162	25
N PACZZ	4730-908-3193	CLAMP, HOSE: 1 1/2 IN. MB35842-12 (96906)	C	EA	2	•	•	•	•	•	•	•	•	162	26
N MOOZZ		HOSE, WATER, RUBBER 508-4510948-165 (80064) MANUFACTURE FROM:	C	EA	1									162	27
N PCOZZ	4720-235-4122	HOSE, RUBBER, 2 1/8 IN. ID, AS REQUIRED ZZH28TYPE2GRADEBCLASS1 (81348)		FT		•	•	•	•	•	•			162	
N MOOZZ		TUBE, COPPER: 2 1/8 IN. OD 508-4510948-159 (80064) MANUFACTURE FROM:	C	EA	2									162	28
N PAOZZ	4710-278-2222	TUBE, COPPER, 2 1/8 IN. OD, AS REQUIRED		FT		•	•	•	•	•	•			162	
N PAOZZ	4730-722-3591	ADAPTER, COPPER: TUBE PD15101-2-1-2IN (74163)	C	EA	7	•	•	•	•	•	•	•	•	162	29
N PACZZ	4730-134-4222	CLAMP, HOSE: 2 1/2 IN. 52HS (66295)	C	EA	110	•	•	•	•	•	•	•	•	162	30
N MOOZZ		HOSE, WATER, RUBBER: 2 5/8 IN. ID 508-4510948-147 (80064) MANUFACTURE FROM:	C	EA	1									162	31
N PAOZZ	4720-287-4837	HOSE, FLEXIBLE: 2 5/8 IN. ID, AS REQUIRED ZZH28TYPE3GRADEBCLASS2ORS (81348)		FT		•	•	•	•	•	•			162	
N PAOZZ		COUPLING, COMPRESSION: 2 7/8 IN. 250-2-7-8IN (34749)	C	EA	1	•	•	•	•	•	•	•	•	162	32
N MOOZZ		TUBE, COPPER: 2 5/8 IN. OD, 10 IN. LG 508-4510948-173 (80064) MANUFACTURE FROM:	C	EA	1									162	33
N PAOZZ	4710-278-2223	TUBE, COPPER, 2 5/8 IN. OD, AS REQUIRED WWT799TYPEXFORM1 (81348)		FT		•	•	•	•	•	•			162	
N MOOZZ		TUBE, COPPER: 2 5/8 IN. OD, 12 IN. LG 508-4510948-174 (80064) MANUFACTURE FROM:	C	EA	1									162	34
N PAOZZ	4710-278-2223	TUBE, COPPER, 2 5/8 IN. OD, AS REQUIRED WWT799TYPEXFORM1 (81348)		FT		•	•	•	•	•	•			162	
N MOOZZ		TUBE, COPPER: 2 5/8 IN. OD 508-4510948-144 (80064) MANUFACTURE FROM:	C	EA	2									162	35
N PAOZZ	4710-278-2223	TUBE, COPPER, 2 5/8 IN. OD, AS REQUIRED WWT799TYPEXFORM1 (81348)		FT		•	•	•	•	•	•			162	
N PAOZZ	4820-899-5730	VALVE, GLOBE: NO. 125, 2 1/2 IN. 1 (14959)	C	EA	8	•	•	•	•	•	•	•	•	162	36
N MOOZZ		TUBE, COPPER: 2 5/8 IN. OD 508-4510948-158 (80064) MANUFACTURE FROM:	C	EA	9									162	37
N PAOZZ	4710-278-2223	TUBE, COPPER, 2 5/8 IN. OD, AS REQUIRED		FT		•	•	•	•	•	•			162	

(1)	(2)	(3)		(4)	(5)	(6) 30-DAY DS MAINT ALLOWANCE			(7) 30-DAY GS MAINT ALLOWANCE			(8)	(9)	(10) ILLUSTRATION	
SMR CODE	FEDERAL STOCK NUMBER	DESCRIPTION REF NUMBER & MFR CODE	USABLE ON CODE	UNIT OF MEAS	QTY INC IN UNIT	(a) 1-20	(b) 21-50	(c) 51-100	(a) 1-20	(b) 21-50	(c) 51-100	1-YR ALW PER 100 EQUIP CNTGY	DEPOT MAINT ALW PER 100 EQUIP	(a) FIG. NO.	(b) ITEM NO.
N PAOZZ	4730-957-5336	TEE, REDUCING: SCREWED, NO. 125, 2 1/2 X 2 1/2 X 3/4 IN. 3411 (63686)	C	EA	1	•	•	•	•	•	•	•	•	162	38
N MOOZZ		HOSE, WATER, RUBBER: 2 1/8 IN. ID 508-4510948-169 (80064) MANUFACTURE FROM:	C	EA	1									162	39
N PCOZZ	4720-235-4122	HOSE, RUBBER, 2 1/8 IN. ID, AS REQUIRED ZZH42BTYPE2GRADEBCLASS1 (81348)		FT		•	•	•	•	•	•			162	
N MOOZZ		TUBE, COPPER: 2 1/8 IN. OD 508-4510948-162 (80064) MANUFACTURE FROM:	C	EA	1									162	40
N PAOZZ	4710-278-2222	TUBE, COPPER, 2 1/8 IN. OD, AS REQUIRED WWT799TYPEKCLASS2 (81348)		FT		•	•	•	•	•	•			162	
N MOOZZ		TUBE, COPPER: 2 1/8 IN. OD, 1 FT, 5 IN. LG 508-4510948-167 (80064) MANUFACTURE FROM:	C	EA	1									162	41
N PAOZZ	4710-278-2222	TUBE, COPPER, 2 1/8 IN. OD, AS REQUIRED WWT799TYPEKCLASS2 (81348)		FT		•	•	•	•	•	•			162	
N MOOZZ		TUBE, COPPER: 2 5/8 IN. OD 508-4510948-160 (80064) MANUFACTURE FROM:	C	EA	1									162	42
N PAOZZ	4710-278-2223	TUBE, COPPER, 2 5/8 IN. OD, AS REQUIRED		FT		•	•	•	•	•	•			162	
N MOOZZ		TUBE, COPPER: SUCTION MANIFOLD, 4 1/8 IN. OD 508-4510948-148 (80064) MANUFACTURE FROM:		EA	1									162	43
N PAOZZ	4710-822-9538	TUBE, COPPER, 4 1/8 IN., AS REQUIRED 74877A (00742)		FT		•	•	•	•	•	•			162	
N XDOZZ		CAP, TUBE: 4 1/8 IN. PD15-154 (74163)	C	EA	2									162	44
N XDOZZ		PETCOCK, SCREWED 757 (48422)	C	EA	8									163	1
N XDOZZ		NIPPLE, THREADED: BOTH ENDS 1-8INX11NLG (14959)	C	EA	8									163	2
N XDOZZ		CLAMP, EXTENSION: SPLIT PIPE, 2 1/2 IN. 138-2-1-21N (26403)	C	EA	32									163	3
N MOOZZ		LINER, RUBBER: 50-60 DUR, 1/16 IN. THK 508-4510948-89 (80064) MANUFACTURE FROM:	C	EA	1									163	4
N PCOZZ	5330-505-6611	GASKET, 1/16 IN. THK, AS REQUIRED MILR3065GRADESC614-4ABEF (81349)		SH		•	•	•	•	•	•			163	
N MOOZZ		PIPE: GALVANIZED, SCHEDULE 40, 1/2 IN. 508-4510948-13 (80064) MANUFACTURE FROM:	C	EA	1									163	5
N PAOZZ	4710-277-8703	PIPE, 1/2 IN., SCHEDULE 40, GALVANIZED, AS REQUIRED WWP404GRADEBCLASSA53BS (81348)		FT		•	•	•	•	•	•			163	
N XDOZZ		ELBOW: 90 DEG, SLIP RING, COPPER PD15-235-2-1-21N (74163)	C	EA	3									163	6

(1) SMR CODE	(2) FEDERAL STOCK NUMBER	(3) DESCRIPTION REF NUMBER & MFR CODE	USABLE ON CODE	(4) UNIT OF MEAS	(5) QTY INC IN UNIT	(6) 30-DAY DS MAINT ALLOWANCE (a) 1-20	(b) 21-50	(c) 51-100	(7) 30-DAY GS MAINT ALLOWANCE (a) 1-20	(b) 21-50	(c) 51-100	(8) 1-YR ALW PER 100 EQUIP CNTGY	(9) DEPOT MAINT ALW PER 100 EQUIP	(10) ILLUSTRATION (a) FIG. NO.	(b) ITEM NO.
N MOOZZ		TUBE, COPPER: 2 5/8 IN. OD 508-4510948-141 (80064) MANUFACTURE FROM:	C	EA	5									163	7
N PAOZZ	4710-278-2223	TUBE, COPPER, 2 5/8 IN. OD, AS REQUIRED WWT799TYPEKFORM1 (81348)		FT		•	•	•	•	•	•			163	
N PAOZZ		COUPLING, COMPRESSION: 3/4-14 THD SIZE, 5 IN. LG 210 (34749)	C	EA	5	•	•	•	•	•	•	•	•	163	8
N PACZZ	4730-134-4222	CLAMP, HOSE: 2 1/2 IN. 52HB (66295)		EA	70	•	•	•	•	•	•	•	•	163	9
N MOOZZ		HOSE, WATER, RUBBER: 2 5/8 IN. ID 508-4510948-147 (80064) MANUFACTURE FROM:	C	EA	35									163	10
N PCOZZ	4720-287-4837	HOSE, FLEXIBLE, 2 5/8 IN. ID, AS REQUIRED ZZH28TYPE3GRADEBCLASS20RS (81348)		FT		•	•	•	•	•	•			163	
N MOOZZ		TUBE, COPPER: 2 5/8 IN. OD 508-4510948-140 (80064) MANUFACTURE FROM:	C	EA	1									163	11
N PAOZZ	4710-278-2223	TUBE, COPPER, 2 5/8 IN. OD, AS REQUIRED WWT799TYPEKFORM1 (81436)		FT		•	•	•	•	•	•			163	
N MOOZZ		TUBE, STEEL: 2 5/8 IN. OD 508-4510948-146 (80064) MANUFACTURE FROM:	C	EA	16									163	12
N PAOZZ	4710-006-1647	TUBE, STEEL, 2 5/8 IN. OD, AS REQUIRED QQT830ASEAMLESSCOBR (81348)		FT		•	•	•	•	•	•			163	
N MOOZZ		TUBE, COPPER: 2 5/8 IN. OD 508-4510948-138 (80064) MANUFACTURE FROM:	C	EA	1									163	13
N PAOZZ	4710-278-2223	TUBE, COPPER, 2 5/8 IN. OD, AS REQUIRED WWT799TYPEKFORM1 (81348)		FT		•	•	•	•	•	•			163	
N MOOZZ		TUBE, COPPER: 2 5/8 IN. OD 508-4510948-132 (80064) MANUFACTURE FROM:	C	EA	5									163	14
N PAOZZ	4710-278-2223	TUBE, COPPER, 3 5/8 IN. AS REQUIRED WWT799TYPEKFORM1 (81348)		FT		•	•	•	•	•	•			163	
N MOOZZ		TUBE, COPPER: 2 5/8 IN. OD 508-4510948-130 (80064) MANUFACTURE FROM:	C	EA	4									163	15
N PAOZZ	4710-278-2223	TUBE, COPPER, 2 5/8 IN. OD, AS REQUIRED WWT799TYPEKFORM1 (81348)		FT		•	•	•	•	•	•			163	
N PAOZZ		ADAPTER, SLEEVE: NEOPRENE, 2 1/2 IN. 2114 (34749)	C	EA	13	•	•	•	•	•	•	•	•	163	16
N PAOZZ		COUPLING, COMPRESSION 210-2-7-8IN (34749)	C	EA	7	•	•	•	•	•	•	•	•	163	17
N MOOZZ		TUBE, COPPER: 2 5/8 IN. OD 508-4510948-142 (80064) MANUFACTURE FROM:	C	EA	7									163	18
N PAOZZ	4710-278-2223	TUBE, COPPER, 2 5/8 IN. OD, AS REQUIRED WWT799TYPEKFORM1 (81348)		FT		•	•	•	•	•	•			163	
N PAOZZ	4730-722-3591	ADAPTER, COPPER: TUBE PD15101-2-1-2IN (74163)	C	EA	19	•	•	•	•	•	•	•	•	163	19
N PAOZZ	4820-899-5730	VALVE, GLOBE: 125 NO., 2 1/2 IN. 1 (14959)	C	EA	7	•	•	•	•	•	•	•	•	163	20

(1)	(2)	(3)	(4)	(5)	(6)			(7)			(8)	(9)	(10)	
					30-DAY DS MAINT ALLOWANCE			30-DAY GS MAINT ALLOWANCE					ILLUS TRATI	
SMR CODE	FEDERAL STOCK NUMBER	DESCRIPTION REF NUMBER & MFR CODE	USABLE ON CODE	UNIT OF MEAS	QTY INC IN UNIT	(a) 1-20	(b) 21-50	(c) 51-100	(a) 1-20	(b) 21-50	(c) 51-100	1-YR ALW PER 100 EQUIP CNTGY	DEPOT MAINT ALW PER 100 EQUIP	(a) FIG. NO.	
N PAOZZ	4730-821-9812	ADAPTER: FITTING TO MALE THREADS, 2 IN. WC404-2IN (41947)	C	EA	1	*	*	*	*	*	*	*	*		
N PACZZ	4730-909-8627	CLAMP, HOSE: HI TORQUE, 2 5/8 IN. 36HS (66295)	C	EA	8	*	*	*	*	*	*	*	*		
N PAOZZ		VALVE, GLOBE: ANGLE, NO. 125, 2 1/2 IN. 2-2-1-2IN (14959)	C	EA	1	*	*	*	*	*	*	*	*		
N PAOZZ		COUPLING, HALF: SCREWED 2119-2-1-2IN (26403)	C	EA	1	*	*	*	*	*	*	*	*		
N PAOZZ		NIPPLE, PIPE: 2 1/2 X 3 IN. LG 2-1-2INX3INLG (26403)	C	EA	2	*	*	*	*	*	*	*	*		
N PAOZZ	4730-880-7377	UNION, SCREWED: 150 NO., 2 1/2 IN. 3477 (63686)	C	EA	1	*	*	*	*	*	*	*	*		
N XDOZZ		CLAMP, PIPE: 4 IN. 216 (26403)	C	EA	2										
N MOOZZ		GASKET, NEOPRENE: 1/16 IN. THK 508-4510948-52A (80064) MANUFACTURE FROM:		EA	1										
N PCOZZ	5330-505-6611	GASKET, 1/16 IN. THK, AS REQUIRED MILR3065GRADESC614-4ABEF (81349)		SH		*	*	*	*	*	*				
N PAOZZ	4730-797-7983	UNION, COPPER: TUBE A11240 (41967)	C	EA	2	*	*	*	*	*	*	*	*		
N PACZZ	4730-908-6292	CLAMP, HOSE 48HS2-1-2IN (66295)	C	EA	4	*	*	*	*	*	*	*	*		
N XDOZZ		NIPPLE, PIPE: IPS STD, THREADED 2-1-2INX5INLG (63686)	C	EA	1										
N PAOZZ		VALVE, GATE: SCREWED, NO. 125 428-2-1-2IN (14959)	C	EA	1	*	*	*	*	*	*	*	*		
N XDOZZ		BUSHING, REDUCING: SCREWED, NO. 125 3428-3-4X1-2IN (63686)	C	EA	1										
N XDOZZ		NIPPLE, CLOSE PIPE 2-1-2INIPSSTD (63686)	C	EA	1										
N XDOZZ		NIPPLE, PIPE: LONG 2-1-2INX6INLG (63686)	C	EA	1										
N PAOZZ	4730-375-7861	ELBOW: STREET: 90 DEG, TYPE F-C L.R, 2 IN. PD15-272-2IN (74163)	C	EA	1	*	*	*	*	*	*	*	*		
N XDOZZ		ELBOW, STREET: 90 DEG 3409-1-2IN (63686)	C	EA	1										
N PAOZZ	4730-982-9583	UNION: C-C C107-2IN (41947)	C	EA	1	*	*	*	*	*	*	*	*		
N PAOZZ	4730-900-2663	ELBOW, STREET: 90 DEG PD15-254-2IN (74163)	C	EA	1	*	*	*	*	*	*	*	*		
N PAOZZ	4820-922-0192	VALVE, ANGLE: STOP CHECK, SCREWED 135-2IN (48422)	C	EA	1	*	*	*	*	*	*	*	*		
N PAOZZ	4730-838-9762	ELBOW, STREET: 90 DEG, SEAMLESS, COPPER PD15-254-1-1-2IN (74163)	C	EA	2	*	*	*	*	*	*	*	*		
N XDOZZ		ELBOW, STREET: 1/2 IN., 90 DEG, SCREWED, NO. 125 3409 (63686)	C	EA	2										
N XDOZZ		ELBOW: 1 1/2 IN., 90 DEG, L.R SOLID, TYPE C-C PD15-242 (74163)	C	EA	2										

(1) SMR CODE	(2) FEDERAL STOCK NUMBER	(3) DESCRIPTION REF NUMBER & MFR CODE	USABLE ON CODE	(4) UNIT OF MEAS	(5) QTY INC IN UNIT	(6) 30-DAY DS MAINT ALLOWANCE (a) 1-20	(b) 21-50	(c) 51-100	(7) 30-DAY GS MAINT ALLOWANCE (a) 1-20	(b) 21-50	(c) 51-100	(8) 1-YR ALW PER 100 EQUIP CNTGY	(9) DEPOT MAINT ALW PER 100 EQUIP	(10) ILLUSTRATION (a) FIG. NO.	(b) ITEM NO.
MOOZZ		HOSE, RUBBER: 2 3/8 IN. 38093-210 (26571) MANUFACTURE FROM:	AB	EA	1										
PCOZZ	4720-235-4121	HOSE, AS REQUIRED		FT		•	•	•	•	•	•				
MOOZZ		HOSE, RUBBER: 2 3/8 IN. 38094-210 (26571) MANUFACTURE FROM:	AB	EA	1										
PCOZZ	4720-235-4121	HOSE, AS REQUIRED		FT		•	•	•	•	•	•				
MOOZZ		HOSE, RUBBER: 1 5/8 IN. 38095-210 (26571) MANUFACTURE FROM:	B	EA	1										
PCOZZ	4720-235-4127	HOSE, AS REQUIRED		FT		•	•	•	•	•	•				
		GROUP 86 - PUMP, BILGE													
PBOHH	4320-595-3333	PUMP, BILGE: MONEL IMPELLER SHAFT 23127 (76122) (INCLUDES SAME COMPONENTS AS PUMP, FSN 4320-116-9719, EXCEPT WHERE ANNOTATED)	AB	EA	1	•	•	•	•	•	•	•	•	16A	
PBOHH	4320-116-9719	PUMP, BILGE: MONEL IMPELLER SHAFT 23173 (76122)	AB	EA	1	•	•	•	•	•	•	•	•	16A	
XDOZZ		NUT, PLAIN, HEXAGON: SHAFT END 21176 (76122)	AB	EA	2									16A	1
XDOZZ		PULLEY ASSEMBLY: SHAFT 21194 (76122)	AB	EA	2									16A	2
PAOZZ	5305-591-2692	SCREW, CAP, FILLISTER HEAD: PULLEY 154 (76122)	AB	EA	4	•	•	•	•	•	•	•	•	16A	3
XDOZZ		NUT, LOCK: PULLEY 21191 (76122)	AB	EA	4									16A	4
PAOZZ	5310-367-1812	WASHER, LOCK: PULLEY 21192 (76122)	AB	EA	4	•	•	•	•	•	•	•	•	16A	5
XAOZZ		FLANGE 158 (76122)	AB	EA	2									16A	6
XAOZZ		PULLEY 157 (76122)	AB	EA	2									16A	7
XDOZZ		SCREW, MACHINE: RH, BEARING RETAINER 136 (76122)	AB	EA	8									16A	8
XDOZZ		WASHER, LOCK: BEARING RETAINER 2157 (76122)	AB	EA	8									16A	9
XDOZZ		RETAINER, BEARING 21142 (76122)	AB	EA	2									16A	10
PAOZZ	3110-004-3439	BEARING, BALL: SHAFT 21159 (76122)	AB	EA	2	•	•	•	•	•	•	•	•	16A	11
PAOZZ	4320-363-7364	SHIM: HOUSING 119 (76122)	AB	EA	2	•	•	•	•	•	•	•	•	16A	12
PAOZZ	4320-591-2684	SLINGER: PUMP SHAFT 187 (76122)	AB	EA	2	•	•	•	•	•	•	•	•	16A	13
XDOZZ		CUP, GREASE MS35758-8 (96906)	AB	EA	2									16A	14
XDOZZ		NUT, PLAIN, HEXAGON: PACKING GLAND 21244 (76122)	AB	EA	4									16A	15

(1) SMR CODE	(2) FEDERAL STOCK NUMBER	(3) DESCRIPTION REF NUMBER & MFR CODE	USABLE ON CODE	(4) UNIT OF MEAS	(5) QTY INC IN UNIT	(6) 30-DAY DS MAINT ALLOWANCE (a) 1-20	(b) 21-50	(c) 51-100	(7) 30-DAY GS MAINT ALLOWANCE (a) 1-20	(b) 21-50	(c) 51-100	(8) 1-YR ALW PER 100 EQUIP QNTTY	(9) DEPOT MAINT ALW PER 100 EQUIP	(10) ILLUSTRATION (a) FIG. NO.	(b) ITEM NO.
XDOZZ		LOCK, SPRING: PACKING GLAND NUT 21189 (76122)	AB	EA	2									16A	16
XDOZZ		RETAINER, PACKING 21140 (76122)	AB	EA	2									16A	17
PCOZZ		PACKING SET: SERVICE 21153 (76122)	AB	EA	2	•	•	•	•	•	•	•	•	16A	18
PCOZZ	5330-591-2710	PACKING SET: OVERHAUL 152 (76122)	AB	EA	2	•	•	•	•	•	•	•	•	16A	19
PAOZZ	5307-248-7333	STUD, PLAIN: PACKING GLAND 112 (76122)	AB	EA	4	•	•	•	•	•	•	•	•	16A	20
PAOZZ	5310-591-2596	NUT, PLAIN, HEXAGON: HOUSING 21284 (76122)	AB	EA	12	•	•	•	•	•	•	•	•	16A	20
PAOZZ	5310-591-2694	WASHER, FLAT: HOUSING 21184 (76122)	AB	EA	12	•	•	•	•	•	•	•	•	16A	21
XAOZZ		HOUSING ASSEMBLY A133 (76122) (U/O PUMP, FSN 4320-595-3333, ONLY)	AB	EA	1									16A	22
XAOZZ		HOUSING ASSEMBLY A132 (76122) (U/O PUMP, FSN 4320-116-9719, ONLY)	AB	EA	1									16A	22
XAOZZ		HOUSING 22929 (76122) (U/O PUMP, FSN 4320-116-9719, ONLY)	AB	EA	1									16A	23
XAOZZ		HOUSING 22931 (76122) (U/O PUMP, FSN 4320-595-3333, ONLY)	AB	EA	1									16A	23
PAOZZ	5307-206-1459	STUD, PLAIN: HOUSING 21150 (76122)	AB	EA	12	•	•	•	•	•	•	•	•	16A	24
PAOZZ	4730-287-2889	PLUG, DRAIN: HOUSING 146 (76122)	AB	EA	2	•	•	•	•	•	•	•	•	16A	25
PCOZZ	4320-034-3868	GASKET SET: PUMP 109A (76122)	AB	EA	2	•	•	•	•	•	•	•	•	16A	26
PAOZZ	4320-168-0892	SHAFT AND IMPELLER ASSEMBLY 23071 (76122) (U/O PUMP, FSN 4320-116-9719, ONLY)	AB	EA	1	•	•	•	•	•	•	•	•	16A	27
PAOZZ	4320-063-7471	SHAFT AND IMPELLER ASSEMBLY 23072 (76122) (U/O PUMP, FSN 4320-595-3333, ONLY)	AB	EA	1	•	•	•	•	•	•	•	•	16A	27
PAOZZ	5315-221-7229	PIN, STRAIGHT 128 (76122)	AB	EA	2	•	•	•	•	•	•	•	•	16A	28
XAOZZ		IMPELLER, SHAFT 21179 (76122) (U/O PUMP, FSN 4320-116-9719, ONLY)	AB	EA	1									16A	29
XAOZZ		IMPELLER, SHAFT 21180 (76122) (U/O PUMP, FSN 4320-595-3333, ONLY)	AB	EA	1									16A	29
XAOZZ		SHAFT, DRIVE M108 (76122)	AB	EA	2									16A	30
XDOZZ		KEY, WOODRUFF: SHAFT 129 (76122)	AB	EA	2									16A	31
XAOZZ		BODY ASSEMBLY A101 (76122)	AB	EA	2									16A	32
PAOZZ	3120-661-5787	BEARING, SLEEVE SHAFT 115 (76122)	AB	EA	2	•	•	•	•	•	•	•	•	16A	33
XAOZZ		BODY 22920 (76122)	AB	EA	2									16A	34

(1) SMR CODE	(2) FEDERAL STOCK NUMBER	(3) DESCRIPTION REF NUMBER & MFR CODE	USABLE ON CODE	(4) UNIT OF MEAS	(5) QTY INC IN UNIT	(6) 30-DAY DS MAINT ALLOWANCE (a) 1-20	(b) 21-50	(c) 51-100	(7) 30-DAY GS MAINT ALLOWANCE (a) 1-20	(b) 21-50	(c) 51-100	(8) 1-YR ALW PER 100 EQUIP CNTGY	(9) DEPOT MAINT ALW PER 100 EQUIP	(10) ILLUSTRATION (a) FIG. NO.	(b) ITEM NO.
PCCZZ	3030-460-2502	BELT, V: PUMP DRIVE MS39256858 (96906)	B	EA	2	*	*	*	*	*	*	*	*	165	1
PBOHH	4320-116-9720	PUMP, BILGE 23129 (76122) (INCLUDES SAME COMPONENTS AS PUMP, FSN 4320-391-9524, EXCEPT WHERE ANNOTATED)	A	EA	1	*	*	*	*	*	*	*	*	165	
PBOHH	4320-391-9524	PUMP, BILGE 23178 (76122)	B	EA	1	*	*	*	*	*	*	*	*	165	
XDOZZ		NUT, PLAIN, HEXAGON: SHAFT 21228 (76122)	AB	EA	2									165	2
XDOZZ		PULLEY, DRIVE 2170 (76122)	AB	EA	2									165	3
PAOZZ	5305-367-1806	SCREW, CAP, ROUNDHEAD: BEARING RETAINER 236 (76122)	AB	EA	8	*	*	*	*	*	*	*	*	165	4
PAOZZ	5310-367-1812	WASHER, LOCK: BEARING RETAINER 21192 (76122)	AB	EA	8	*	*	*	*	*	*	*	*	165	5
XDOZZ		RETAINER, BEARING 21210 (76122)	AB	EA	2									165	6
PAOZZ	3110-156-3521	BEARING, BALL: SHAFT 21225 (76122)	AB	EA	2	*	*	*	*	*	*	*	*	165	7
PAOZZ	5310-367-1799	NUT, PLAIN, HEXAGON: PACKING GLAND 239 (76122)	AB	EA	16	*	*	*	*	*	*	*	*	165	8
PAOZZ	5310-262-3608	WASHER, SPRING: PACKING GLAND 21219 (76122)	AB	EA	4	*	*	*	*	*	*	*	*	165	9
XDOZZ		GLAND, PACKING 21208 (76122)	AB	EA	2									165	10
PAOZZ	5340-367-1808	SHIM, HOUSING 219 (76122)	AB	EA	2	*	*	*	*	*	*	*	*	165	11
PAOZZ	4320-591-2679	SLINGER, PACKING GLAND 21236 (76122)	AB	EA	2	*	*	*	*	*	*	*	*	165	12
PCOZZ	4320-367-1801	PACKING SET: SERVICE, 4 PER SET 21220 (76122)	AB	EA	2	*	*	*	*	*	*	*	*	165	13
PCOZZ	5330-591-2709	PACKING, SOLID 252 (76122)	AB	EA	2	*	*	*	*	*	*	*	*	165	14
PAOZZ	5305-591-2690	STUD, PLAIN: PACKING GLAND 4512 (76122)	AB	EA	4	*	*	*	*	*	*	*	*	165	15
PAOZZ	5310-558-6882	WASHER, FLAT: HOUSING 21233 (76122)	AB	EA	12	*	*	*	*	*	*	*	*	165	16
XDOZZ		CUP, GREASE MS35758-8 (96906)	AB	EA	2									165	17
XAOZZ		BODY ASSEMBLY A201 (76122)	AB	EA	2									165	18
PAOZZ	2040-367-1793	BEARING, SLEEVE: SHAFT 21221 (76122)	AB	EA	1	*	*	*	*	*	*	*	*	165	19
XAOZZ		BODY 22934 (76122)	AB	EA	2									165	20
PAOZZ	5315-591-2697	KEY, PULLEY 6111 (76122)	AB	EA	2	*	*	*	*	*	*	*	*	165	21
PAOZZ	4320-235-1663	SHAFT AND IMPELLER ASSEMBLY 23074 (76122) (U/O PUMP, FSN 4320-116-9720, ONLY)	A	EA	1	*	*	*	*	*	*	*	*	165	22
PAOZZ	4320-073-1843	SHAFT AND IMPELLER 23073 (76122) (U/O PUMP, FSN 4320-319-9524, ONLY)	B	EA	1	*	*	*	*	*	*	*	*	165	22

(1) SMR CODE	(2) FEDERAL STOCK NUMBER	(3) DESCRIPTION REF NUMBER & MFR CODE	USABLE ON CODE	(4) UNIT OF MEAS	(5) QTY INC IN UNIT	(6) 30-DAY DS MAINT ALLOWANCE (a) 1-20	(b) 21-50	(c) 51-100	(7) 30-DAY GS MAINT ALLOWANCE (a) 1-20	(b) 21-50	(c) 51-100	(8) 1-YR ALW PER 100 EQUIP CNTGY	(9) DEPOT MAINT ALW PER 100 EQUIP	(10) ILLUSTRATION (a) FIG. NO.	(b) ITEM NO.
PAOZZ	5315-367-1802	PIN 228 (76122)	AB	EA	2	•	•	•	•	•	•	•	•	165	23
XAOZZ		IMPELLER 240 (76122) (U/O PUMP, FSN 4320-116-9720, ONLY)	A	EA	1									165	24
XAOZZ		IMPELLER 204 (76122) (U/O PUMP, FSN 4320-319-9524, ONLY)	B	EA	1									165	24
XAOZZ		SHAFT 208 (76122) (U/O PUMP, FSN 4320-116-9720, ONLY)	A	EA	1									165	25
XAOZZ		SHAFT 208M (76122) (U/O PUMP, FSN 4320-391-9524, ONLY)	B	EA	1									165	25
PCOZZ	5330-202-1981	GASKET: HOUSING 209A (76122)	AB	EA	4	•	•	•	•	•	•	•	•	165	26
XAOZZ		HOUSING ASSEMBLY 22838 (76122) (U/O PUMP, FSN 4320-116-9720, ONLY)	A	EA	1									165	27
XAOZZ		HOUSING ASSEMBLY A202 (76122) (U/O PUMP, FSN 4320-391-9524, ONLY)	B	EA	1									165	27
PAOZZ	5307-367-1809	STUD, PLAIN: HOUSING 21260 (76122)	C	EA	6	•	•	•	•	•	•	•	•	165	28
XAOZZ		HOUSING 203 (76122) (U/O PUMP, FSN 4320-116-9720, ONLY)	A	EA	1									165	29
XAOZZ		HOUSING 22936 (76122) (U/O PUMP, FSN 4320-391-9524, ONLY)	B	EA	1									165	29
PAOZZ	4730-278-3001	PLUG, PIPE: HOUSING DRAIN 21267 (76122)	AB	EA	2	•	•	•	•	•	•	•	•	165	30
N PBOHH	4320-937-1115	PUMP, BILGE: AH 24571 (76122)	C	EA	1	•	•	•	•	•	•	•	•	166	
N PAOZZ	4730-278-3001	PLUG, DRAIN 21267 (76122)	C	EA	1	•	•	•	•	•	•	•	•	166	1
N PAOZZ	5310-367-1799	NUT, PLAIN, HEXAGON: HOUSING TO BODY 21268 (76122)	C	EA	6	•	•	•	•	•	•	•	•	166	2
N PAOZZ	5310-558-6882	WASHER, FLAT: HOUSING TO BODY 21233 (76122)	C	EA	6	•	•	•	•	•	•	•	•	166	3
N PAOZZ	5315-982-1988	PIN, COTTER: CLUTCH LEVER HANDLE 21507 (76122)	C	EA	1	•	•	•	•	•	•	•	•	166	4
N PAOZZ	4320-922-0198	SHAFT, CLUTCH HANDLE 21679 (76122)	C	EA	1	•	•	•	•	•	•	•	•	166	5
N PAOZZ	3040-922-0277	LEVER, CLUTCH 21673 (76122)	C	EA	1	•	•	•	•	•	•	•	•	166	6
N XDOZZ		NUT, HEXAGON: SHAFT 21125 (76122)	C	EA	1									166	7
N XDOZZ		CLAMP, WASHER: REAR BEARING 21697 (76122)	C	EA	1									166	8
N XDOZZ		SNAP RING: FRONT BEARING 21695 (76122)	C	EA	2									166	9
N PAOZZ	3110-193-0632	BALL, BEARING 21225 (76122)	C	EA	2	•	•	•	•	•	•	•	•	166	10
N PAOZZ	5365-003-4161	SPACER, REAR BEARING 21696 (76122)	C	EA	1	•	•	•	•	•	•	•	•	166	11

best copy available

(1) SMR CODE	(2) FEDERAL STOCK NUMBER	(3) DESCRIPTION REF NUMBER & MFR CODE	USABLE ON CODE	(4) UNIT OF MEAS	(5) QTY INC IN UNIT	(6) 30-DAY DS MAINT ALLOWANCE (a) 1-20	(b) 21-50	(c) 51-100	(7) 30-DAY GS MAINT ALLOWANCE (a) 1-20	(b) 21-50	(c) 51-100	(8) 1-YR ALW PER 100 EQUIP CNTGY	(9) DEPOT MAINT ALW PER 100 EQUIP	(10) ILLUSTRATION (a) FIG. NO.	(b) ITEM NO.
H PAOZZ	5360-926-0118	LOCK, SPRING 22945 (76122)	C	EA	1	•	•	•	•	•	•	•	•	166	12
H PAOZZ	4320-922-0194	CLUTCH ASSEMBLY 21691 (76122)	C	EA	1	•	•	•	•	•	•	•	•	166	
H XDOZZ		ADJUSTING NUT 22942 (76122)	C	EA	1									166	13
PAOZZ	5310-558-6882	WASHER, FLAT: CLUTCH 21233 (76122)	C	EA	1	•	•	•	•		•	•	•	166	14
H PAOZZ	4320-922-0195	CLUTCH ASSEMBLY 21668 (76122)	C	EA	1	•	•	•	•	•	•	•	•	166	
H XAOZZ		COLLAR ASSEMBLY 22968 (76122)	C	EA	1									166	15
H PAOZZ	3040-922-0276	LEVER 21723 (76122)	C	EA	6	•	•	•	•	•	•	•	•	166	16
H PAOZZ	4320-937-1136	ROLLERS, LEVER 22940 (76122)	C	EA	9	•	•	•	•	•	•	•	•	166	17
H PAOZZ	5315-926-0119	KEY 23075 (76122)	C	EA	1	•	•	•	•	•	•	•	•	166	18
H PAOZZ	4320-922-0197	PRESSURE PLATE ASSEMBLY: HARDENED 22944 (76122)	C	EA	1	•	•	•	•	•	•	•	•	166	19
H PAOZZ	3110-156-3576	BEARING 21662 (76122)	C	EA	1	•	•	•	•	•	•	•	•	166	20
H XDOZZ		PULLEY 21694 (76122)	C	EA	1									166	21
H PAOZZ	4320-922-0196	PRESSURE PLATE ASSEMBLY 22943 (76122)	C	EA	1	•	•	•	•	•	•	•	•	166	22
H XDOZZ		HUB: SHORT 21693 (76122)	C	EA	1									166	23
H XDOZZ		HUB: LONG 21692 (76122)	C	EA	1									166	24
H XDOZZ		ADJUSTING NUT SCREW 22941 (76122)	C	EA	1										
PAOZZ	5310-367-1799	NUT, PLAIN, HEXAGON: PACKING GLAND 21268 (76122)		EA	2	•	•	•	•	•	•	•	•	166	
H PAOZZ	5310-262-3608	WASHER, LOCK: PACKING GLAND 21219 (76122)	C	EA	2	•	•	•	•	•	•	•	•	166	26
H PAOZZ	5340-367-1808	SHIM 21224 (76122)	C	EA	1	•	•	•	•	•	•	•	•	166	27
H PAOZZ	4320-591-2679	SLINGER 21236 (76122)	C	EA	1	•	•	•	•	•	•	•	•	166	28
H XDOZZ		PACKING, GLAND 21208 (76122)	C	EA	1									166	29
H PCOZZ	5330-367-1801	PACKING, SERVICE 21220 (76122)	C	EA	1	•	•	•	•	•	•	•	•	166	30
H PAOZZ	5330-591-2709	PACKING, SOLID 21234 (76122)	C	EA	2	•	•	•	•	•	•	•	•	166	31
H PAOZZ	5307-206-4044	STUD, PACKING GLAND 21261 (76122)	C	EA	2	•	•	•	•	•	•	•	•	166	32
H XDOZZ		KEY 21678 (76122)	C	EA	1									166	33
H XDOZZ		BODY, PUMP BASE 21685 (76122)	C	EA	1									166	34
H PAOZZ	4320-937-0986	SHAFT AND IMPELLER ASSEMBLY 24572 (76122)	C	EA	1	•	•	•	•	•	•	•	•	166	

	(1) SMR CODE	(2) FEDERAL STOCK NUMBER	(3) DESCRIPTION — REF NUMBER & MFR CODE	USABLE ON CODE	(4) UNIT OF MEAS	(5) QTY INC IN UNIT	(6) 30-DAY OS MAINT ALLOWANCE (a) 1-30	(b) 31-99	(c) 31-100	(7) 30-DAY OS MAINT ALLOWANCE (a) 1-30	(b) 31-99	(c) 31-100	(8) 1-YR ALW PER 100 EQUIP CNTGY	(9) DEPOT MAINT ALW PER 100 EQUIP	(10) ILLUSTRATION (a) FIG. NO.	(b) ITEM NO.
N	PAOZZ	5315-367-1802	PIN 21226 (76122)	C	EA	1	•	•	•	•	•	•	•	•	166	35
N	XAOZZ		IMPELLER 21207 (76122)	C	EA	1									166	36
N	XAOZZ		SHAFT, MONEL 26187 (76122)	C	EA	1									166	37
N	PCOZZ	4320-218-2311	GASKET: BODY TO HOUSING 21216 (76122)	C	EA	1	•	•	•	•	•	•	•	•	166	38
N	XAOZZ		HOUSING ASSEMBLY: RH 22936 (76122)	C	EA	1									166	39
N	PAOZZ	5307-367-1809	STUD 21260 (76122)	C	EA	6	•	•	•	•	•	•	•	•	166	40
N	XAOZZ		HOUSING M6024 (76122)	C	EA	1									166	
N	PBOYH	4320-922-0199	PUMP, BILGE: LH 24213 (76122) (COMPONENTS SAME AS PUMP, P/N 24214 (76122), EXCEPT WHERE INDIVIDUAL COMPONENTS ARE ANNOTATED)	C	EA	1	•	•	•	•	•	•	•	•	167	
N	PBOHH	4320-922-0204	PUMP, BILGE: RH 24214 (76122)	C	EA	1	•	•	•	•	•	•	•	•	167	
N	PAOZZ	4730-287-2889	PLUG, PIPE: HOUSING DRAIN 21185 (76122)	C	EA	1	•	•	•	•	•	•	•	•	167	1
N	PAOZZ	5310-591-2696	NUT, PLAIN, HEXAGON: BODY TO HOUSING 139 (76122)	C	EA	6	•	•	•	•	•	•	•	•	167	2
N	PAOZZ	5310-591-2694	WASHER, LOCK: BODY TO HOUSING 21184 (76122)	C	EA	6	•	•	•	•	•	•	•	•	167	3
N	XBOZZ		PIN, COTTER: CLUTCH LEVER 21507 (76122)	C	EA	1									167	4
N	XDOZZ		SHAFT: CLUTCH LEVER 21679 (76122)	C	EA	1									167	5
N	XDOZZ		LEVER, CLUTCH 21673 (76122)	C	EA	1									167	6
N	XDOZZ		NUT, HEXAGON: SHAFT 21125 (76122)	C	EA	1									167	7
N	XDOZZ		CLAMP, WASHER: REAR BEARING 21677 (76122)	C	EA	1									167	8
N	PAOZZ	5365-003-4145	SNAP RING: FRONT BEARING 21675 (76122)	C	EA	2	•	•	•	•	•	•	•	•	167	9
N	PAOZZ	3110-156-3502	BALL BEARING 21159 (76122)	C	EA	2	•	•	•	•	•	•	•	•	167	10
N	PAOZZ	5365-003-4160	SPACER: REAR BEARING 21676 (76122)	C	EA	1	•	•	•	•	•	•	•	•	167	11
N	PAOZZ	4320-936-3885	CLUTCH ASSEMBLY 21669 (76122)	C	EA	1	•	•	•	•	•	•	•	•	167	
N	XDOZZ		LOCK, SPRING 22945 (76122)	C	EA	1									167	12
N	XDOZZ		ADJUSTING NUT 22942 (76122)	C	EA	1									167	13
N	PAOZZ	5310-558-6882	WASHER, PLAIN 21233 (76122)	C	EA	2	•	•	•	•	•	•	•	•	167	14
N	PAOZZ	4320-922-0195	CLUTCH ASSEMBLY 21668 (76122)	C	EA	1	•	•	•	•	•	•	•	•	167	
N	XAOZZ		COLLAR ASSEMBLY 22968 (76122)	C	EA	1									167	15

(1) SMR CODE	(2) FEDERAL STOCK NUMBER	(3) DESCRIPTION — REF NUMBER & MFR CODE	USABLE ON CODE	(4) UNIT OF MEAS	(5) QTY INC IN UNIT	(6) 30-DAY DS MAINT ALLOWANCE (a) 1-30	(b) 31-90	(c) 91-180	(7) 30-DAY GS MAINT ALLOWANCE (a) 1-30	(b) 31-90	(c) 91-180	(8) 1-YR ALW PER 100 EQUIP QNTTY	(9) DEPOT MAINT ALW PER 100 EQUIP	(10) ILLUSTRATION (a) FIG. NO.	(b) ITEM NO.
XDOZZ		LEVERS 21723 (76122)	C	EA	6									167	16
XDOZZ		ROLLERS 22940 (76122)	C	EA	9									167	17
XDOZZ		KEY 23075 (76122)	C	EA	1									167	18
PAOZZ	k320-922-0197	PRESSURE PLATE ASSEMBLY: HARDENED 22944 (76122)	C	EA	1	•	•	•	•	•	•	•	•	167	19
PAOZZ	3110-156-3576	BEARING 21662 (76122)	C	EA	1	•	•	•	•	•	•	•	•	167	20
XDOZZ		PULLEY 21670 (76122)	C	EA	1									167	21
PAOZZ	k320-922-0196	PRESSURE PLATE ASSEMBLY 22943 (76122)	C	EA	1	•	•	•	•	•	•	•	•	167	22
XDOZZ		HUB: SHORT 21672 (76122)	C	EA	1									167	23
XDOZZ		HUB: LONG 21671 (76122)	C	EA	1									167	24
XDOZZ		ADJUSTING NUT SCREW 22941 (76122)	C	EA	1									167	
PAOZZ	k320-363-736k	SHIM 21157 (76122)	C	EA	1	•	•	•	•	•	•	•	•	167	25
PAOZZ	5310-591-2695	NUT, PLAIN, HEXAGON: PACKING GLAND 21244 (76122)	C	EA	2	•	•	•	•	•	•	•	•	167	26
PAOZZ	k320-168-089k	NUT, LOCK: PACKING GLAND 21189 (76122)	C	EA	1	•	•	•	•	•	•	•	•	167	27
PAOZZ	k310-591-268k	SLINGER 21198 (76122)	C	EA	1	•	•	•	•	•	•	•	•	167	28
XDOZZ		PACKING, GLAND 21140 (76122)	C	EA	1									167	29
PCOZZ	5330-916-k30k	PACKING, SERVICE 21153 (76122)	C	EA	1	•	•	•	•	•	•	•	•	167	30
PCOZZ	5330-591-2710	PACKING, SET, OVERHAUL 21188 (76122)	C	EA	1	•	•	•	•	•	•	•	•	167	31
PAOZZ	5307-003-0709	STUD, PACKING GLAND 21751 (76122)	C	EA	2	•	•	•	•	•	•	•	•	167	32
XDOZZ		BODY 21661 (76122)	C	EA	1									167	33
XDOZZ		KEY 21678 (76122)	C	EA	1									167	34
PAOZZ	k320-071-1982	SHAFT AND IMPELLER ASSEMBLY 24217 (76122) (U/O PUMP, P/N 24213 (76122), ONLY)	C	EA	1	•	•	•	•	•	•	•	•	167	
PAOZZ	k320-078-2501	SHAFT AND IMPELLER ASSEMBLY 24216 (76122) (U/O PUMP, P/N 24214 (76122), ONLY)	C	EA	1	•	•	•	•	•	•	•	•	167	
PAOZZ	5315-221-7829	PIN 21161 (76122)	C	EA	1	•	•	•	•	•	•	•	•	167	35
XAOZZ		IMPELLER 21150 (76122) (U/W SHAFT, FSN k320-071-1982, ONLY)	C	EA	1									167	36
XAOZZ		IMPELLER 21174 (76122) (U/O SHAFT, FSN k320-078-2501, ONLY)	C	EA	1									167	36

(1) SMR CODE	(2) FEDERAL STOCK NUMBER	(3) DESCRIPTION REF NUMBER & MFR CODE	USABLE ON CODE	(4) UNIT OF MEAS	(5) QTY INC IN UNIT	(6) 30-DAY DS MAINT ALLOWANCE (a) 1-20	(b) 21-50	(c) 51-100	(7) 30-DAY GS MAINT ALLOWANCE (a) 1-20	(b) 21-50	(c) 51-100	(8) 1-YR ALW PER 100 EQUIP CNTGY	(9) DEPOT MAINT ALW PER 100 EQUIP	(10) ILLUSTRATION (a) FIG. NO.	(b) ITEM NO.
N XAOZZ		SHAFT, MONEL 21694 (76122)	C	EA	1									167	37
N PCOZZ	5330-034-3868	GASKET 21149 (76122)	C	EA	1	•	•	•	•	•	•	•	•	167	38
N XDOZZ		HOUSING ASSEMBLY 22929 (76122) (U/O PUMP, P/N 24214 (76122), ONLY)	C	EA	1									167	39
N XAOZZ		HOUSING 132 (76122) (U/O HOUSING, P/N 22929 (76122), ONLY)	C	EA	1									167	
N PAOZZ	5307-206-1459	STUD 21150 (76122)	C	EA	6	•	•	•	•	•	•	•	•	167	40
N XDOZZ		HOUSING ASSEMBLY 22931 (76122) (U/O PUMP, P/N 24213 (76122), ONLY)	C	EA	1									167	41
N XAOZZ		HOUSING 133 (76122) (U/W HOUSING, P/N 22931 (76122), ONLY)	C	EA	1										
PCCZZ	3030-529-0482	BELT, V: PUMP DRIVE MS39256842 (96906)	B	EA	1	•	•	•	•	•	•	•	•		
XDFZZ		FLANGE: BILGE LINE 107 (47040)	A	EA	2										
XDFZZ		FLANGE: BILGE LINE 108 (47040)	A	EA	1										
XDFZZ		FLANGE: BILGE LINE 109 (47040)	A	EA	1										
N PCCZZ	3030-180-2102	BELT, MATCHED SET: BILGE PUMP B42SET2 (24161)	C	EA	1	•	•	•	•	•	•	•	•		
		GROUP 87 - PUMP, HAND, BILGE													
PAOZZ	4320-244-9865	PUMP, HAND: BILGE MG1-4-12 (20252)		EA	1	•	•	•	•	•	•	•	•	168	1
XAOZZ		VALVE, HAND PUMP MG1-5 (20252)		EA	1									168	2
XDOZZ		PLUNGER, HAND PUMP MG1-7 (20252)		EA	1									168	3
		GROUP 88 - COMPASS SYSTEM													
N XDFDD		REMOTE MAGNETIC: HEADING SYSTEM 4008338-901 (07187)	C	EA	1									169	
N PAFDD	6605-106-9560	INDICATOR, REPEATER: HEADING 2593843-901 (07187)	C	EA	1	•	•	•	•	•	•	•	•	169	1
N PAFDD	6605-106-9562	TRANSMITTER, INDICATOR: COMPASS 2590057-901 (07187)	C	EA	1	•	•	•	•	•	•	•	•	169	2
N XDFZZ		CASE, TRANSMITTER 4010468 (07187)	C	EA	1									169	3
N PAFZZ		STUD, SELF-LOCKING 8248125BT32-310C (86577)	C	EA	3	•	•	•	•	•	•	•	•		
N XDFZZ		CABLE ASSEMBLY 4010445 (07187)	C	EA	1									169	4
N XDFZZ		CABLE ASSEMBLY: JUNCTION BOX TO CONTROL PANEL 4010446 (07187)		EA	1									169	5

(1) SMR CODE	(2) FEDERAL STOCK NUMBER	(3) DESCRIPTION REF NUMBER & MFR CODE	USABLE ON CODE	(4) UNIT OF MEAS	(5) QTY INC IN UNIT	(6) 30-DAY DS MAINT ALLOWANCE (a) 1-20	(b) 21-50	(c) 51-100	(7) 30-DAY GS MAINT ALLOWANCE (a) 1-20	(b) 21-50	(c) 51-100	(8) 1-YR ALW PER 100 EQUIP CNTGY	(9) DEPOT MAINT ALW PER 100 EQUIP	(10) ILLUSTRATION (a) FIG. NO.	(b) ITEM NO.
N XDFZZ		CABLE ASSEMBLY: JUNCTION BOX TO JUNCTION BOX A010A47 (07187)	C	EA	1									169	6
N XDFZZ		CABLE ASSEMBLY: TRANSMITTER TO JUNCTION BOX A010A48 (07187)	C	EA	1									169	7
N XDFZZ		BOX, TERMINAL 9000862027A018 (80009)	C	EA	2									169	8
N PAFZZ	5310-660-3381	NUT, SELF-LOCKING: TERMINAL BOX MTG, 5/16-24 THD SIZE MS21083N5 (96906)	C	EA	6	•	•	•	•	•	•	•	•	169	9
N PAFZZ	5310-625-5756	WASHER, FLAT: JUNCTION BOX MTG, 5/16 IN. ID MS15795-812 (96906)	C	EA	12	•	•	•	•	•	•	•	•	169	10
N PAFZZ	5310-849-6895	NUT, PLAIN, HEXAGON: TERMINAL BOX MTG, 5/16-24 THD SIZE MS21044D08 (96906)	C	EA	6	•	•	•	•	•	•	•	•	169	11
N PAFZZ	5306-021-3915	BOLT, MACHINE: JUNCTION BOX, 5/16-24 THD SIZE, 1 1/4 IN. LG MS35308-336 (96906) (WELDED TO BULKHEAD)	C	EA	6	•	•	•	•	•	•	•	•	169	12
N PAFZZ	5975-296-4092	STUFFING TUBE: JUNCTION BOX AND TRANSMITTER CASE M19622-1-001 (81349)	C	EA	6	•	•	•	•	•	•	•	•	169	13
N PCFZZ	5975-202-2585	PACKING ASSEMBLY: LAZARETTE BULKHEAD AND JUNCTION BOX M19622-16-0006 (81349)	C	EA	6	•	•	•	•	•	•	•	•	169	14
N PAFZZ	5975-296-4093	STUFFING TUBE: JUNCTION BOX M19622-1-002 (81349)	C	EA	1	•	•	•	•	•	•	•	•	169	15
N PCFZZ	5975-202-2586	PACKING ASSEMBLY: DECK MAST AND JUNCTION BOX M19622-17-01 (81349)	C	EA	3	•	•	•	•	•	•	•	•	169	16
N PAFZZ	5975-156-3253	STRAP, TIE DOWN MS3367-2-9 (96906)	C	EA	25	•	•	•	•	•	•	•	•	169	17
N PAFZZ	5310-941-6019	NUT, SELF-LOCKING: INDICATOR PLATE MTG, NO. 8-32 THD SIZE MS21083N08 (96906)	C	EA	12	•	•	•	•	•	•	•	•	169	18
N PAFZZ	5310-880-5978	WASHER, FLAT: INDICATOR PLATE MTG, NO. 8 SCREW SIZE MS15795-807 (96906)	C	EA	12	•	•	•	•	•	•	•	•	169	19
N PAFZZ	5305-054-6673	SCREW, MACHINE: INDICATOR PLATE MTG, NO. 8-32 THD SIZE, 7/8 IN. LG MS51957-48 (96906)	C	EA	12	•	•	•	•	•	•	•	•	169	20
N XDFZZ		PLATE, INDICATOR MTG A010A25 (07187)	C	EA	1									169	21
N PAFZZ	5340-815-4930	INSERT, SCREW: NO. 6-32 THD SIZE MS21209C0615 (96906)	C	EA	12	•	•	•	•	•	•	•	•		
N MFFZZ		GASKET: INDICATOR MTG PLATE A010A26 (07187) MANUFACTURE FROM:	C	EA	1									169	22
N PAFZZ	5330-290-7911	GASKET, SYNTHETIC, 1/16 IN. THK, AS REQUIRED HHG156 (81348)		SH		•	•	•	•	•	•			169	
N PAFZZ	5305-054-6654	SCREW, MACHINE: INDICATOR MTG, NO. 6-32 THD SIZE, 1/2 IN. LG MS51957-30 (96906)	C	EA	4	•	•	•	•	•	•	•	•	169	23
N PAFZZ	5310-722-5998	WASHER, FLAT: INDICATOR AND INDICATOR COVER MTG, NO. 6 SCREW SIZE MS15795-805 (96906)	C	EA	4	•	•	•	•	•	•	•	•	169	24

(1) SMR CODE	(2) FEDERAL STOCK NUMBER	(3) DESCRIPTION — REF NUMBER & MFR CODE	USABLE ON CODE	(4) UNIT OF MEAS	(5) QTY INC IN UNIT	(6) 30-DAY DS MAINT ALLOWANCE (a) 1-20	(b) 21-50	(c) 51-100	(7) 30-DAY DS MAINT ALLOWANCE (a) 1-20	(b) 21-50	(c) 51-100	(8) 1-YR ALW PER 100 EQUIP CNTGY	(9) DEPOT MAINT ALW PER 100 EQUIP	(10) ILLUSTRATION (a) FIG. NO.	(b) ITEM NO.
N PAFZZ	5305-059-8659	SCREW, MACHINE: INDICATOR COVER MTG, NO. 6-32 THD SIZE, 1 1/4 IN. LG MS51957-35 (96906)		EA	8	•	•	•	•	•	•	•	•	169	25
PAFZZ	5310-722-5998	WASHER, FLAT: INDICATOR COVER MTG MS15795-805 (96906)		EA	8	•	•	•	•	•	•	•	•	169	26
N PAFZZ	6605-106-9561	COVER, INDICATOR: PILOT CONTROL 4010A28 (07187)	C	EA	1	•	•	•	•	•	•	•	•	169	27
N MFFZZ		GASKET: INDICATOR COVER 4010A27 (07187) MANUFACTURE FROM:	C	EA	1									169	28
N PCFZZ	5330-290-7911	GASKET, SYNTHETIC, 1/16 IN., AS REQUIRED MMG156 (81348)		SH		•	•	•	•	•	•			169	
PAFZZ	5310-660-3381	NUT, SELF-LOCKING: BRACKET, 5/16-24 THD SIZE MS21083N5 (96906)	C	EA	3	•	•	•	•	•	•	•	•	169	29
PAFZZ	5310-625-5756	WASHER, FLAT: BRACKET, 5/16-24 THD SIZE MS15795-812 (96906)	C	EA	3	•	•	•	•	•	•	•	•	169	30
PAFZZ	5306-021-3915	BOLT, MACHINE: BRACKET MTG, 5/16-24 THD SIZE, 1 1/4 IN. LG MS35308-336 (96906)	C	EA	3	•	•	•	•	•	•	•	•	169	31
N XDFZZ		BRACKET, STOP MAST 4010A17 (07187)	C	EA	1									169	32
N XDFZZ		STOP, MAST 4010A18 (07187)	C	EA	1									169	33
N MFFZZ		GASKET: MAST STOP BRACKET 4010A19 (07187) MANUFACTURE FROM:	C	EA	1									169	34
N PCFZZ	5330-290-7911	GASKET, SYNTHETIC, 1/16 IN. THK, AS REQUIRED MMG156 (81348)		EA		•	•	•	•	•	•			169	
N PAFZZ	5305-059-8659	SCREW, MACHINE: TRANSMITTER CABLE AND COVER MTG, NO. 4-40 THD SIZE, 1/2 IN. LG MS35218-16 (96906)	C	EA	12	•	•	•	•	•	•	•	•	169	35
N PAFZZ	5310-045-5202	WASHER, FLAT: TRANSMITTER COVER AND BRACKET MTG, NO. 4 SCREW SIZE MS15795-903 (96906)	C	EA	12	•	•	•	•	•	•	•	•	169	36
N XDFZZ		COVER, ACCESS: TRANSMITTER 4010A10 (07187)	C	EA	1									169	37
N MFFZZ		GASKET: TRANSMITTER CASE COVER 4010A12 (07187) MANUFACTURE FROM:	C	EA	1									169	38
N PCFZZ	5330-290-7911	GASKET, SYNTHETIC, 1/16 IN. THK, AS REQUIRED MMG156 (81348)		SH		•	•	•	•	•	•			169	
N XDFZZ		BRACKET: TRANSMITTER MTG 4010A13 (07187)	C	EA	1									169	39
N PAFZZ	5310-282-7845	NUT, SELF-LOCKING: MAGNETIC TRANSMITTER BASE MTG MS2036505 (96906)	C	EA	3	•	•	•	•	•	•	•	•	169	40
N PAFZZ	5310-045-5212	WASHER, FLAT: TRANSMITTER BASE MTG, 5/16 IN. SCREW SIZE MS15795-912 (96906)	C	EA	3	•	•	•	•	•	•	•	•	169	41
N XDFZZ		SUPPORT, TRANSMITTER CASE 4010A11 (07187)	C	EA	1									169	42

(1) SMR CODE	(2) FEDERAL STOCK NUMBER	(3) DESCRIPTION REF NUMBER & MFR CODE	USABLE ON CODE	(4) UNIT OF MEAS	(5) QTY INC IN UNIT	(6) 30-DAY DS MAINT ALLOWANCE (a) 1-20	(b) 21-50	(c) 51-100	(7) 30-DAY GS MAINT ALLOWANCE (a) 1-20	(b) 21-50	(c) 51-100	(8) 1-YR ALW PER 100 EQUIP CNTGY	(9) DEPOT MAINT ALW PER 100 EQUIP	(10) ILLUSTRATION (a) FIG. NO.	(b) ITEM NO.
PAFZZ	5305-059-8671	SCREW, MACHINE: TRANSMITTER MTG PLATE, NO. 6-32 THD SIZE, 5/8 IN. LG MS35218-28 (96906)	C	EA	4	*	*	*	*	*	*	*	*	169	43
PAFZZ	5310-045-5203	WASHER, FLAT: TRANSMITTER MTG, NO. 6 SCREW SIZE MS15795-905 (96906)	C	EA	4	*	*	*	*	*	*	*	*	169	44
XDFZZ		PLATE, KEYING 4010409 (07187)	C	EA	1									169	45
PAFZZ	5975-808-4064	STUFFING, TUBE M19622-3-002 (81349)	C	EA	2	*	*	*	*	*	*	*	*	169	46
PAFZZ	4730-595-0670	COUPLING, PIPE: 1/2-14 THD SIZE WMS21-1-21N (81348)	C	EA	1	*	*	*	*	*	*	*	*	169	47
MFZZZ		PIPE: RISER 4010440 (07187) MANUFACTURE FROM:	C	EA	1									169	48
PAFZZ	4710-277-5471	PIPE, GALVANIZED, 1/2 IN., AS REQUIRED WWP40AGRADEA (81348)	C	FT		*	*	*	*	*	*			169	
PAFZZ	5310-281-9645	NUT, SELF-LOCKING: MAGNETIC TRANSMITTER MTG, NO. 4-40 THD SIZE MS20365D440A (96906)	C	EA	4	*	*	*	*	*	*	*	*	169	49
PAFZZ	5920-296-0445	FUSE, CARTRIDGE F60C500V5A (81349)	C	EA	2	*	*	*	*	*	*	*	*		

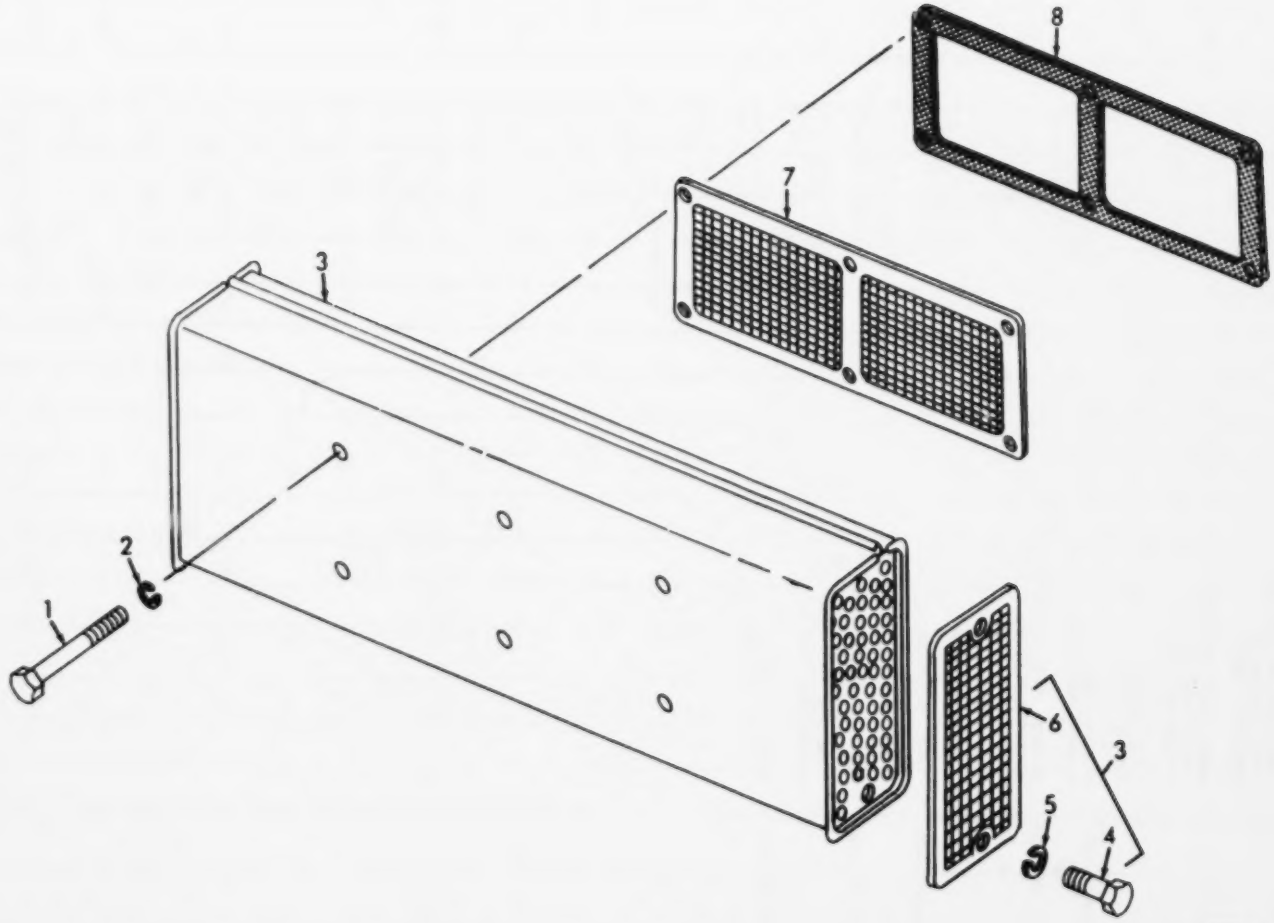

ME 1905-217-34P/1

Figure 1. Air Inlet Silencer

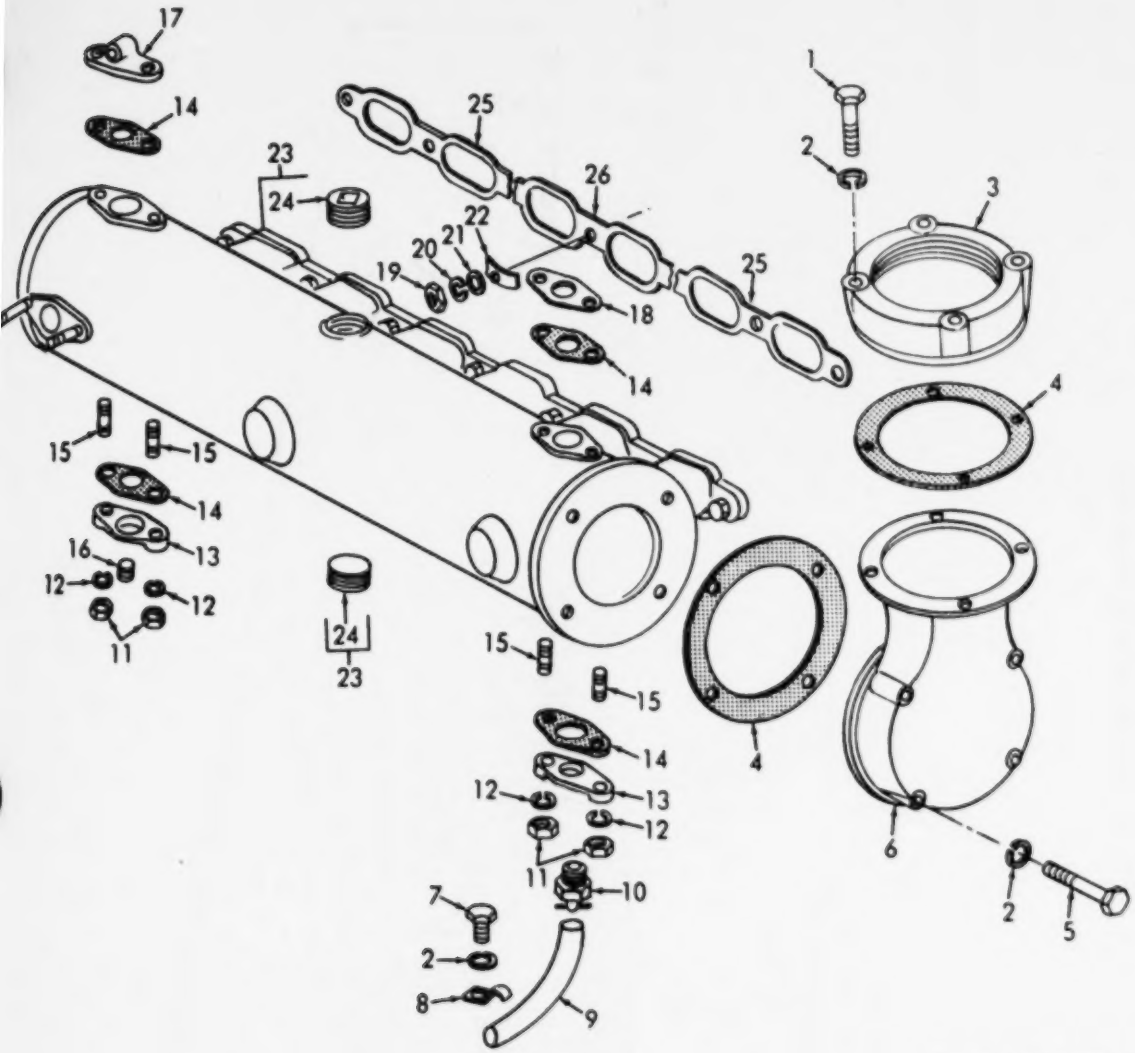

ME 1905-217-34P/2

Figure 2. Exhaust Manifold

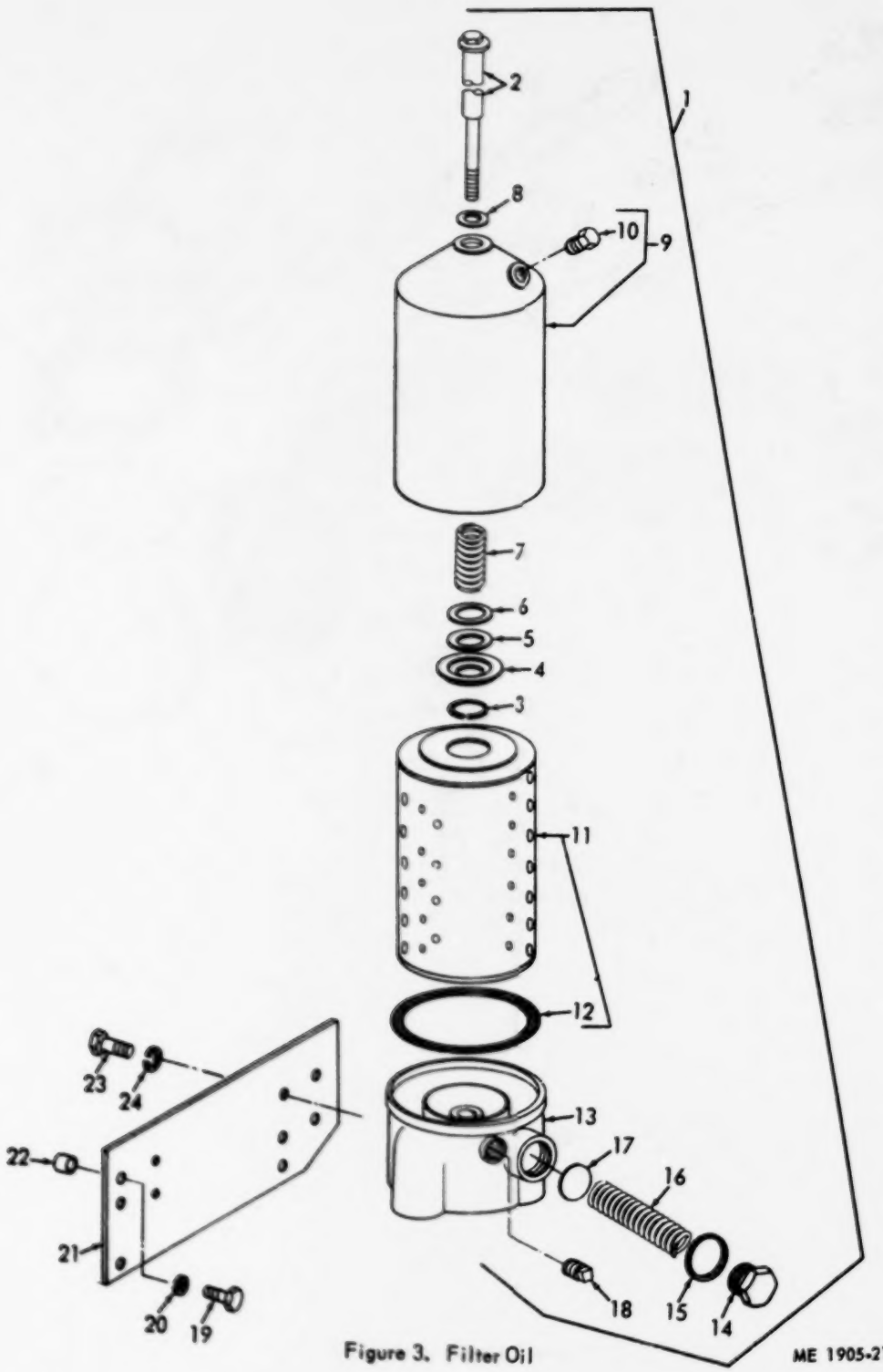

Figure 3. Filter Oil

ME 1905-217-34P/3

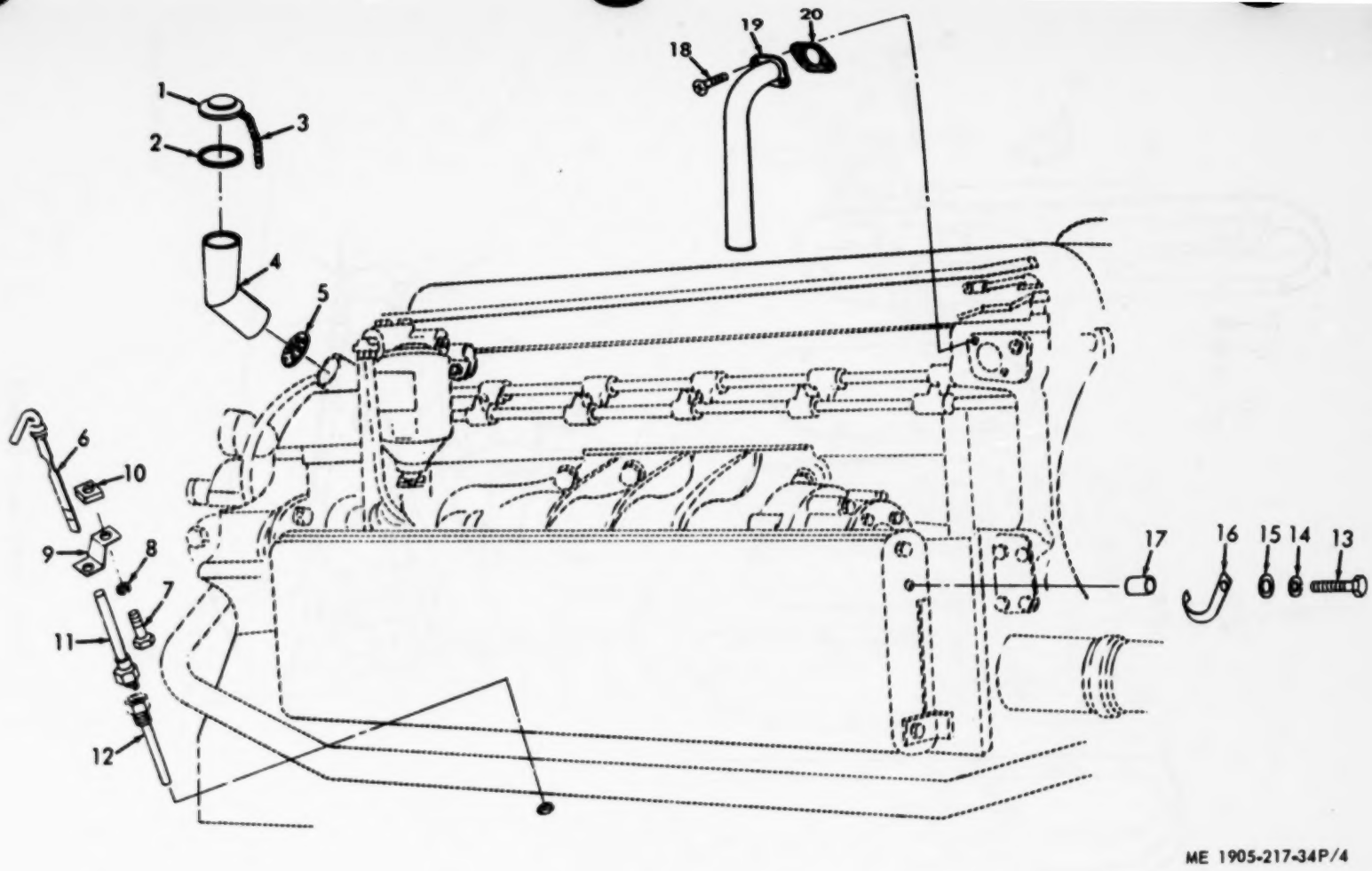

Figure 4. Oil Filter, Dipstick and Breather

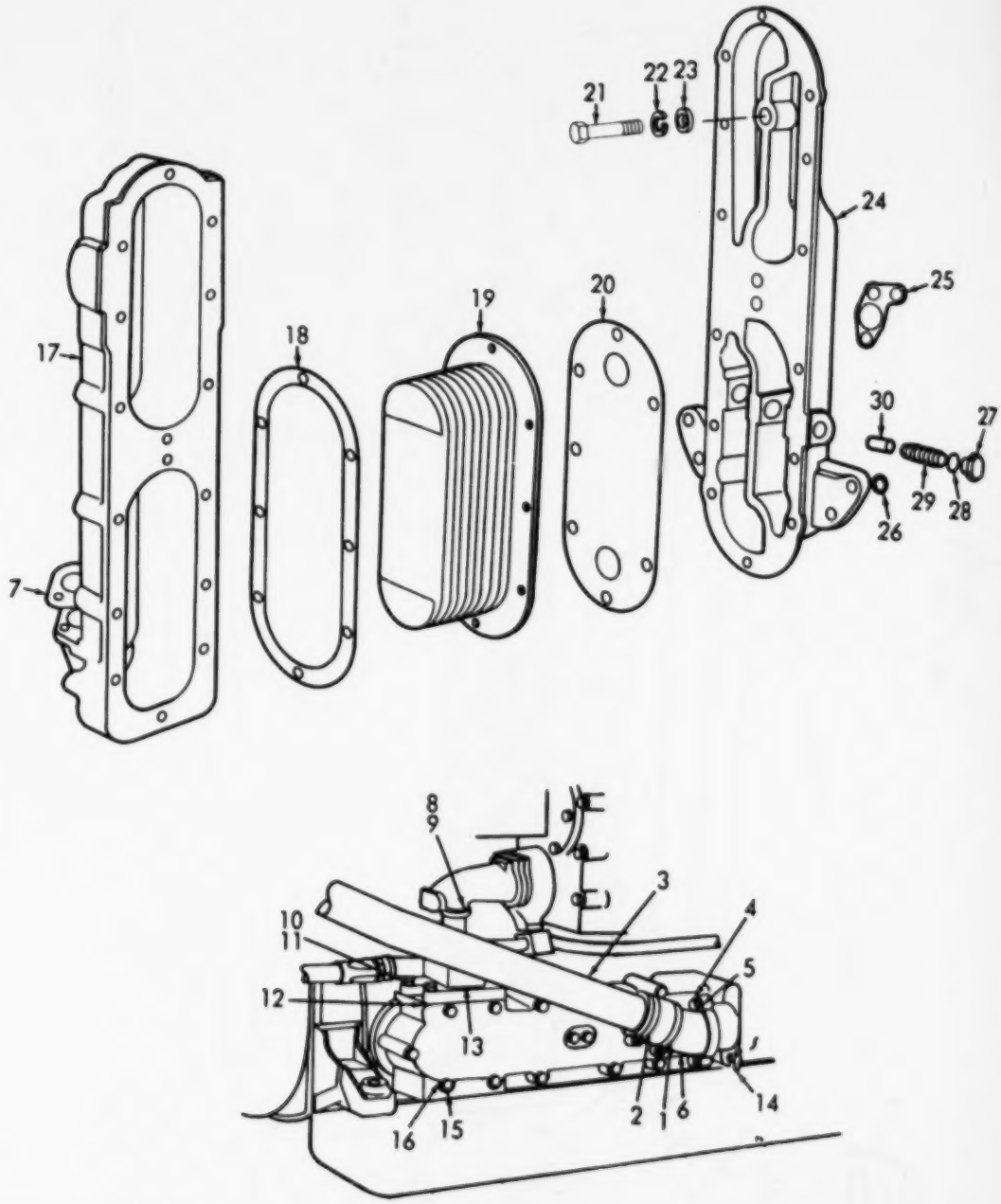

ME 1905-217-34P/5

Figure 5. Oil Cooler (Engine)

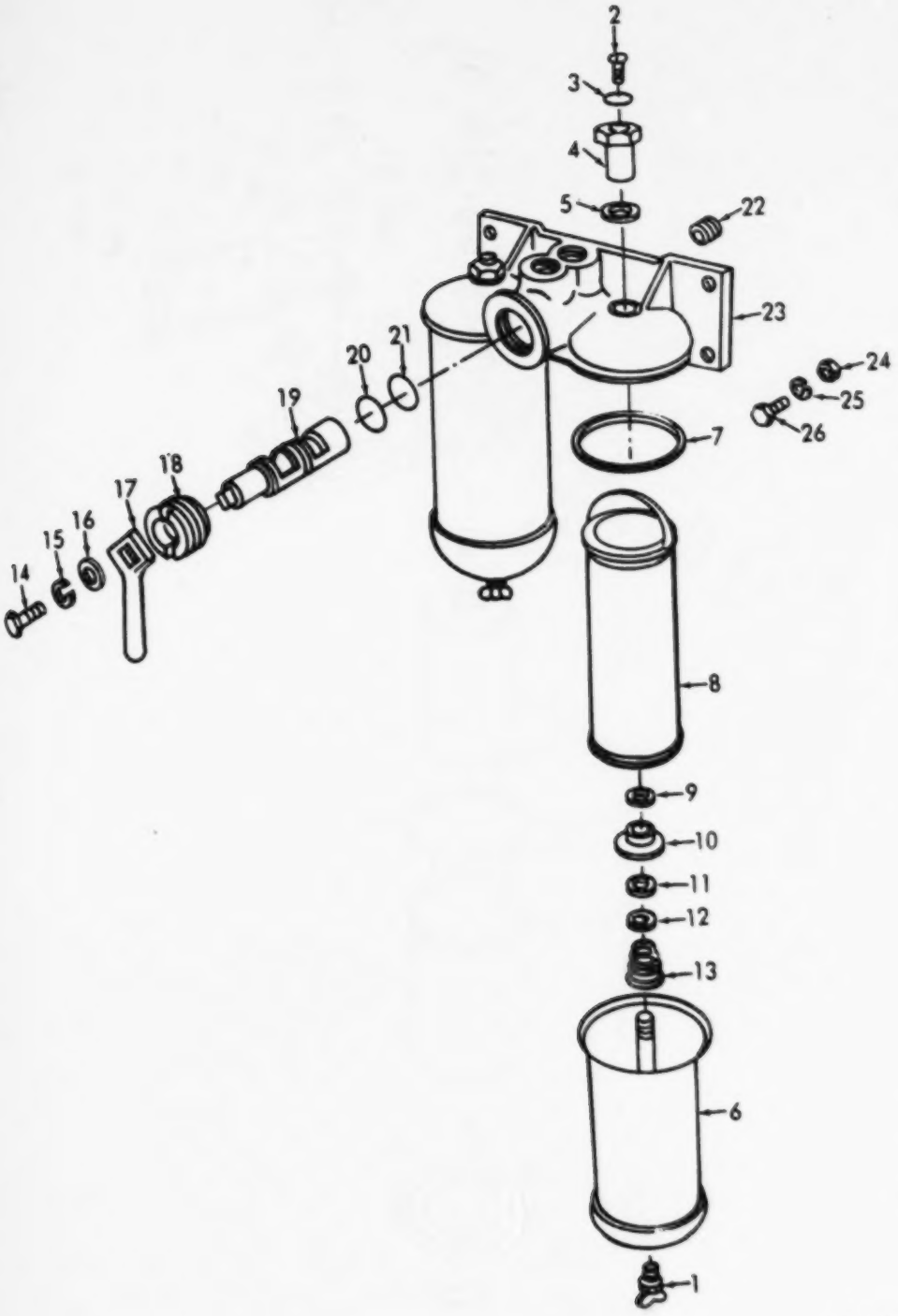

ME 1905-217-34P/6

Figure 6. Fuel Filter

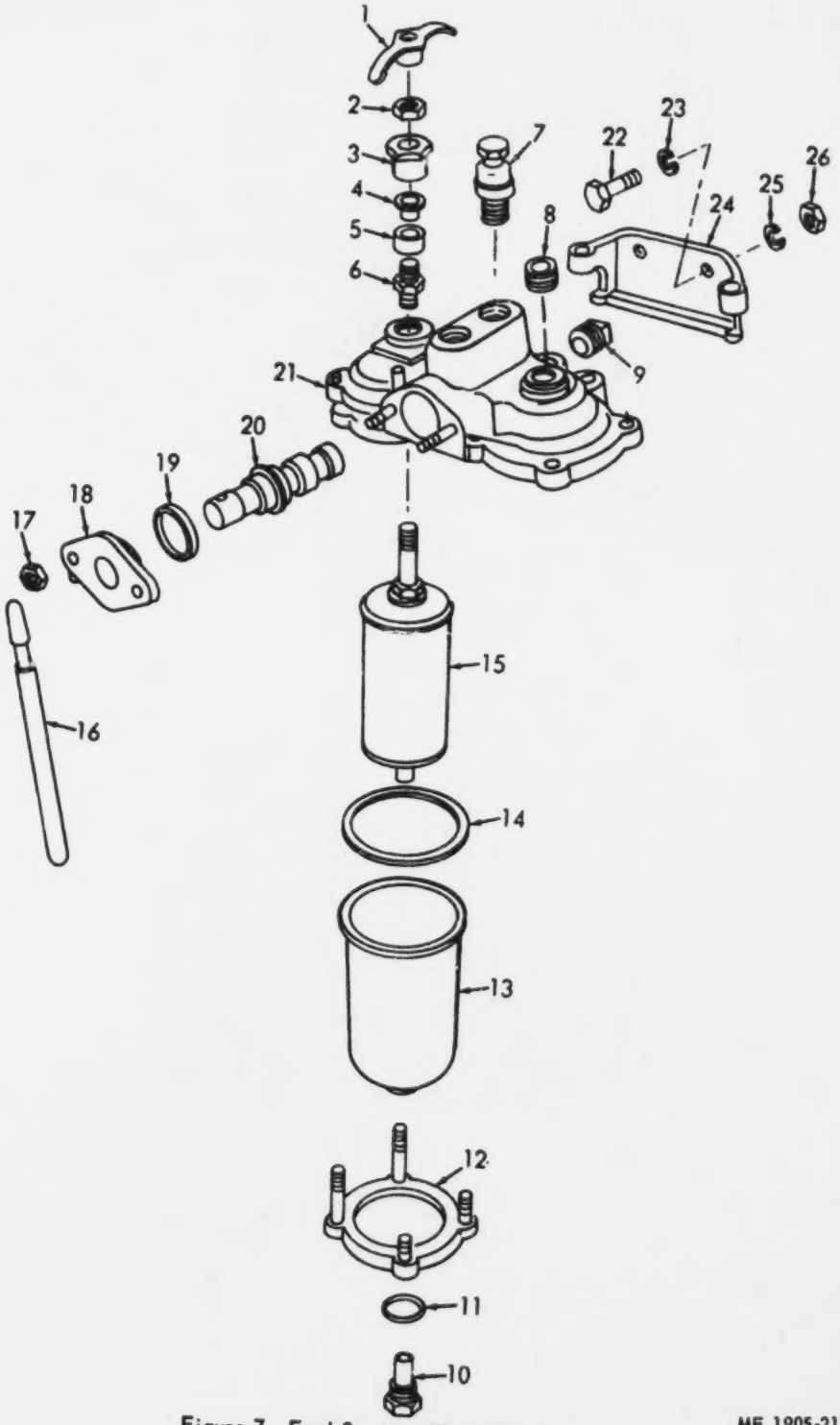

Figure 7. Fuel Strainer (Engine Mounting)

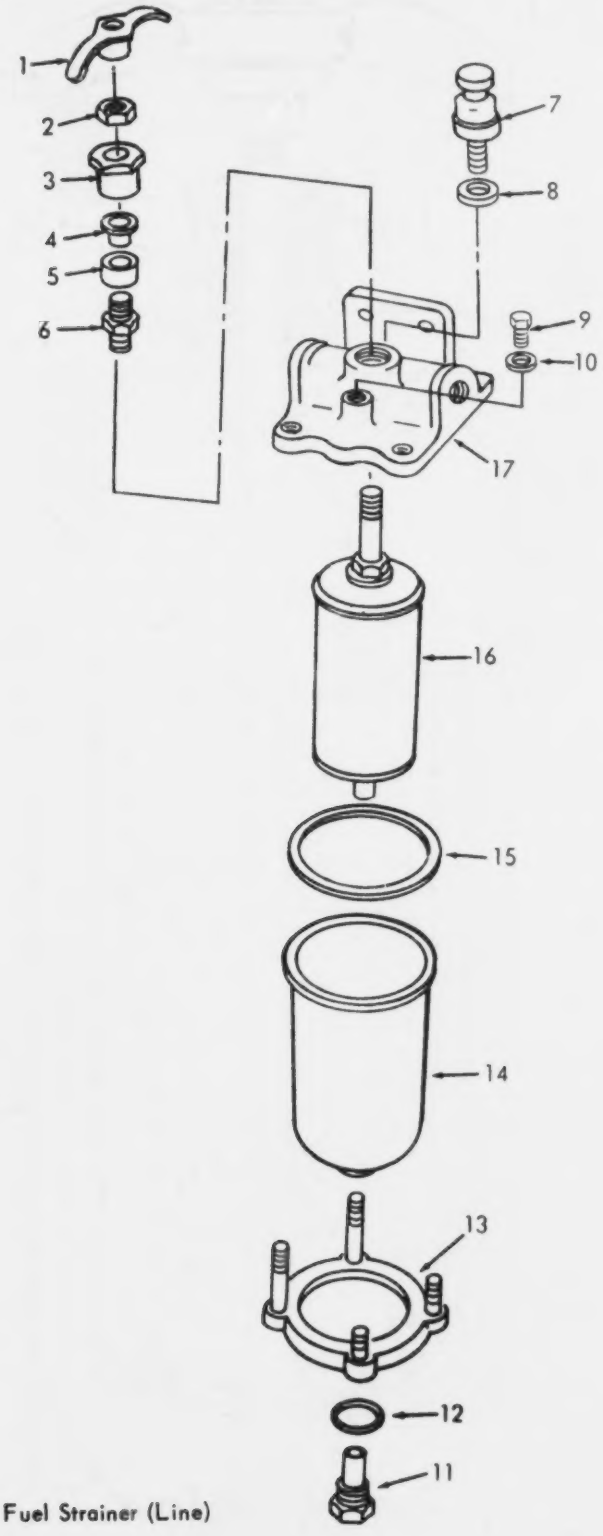

Figure 8. Fuel Strainer (Line)

ME 1905-217-34P/8

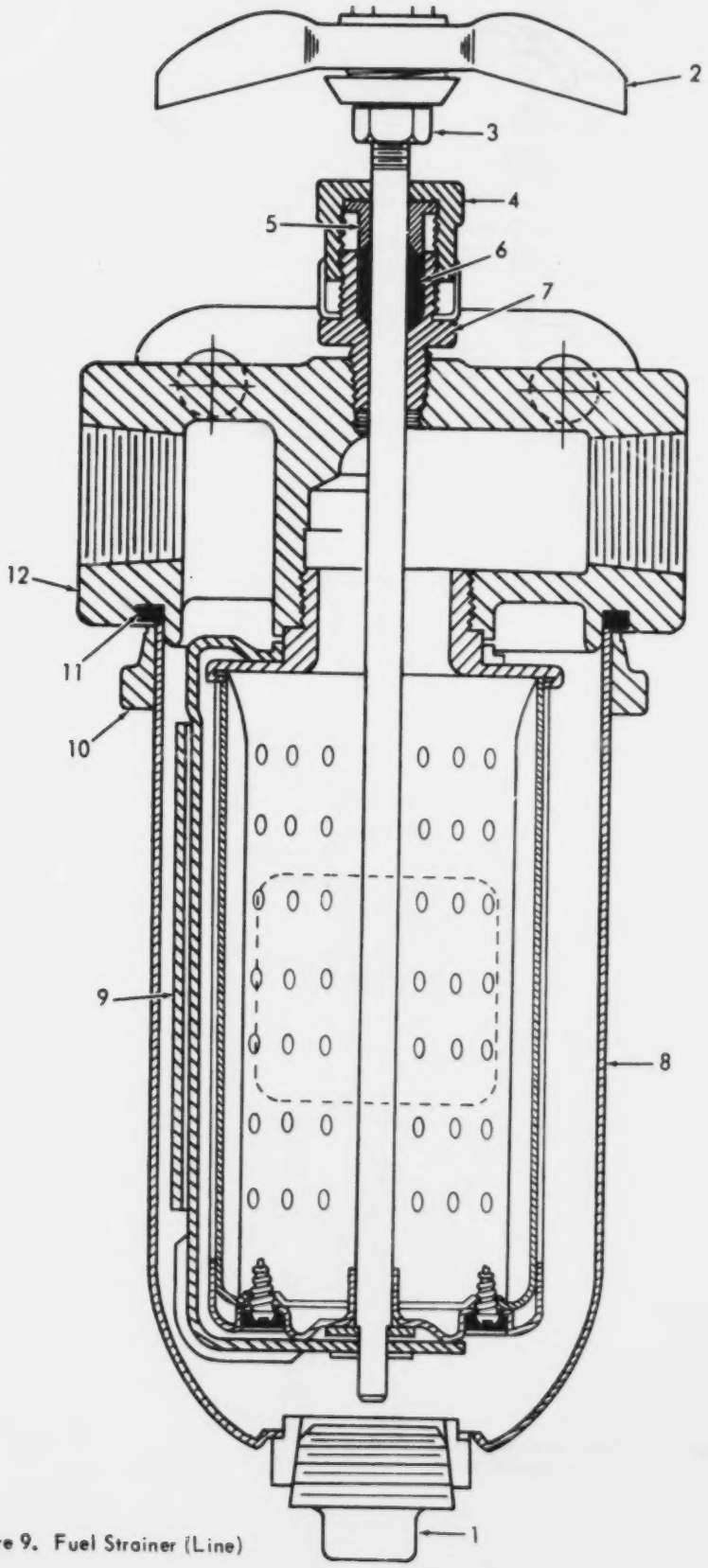

Figure 9. Fuel Strainer (Line)

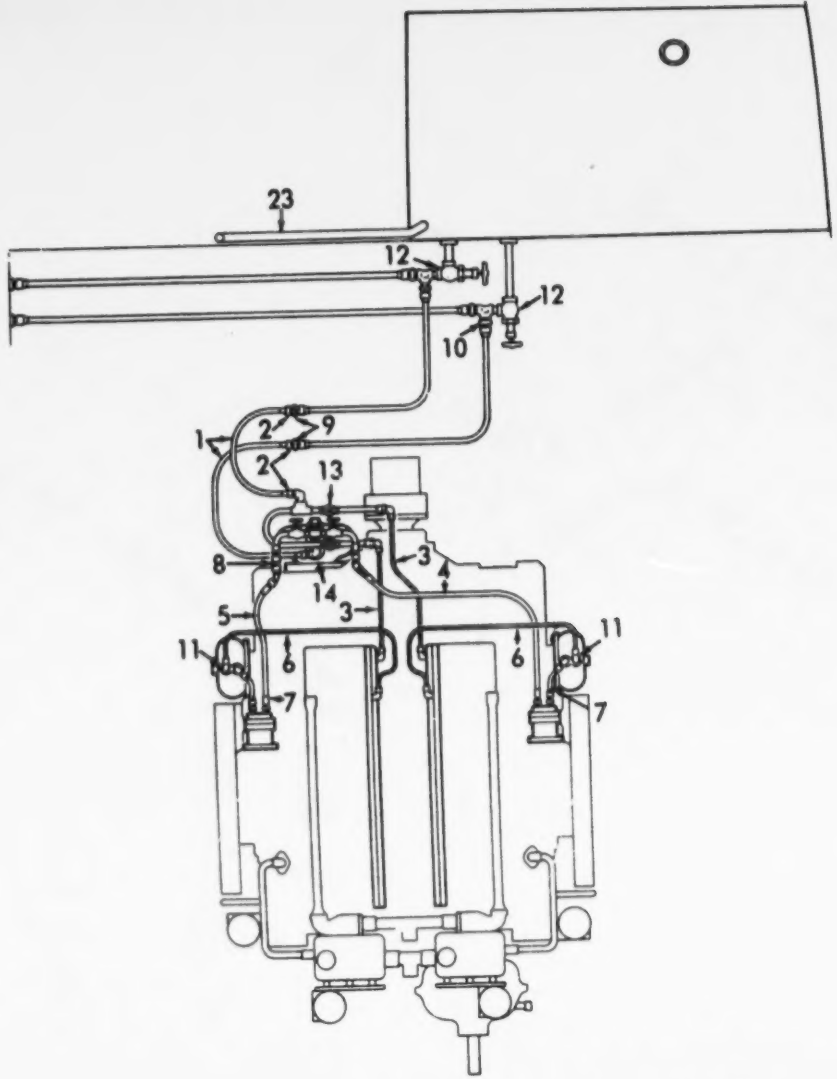

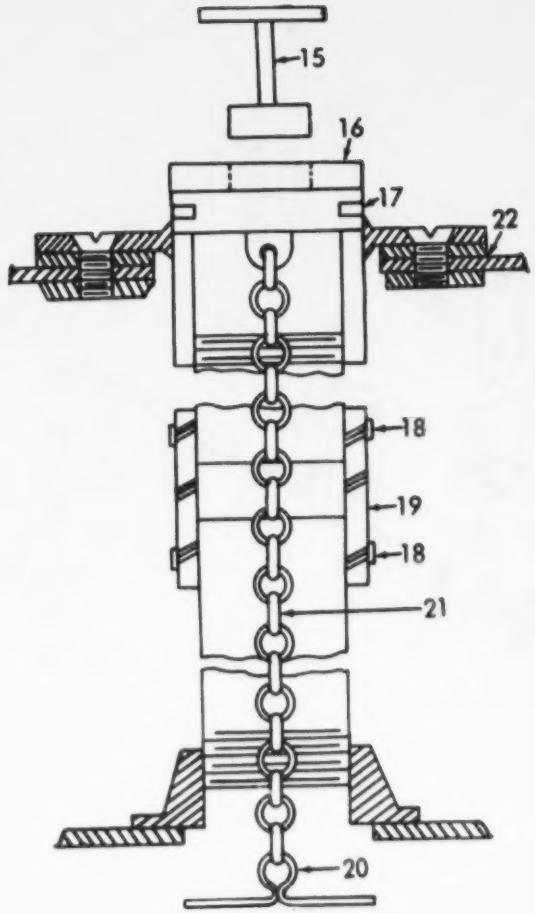

ME 1905-217-34P/10

Figure 10. Fuel Piping

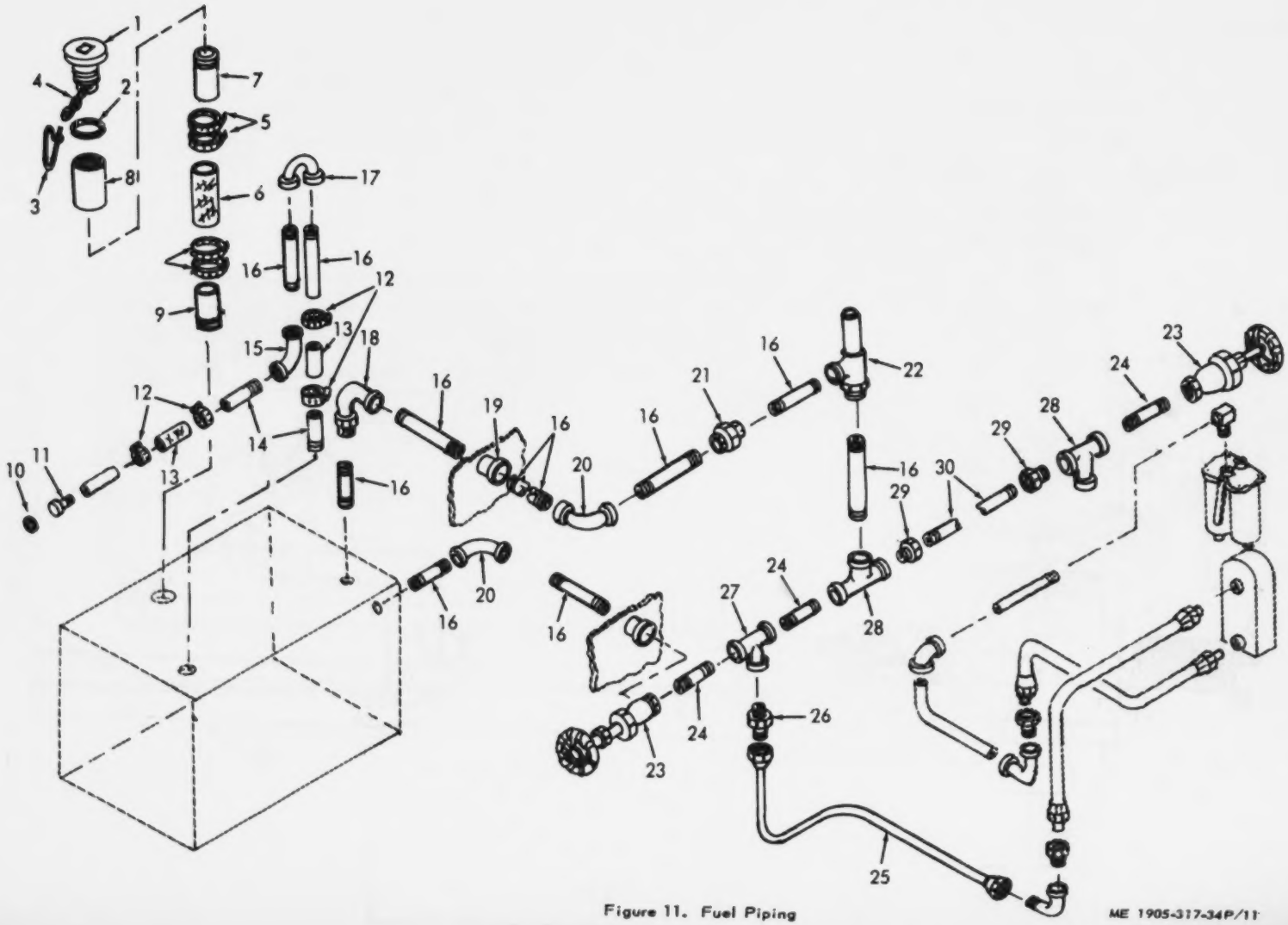

Figure 11. Fuel Piping

ME 1905-317-34P/11

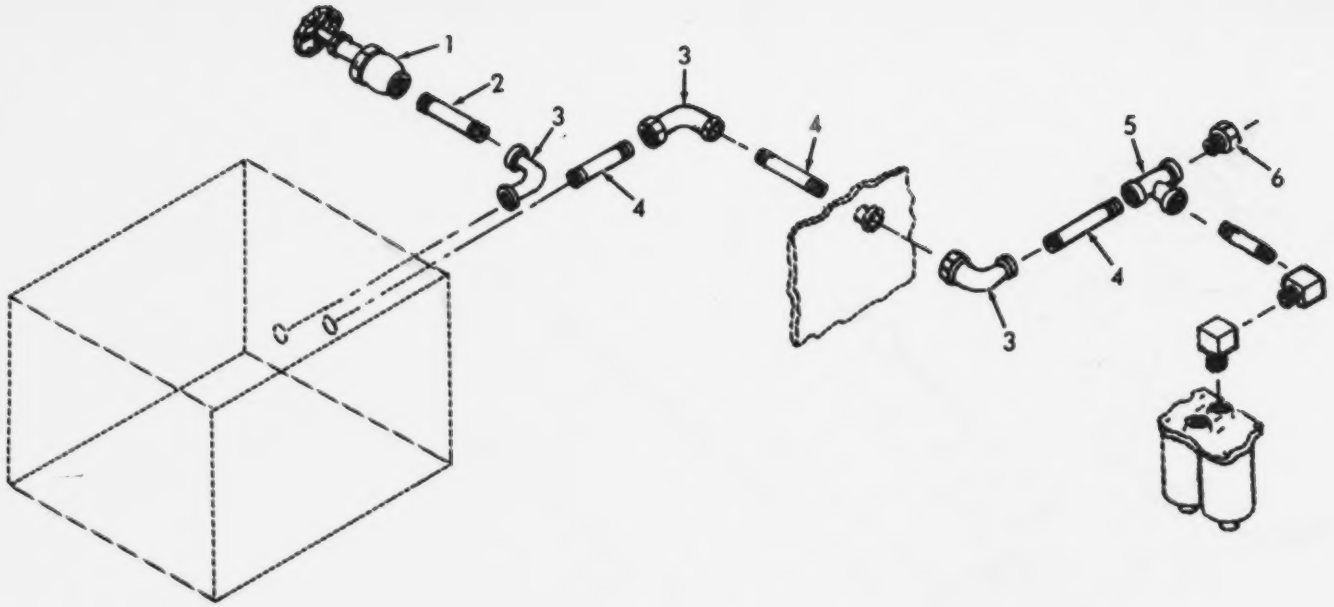

ME 1905-317-34P/12

Figure 12. Fuel Piping

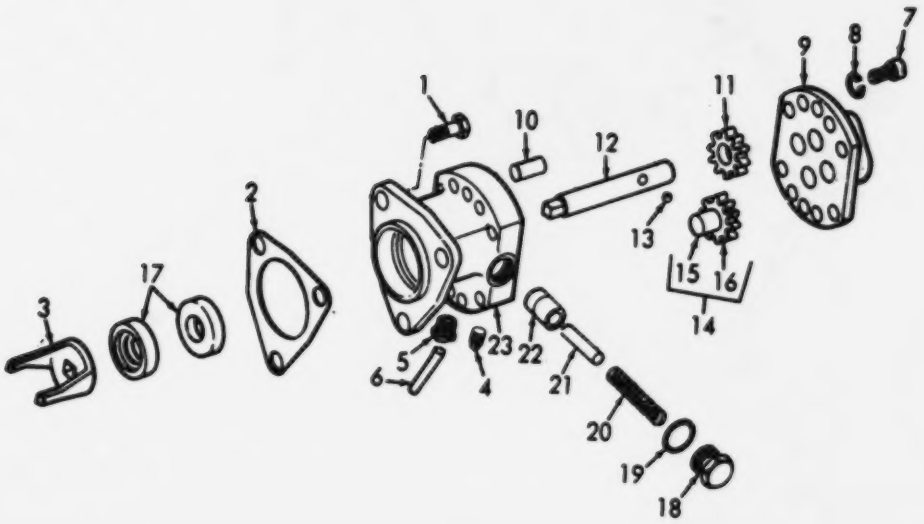

ME 1905-217-34P/13

Figure 13. Fuel Pump

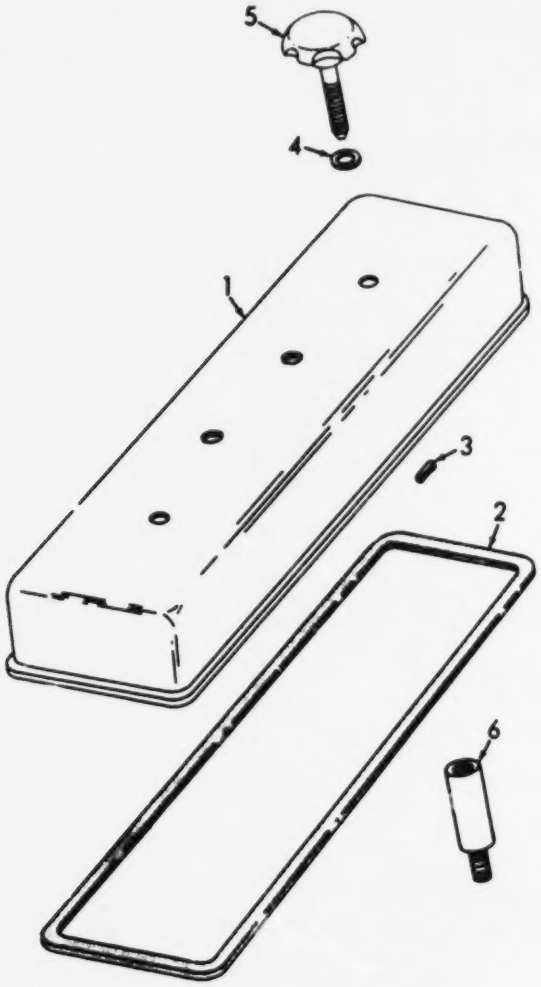

ME 1905-217-34P/14

Figure 14. Rocker Arm Cover

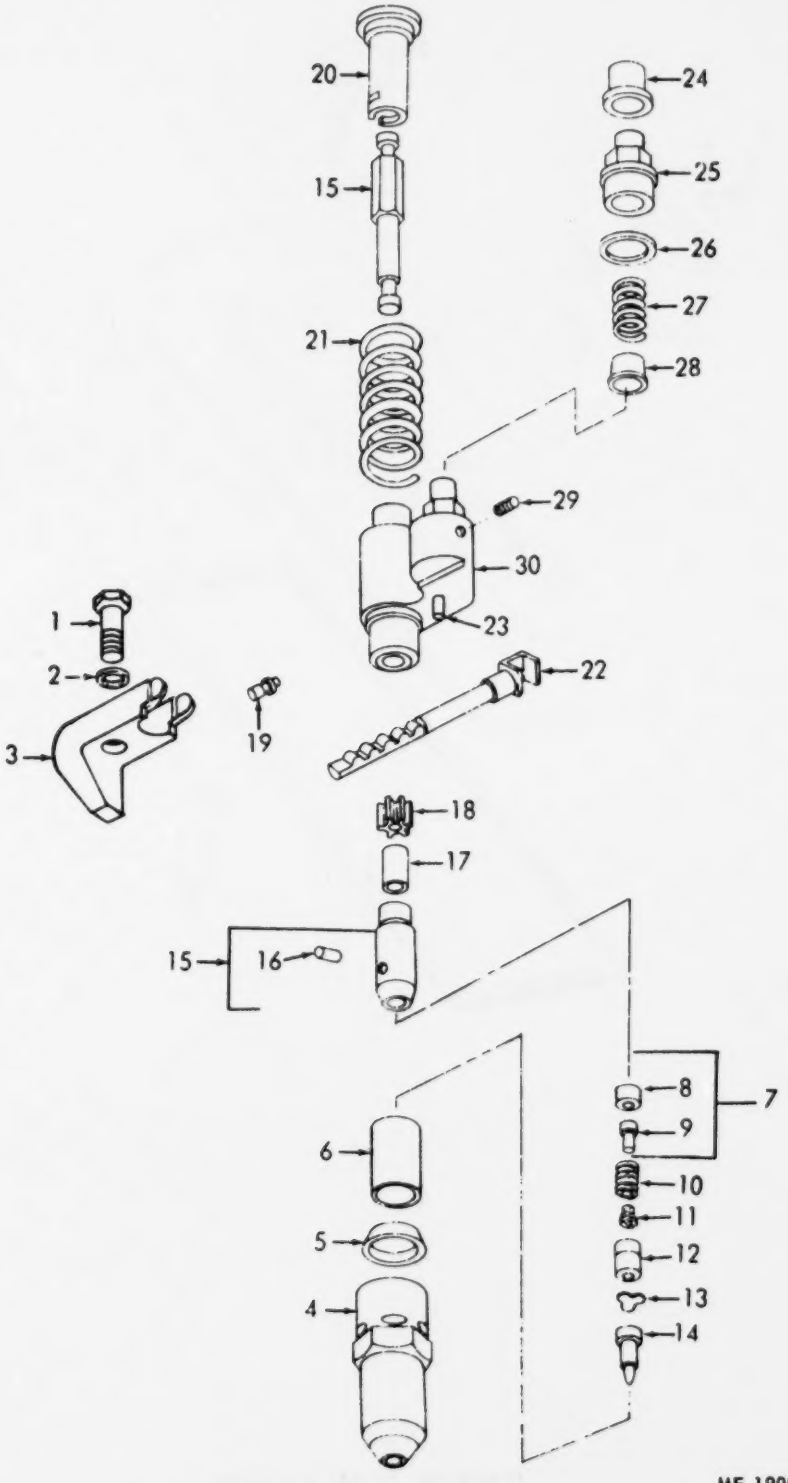

Figure 15. Fuel Injectors

ME 1905-217-34P/15

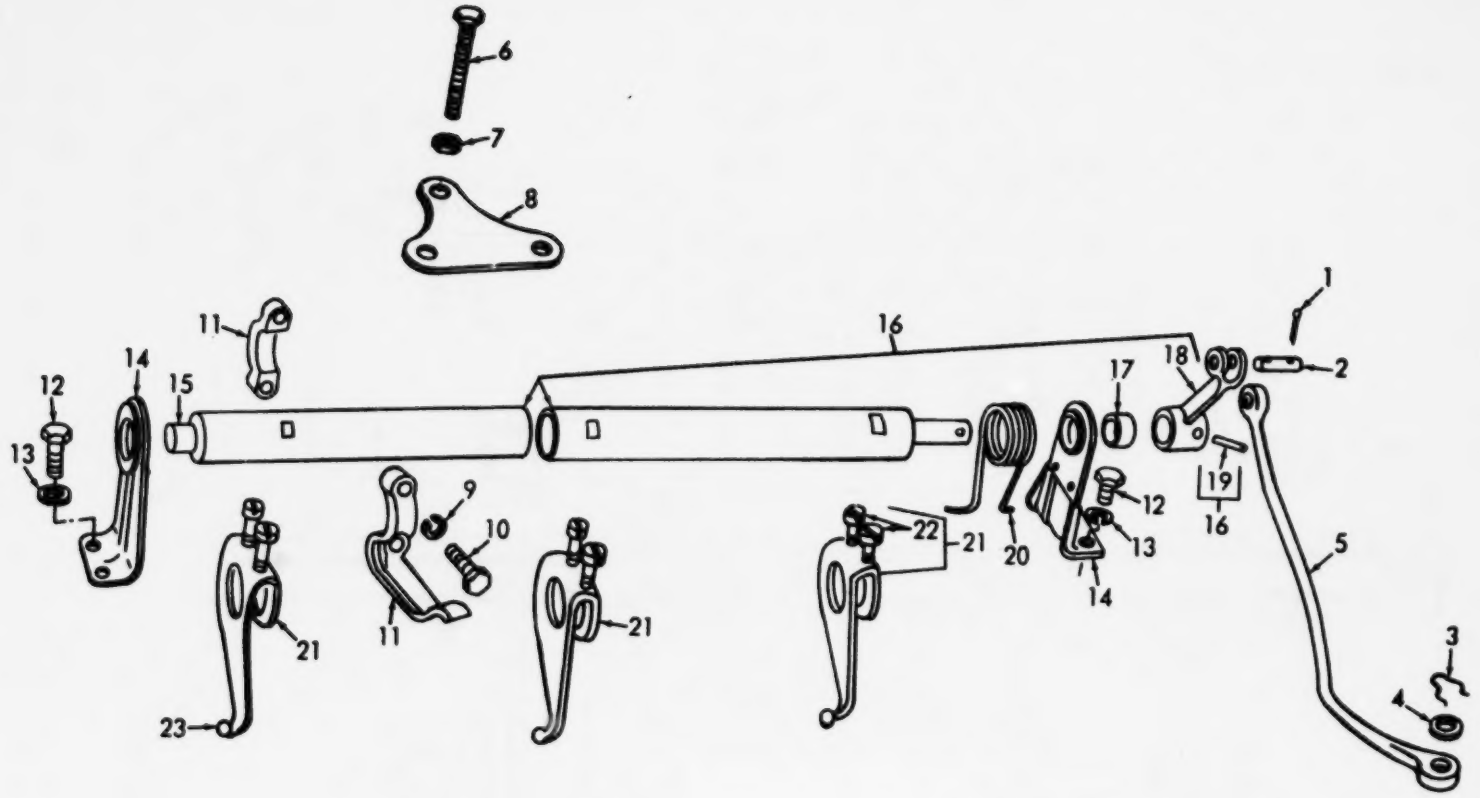

Figure 16. Injector Control Tube

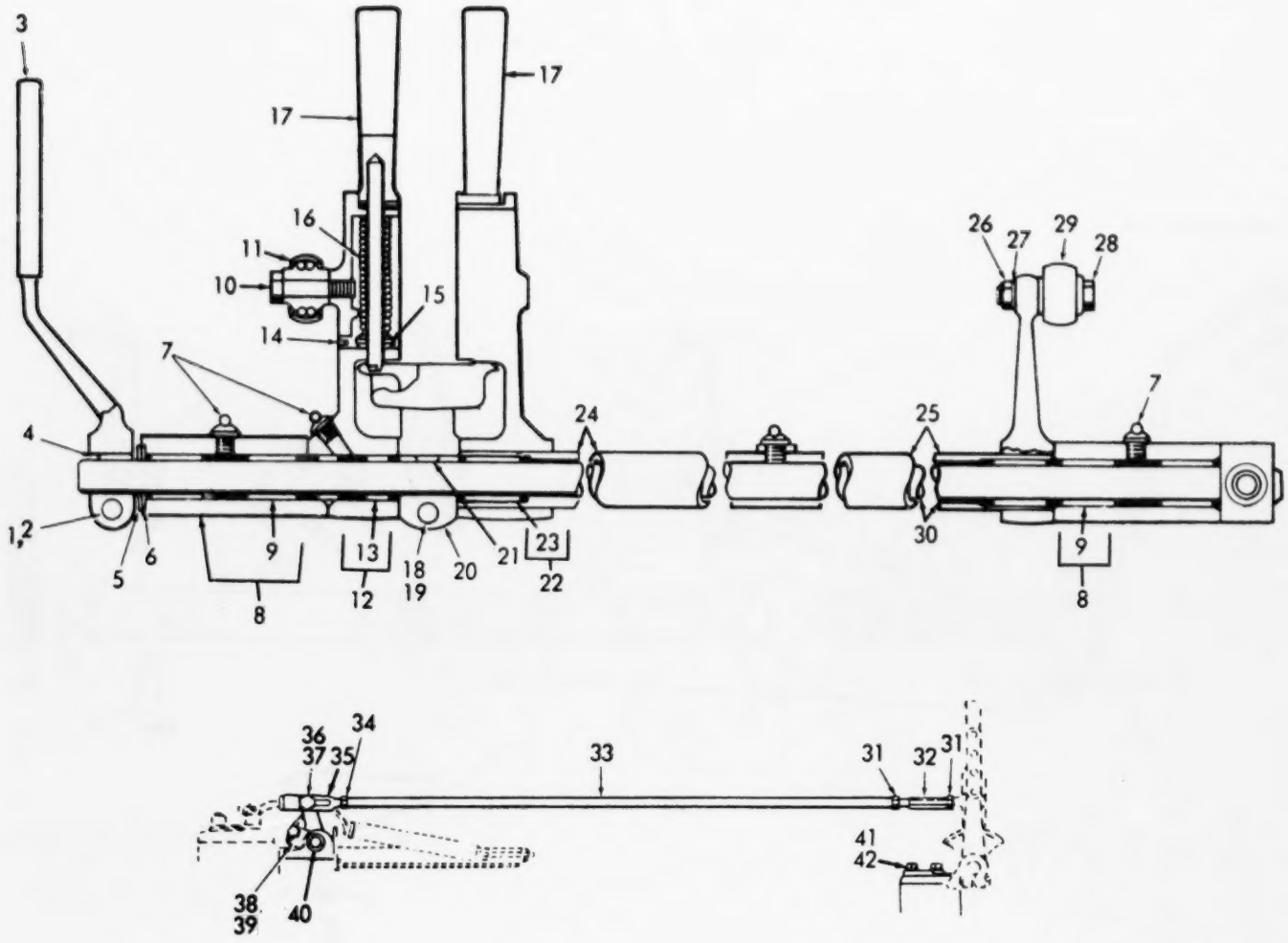

ME 1905-217-34P/17

Figure 17. Throttle Controls

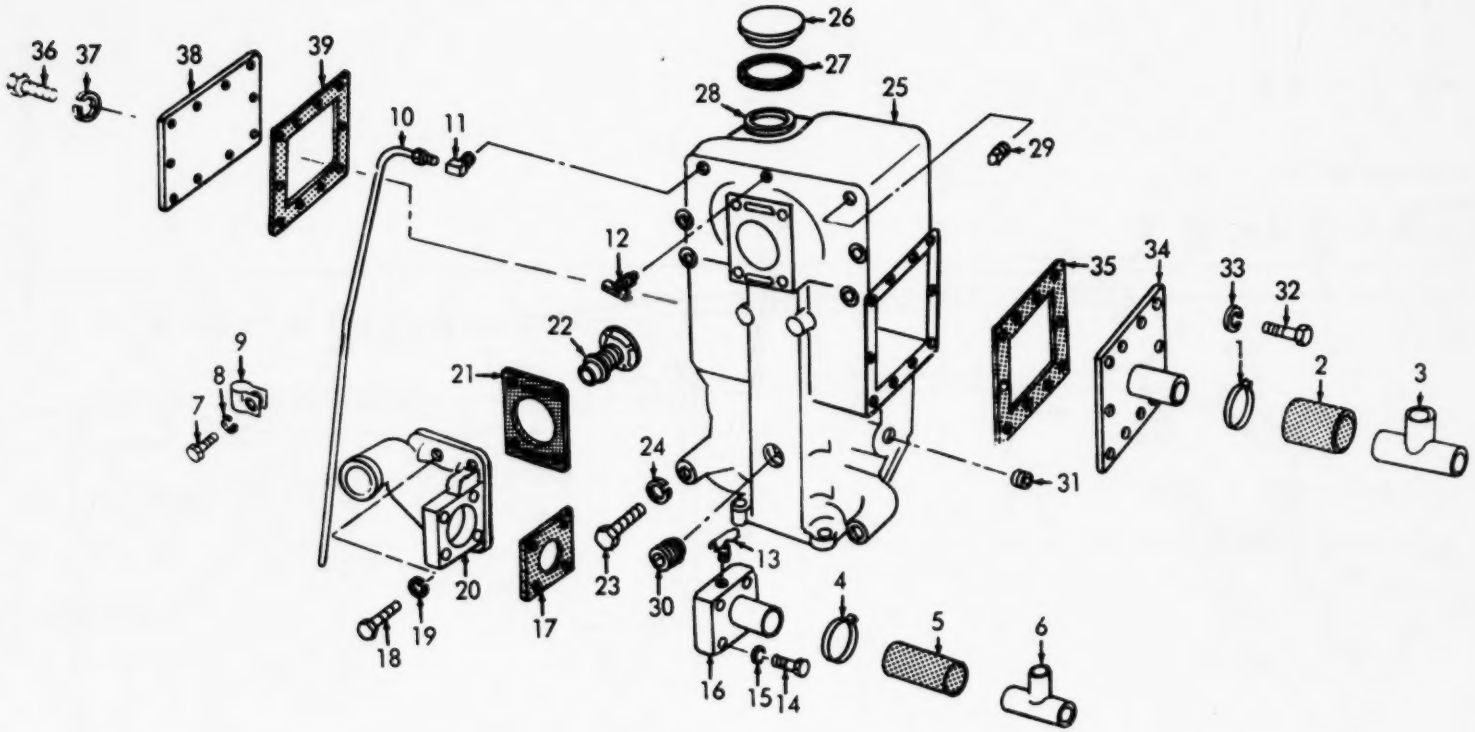

ME 1905-217-34P/18

Figure 18. Heat Exchanger (Engine)

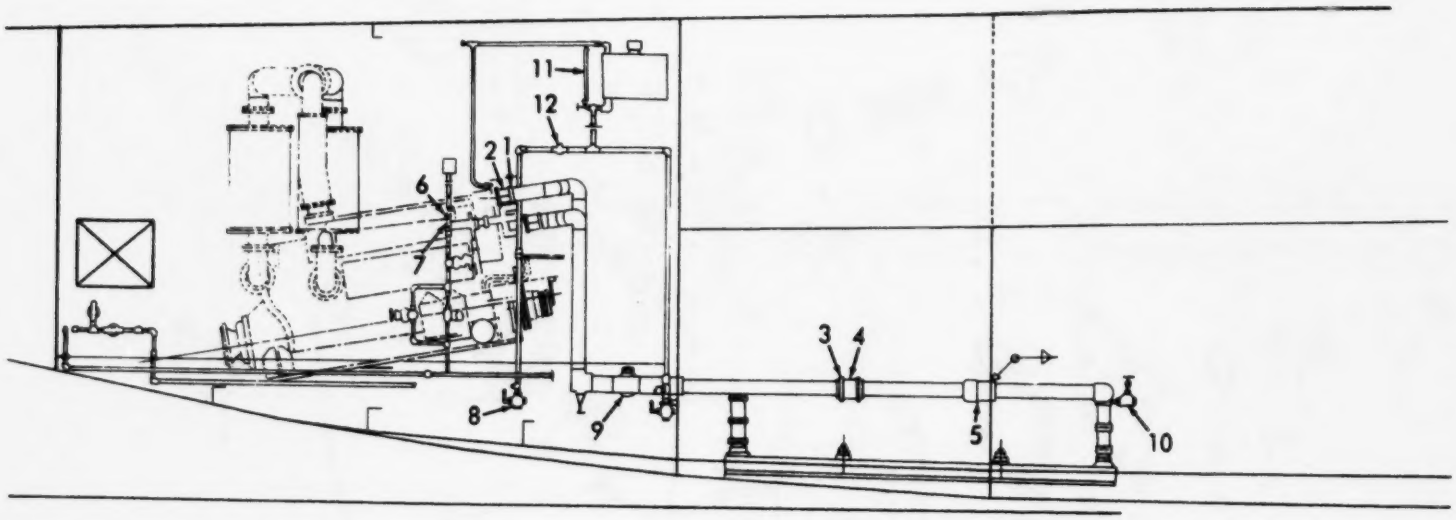

ME 1905-217-34P/19

Figure 19. Engine Cooling Piping

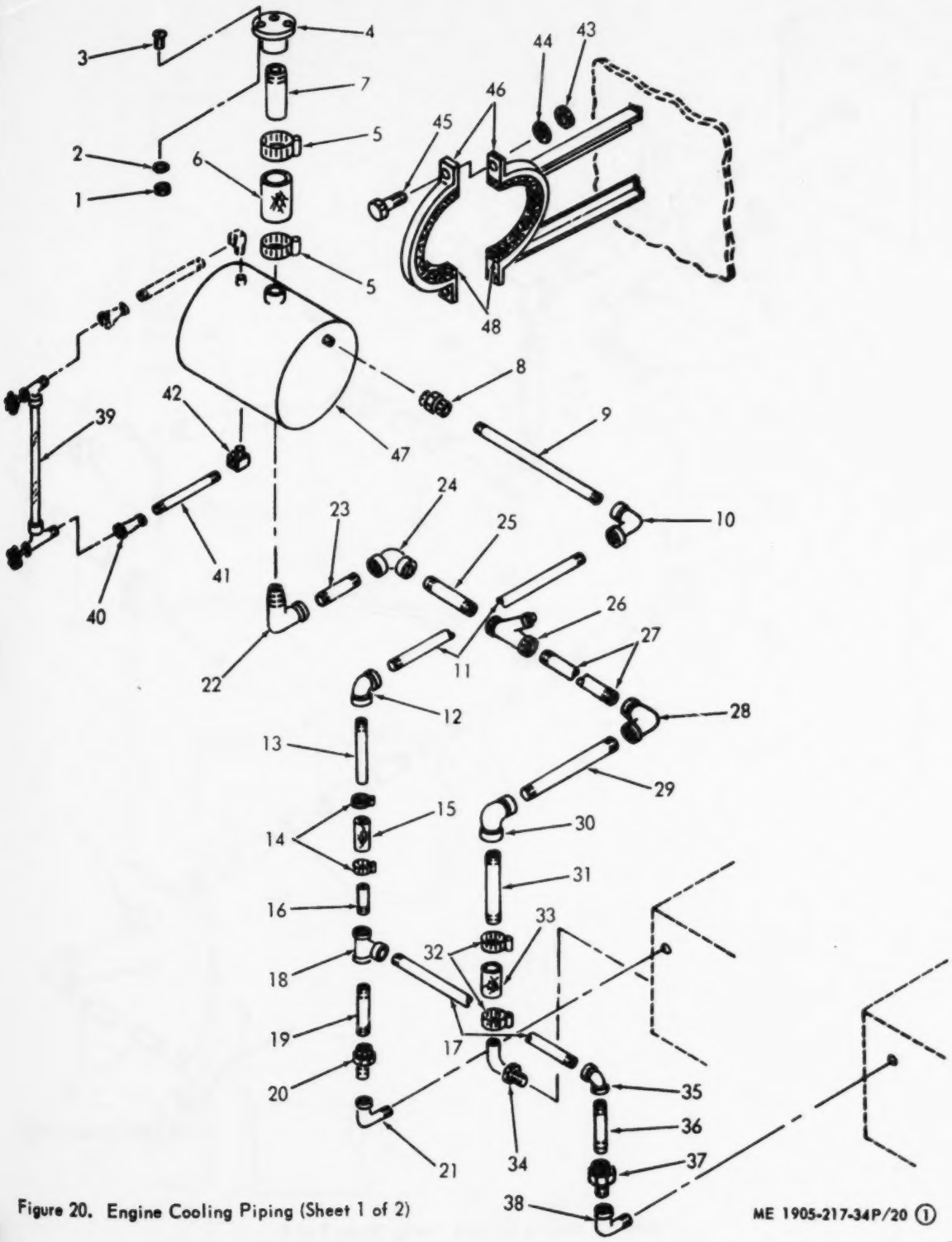

Figure 20. Engine Cooling Piping (Sheet 1 of 2)

ME 1905-217-34P/20 ①

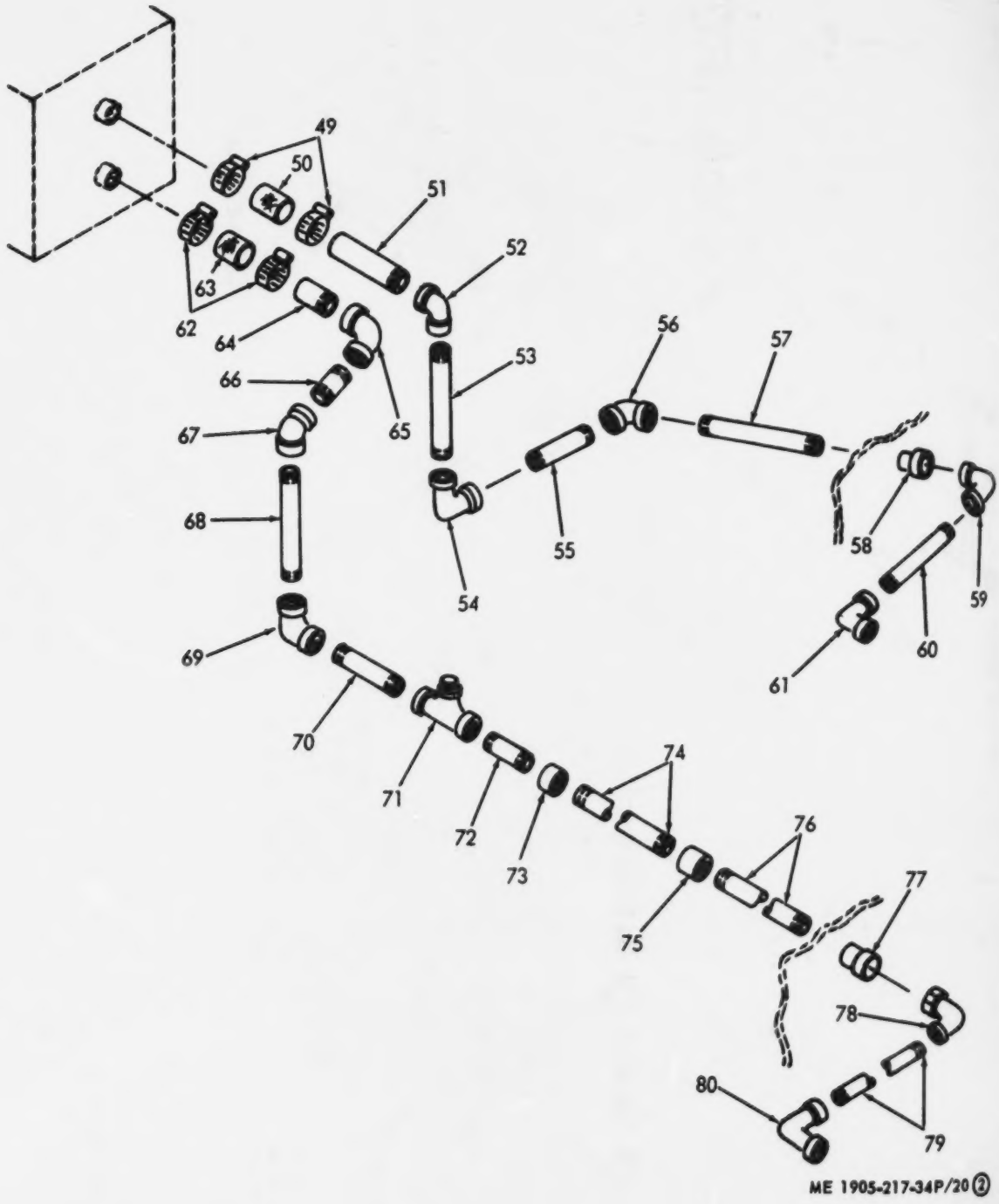

Figure 20. Engine Cooling Piping (Sheet 2 of 2)

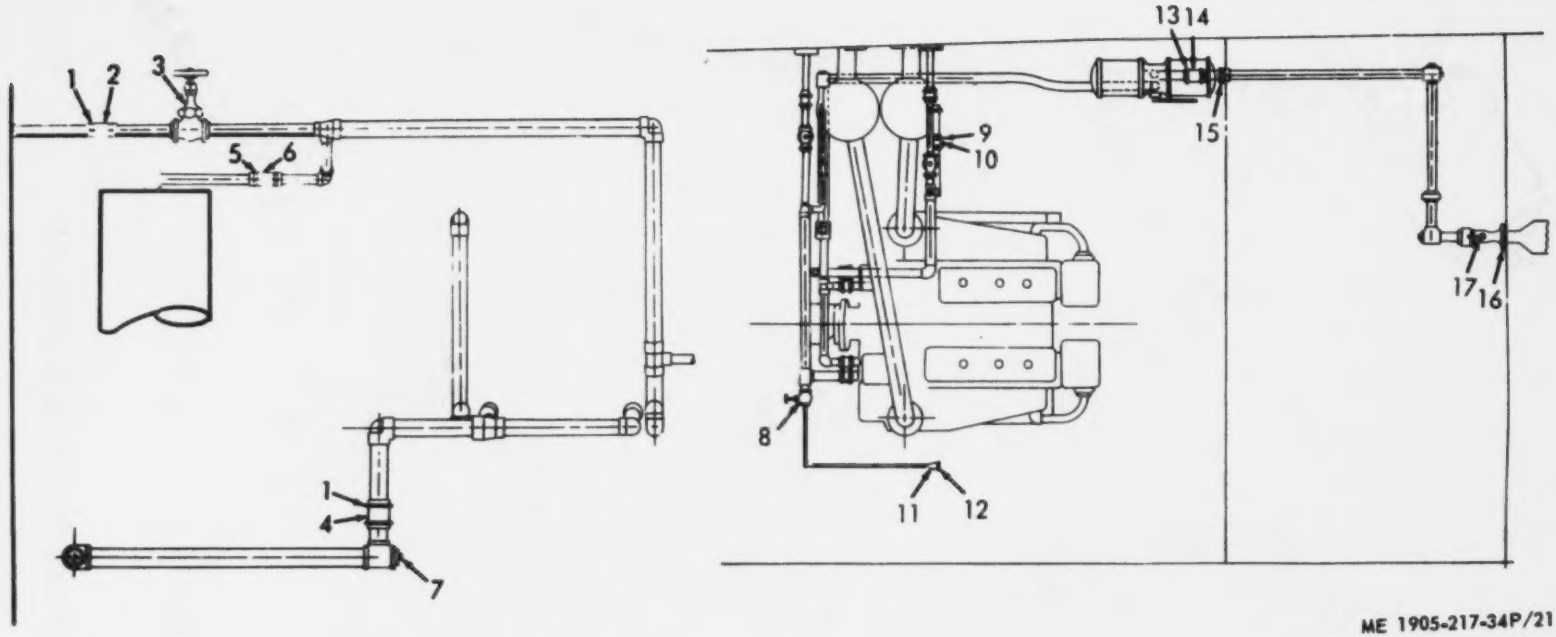

ME 1905-217-34P/21

Figure 21. Sea Water Piping (Sheet 1 of 4)

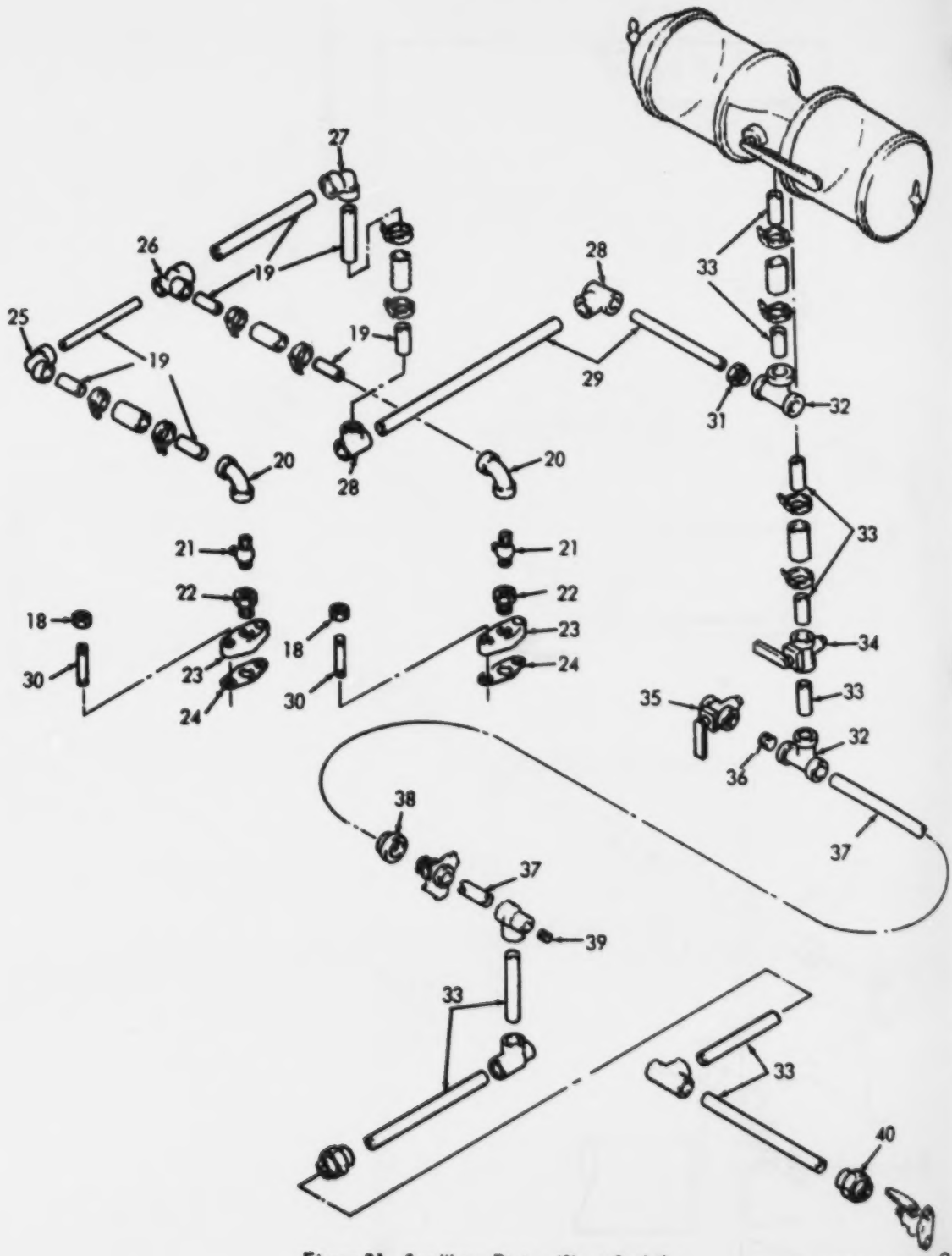

Figure 21. Sea Water Piping (Sheet 2 of 4)

ME 1905-217-34P/21 ②

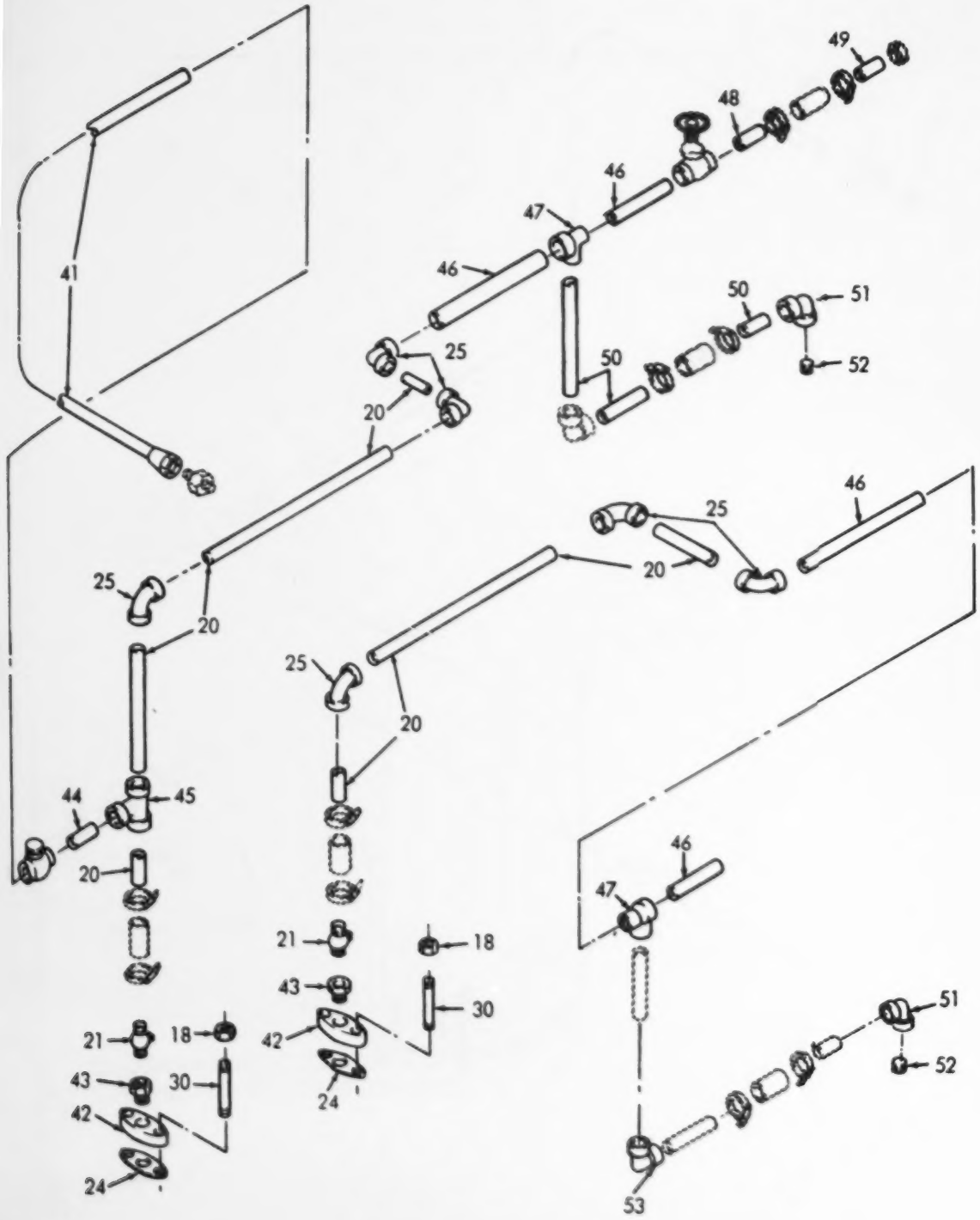

Figure 21. Sea Water Piping (Sheet 3 of 4)

ME 1905-217-34P/21 ③

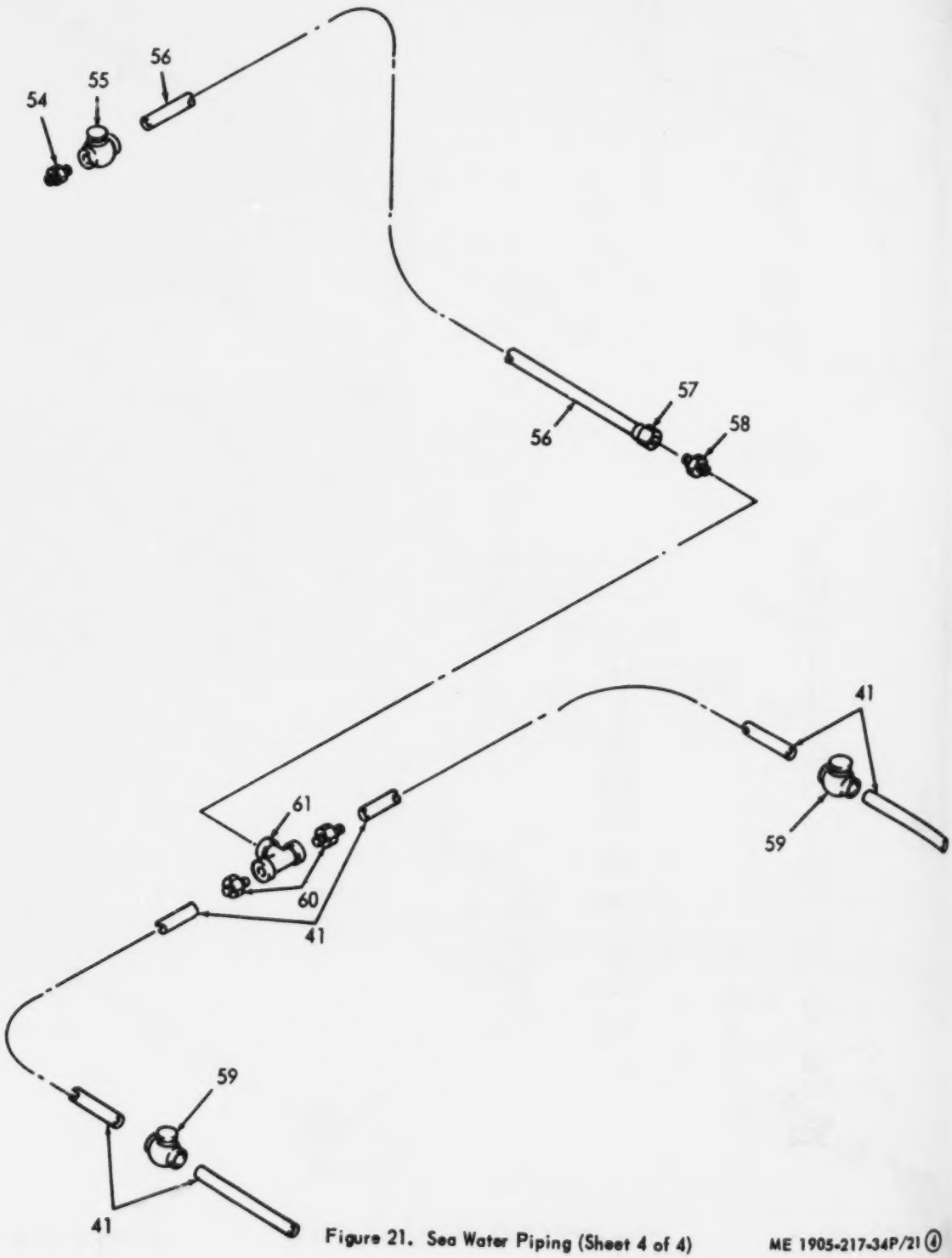

Figure 21. Sea Water Piping (Sheet 4 of 4)

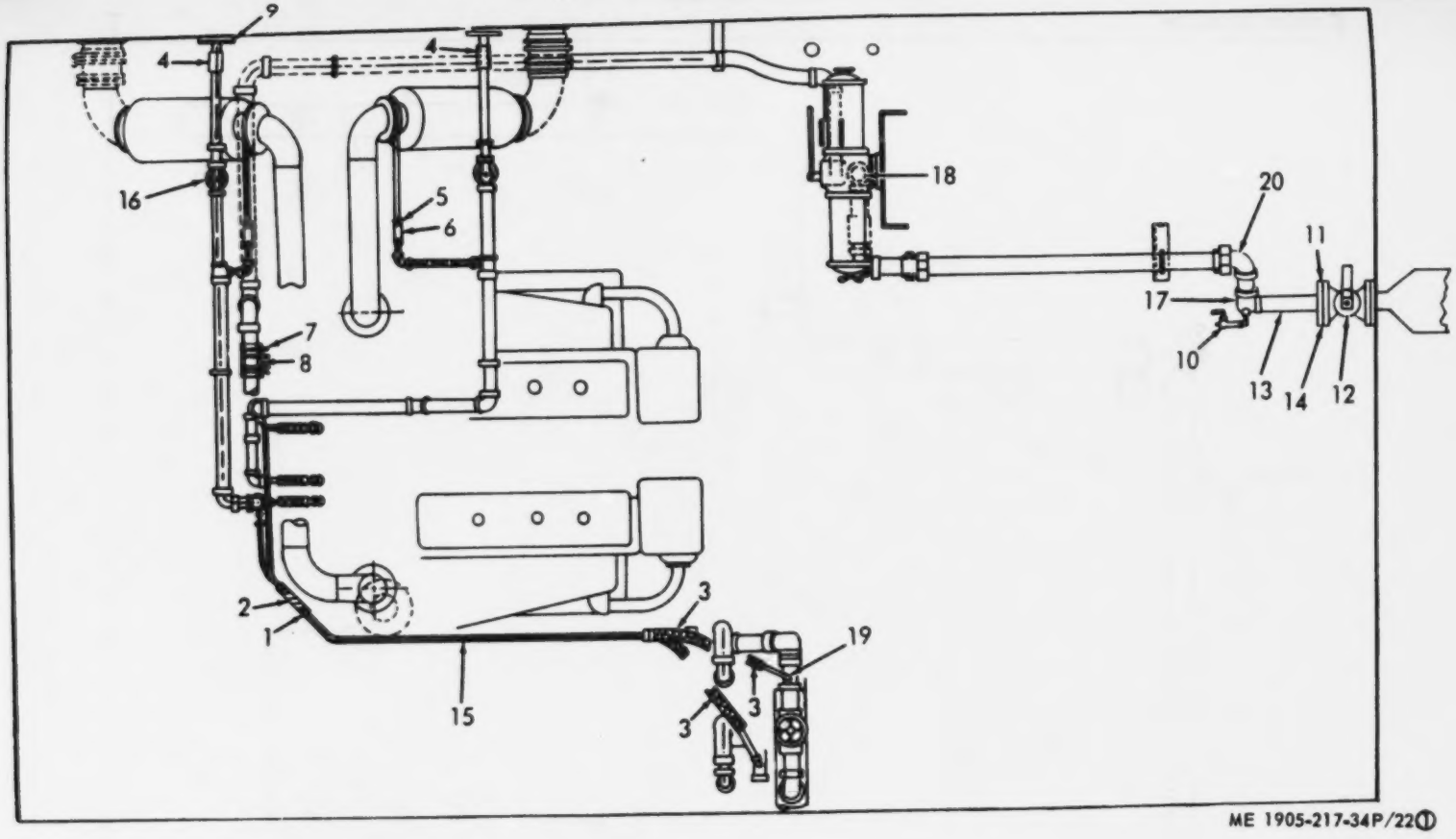

Figure 22. Sea Water Piping (Sheet 1 of 2)

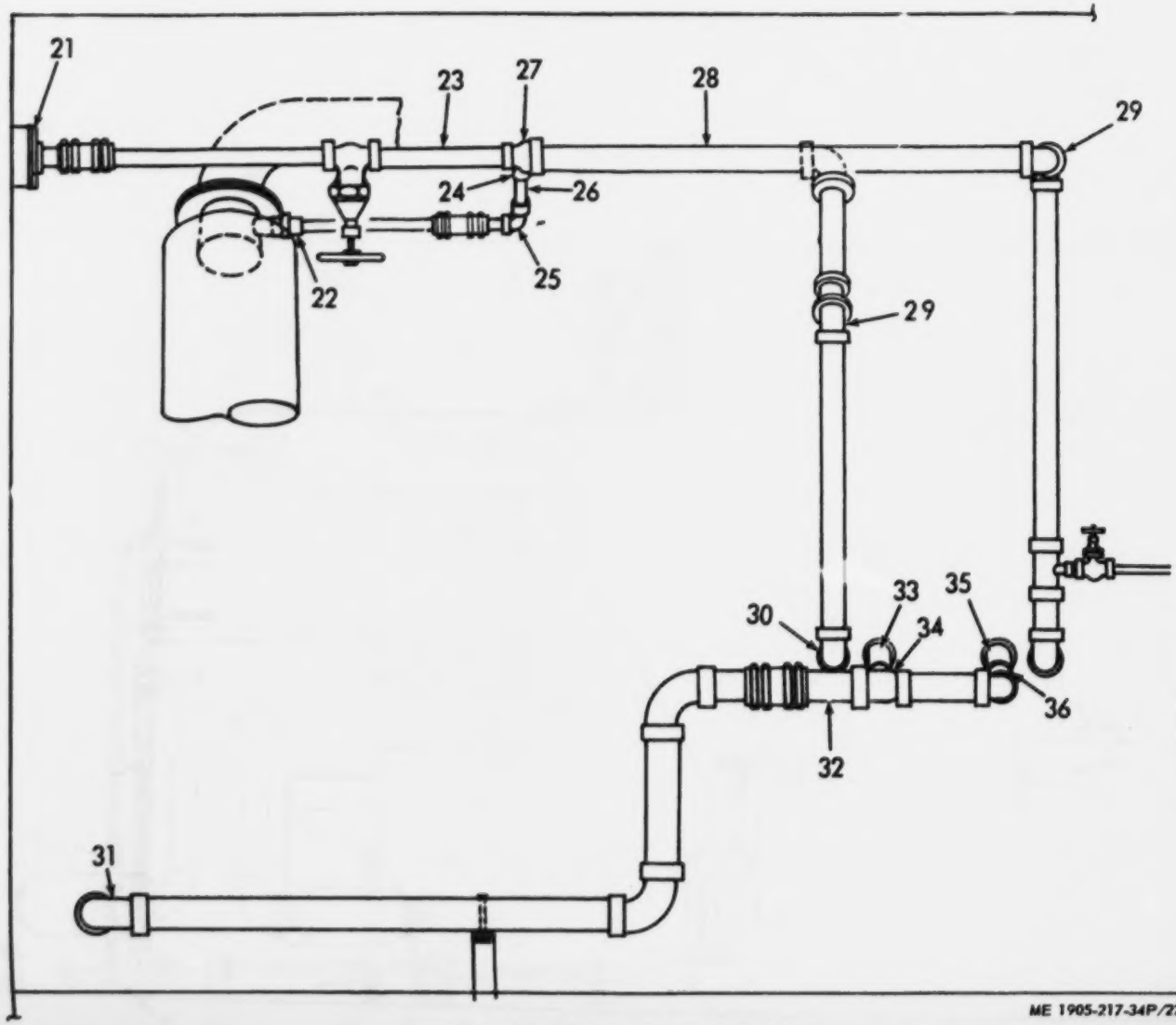

Figure 22. Sea Water Piping (Sheet 2 of 2)

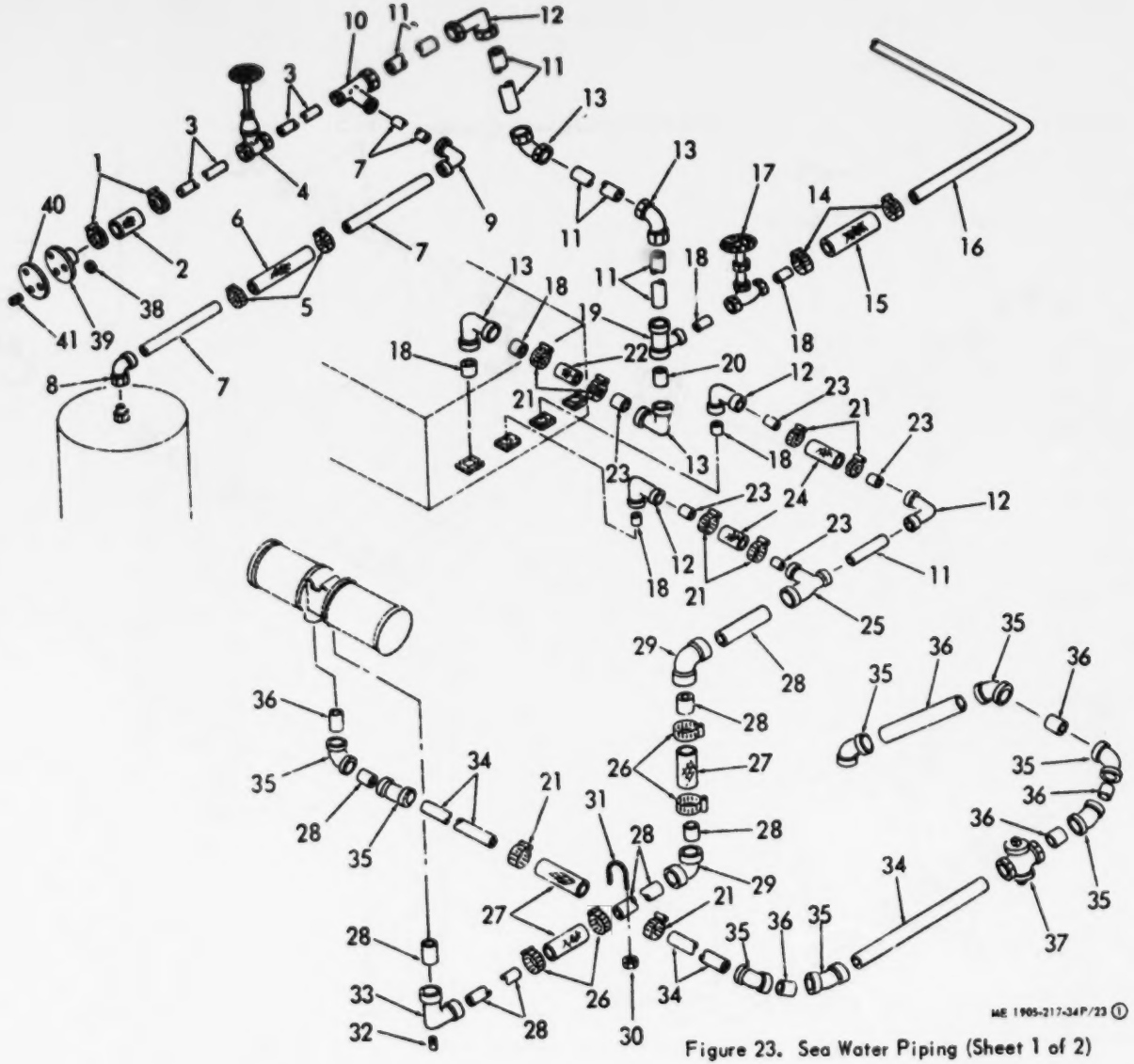

Figure 23. Sea Water Piping (Sheet 1 of 2)

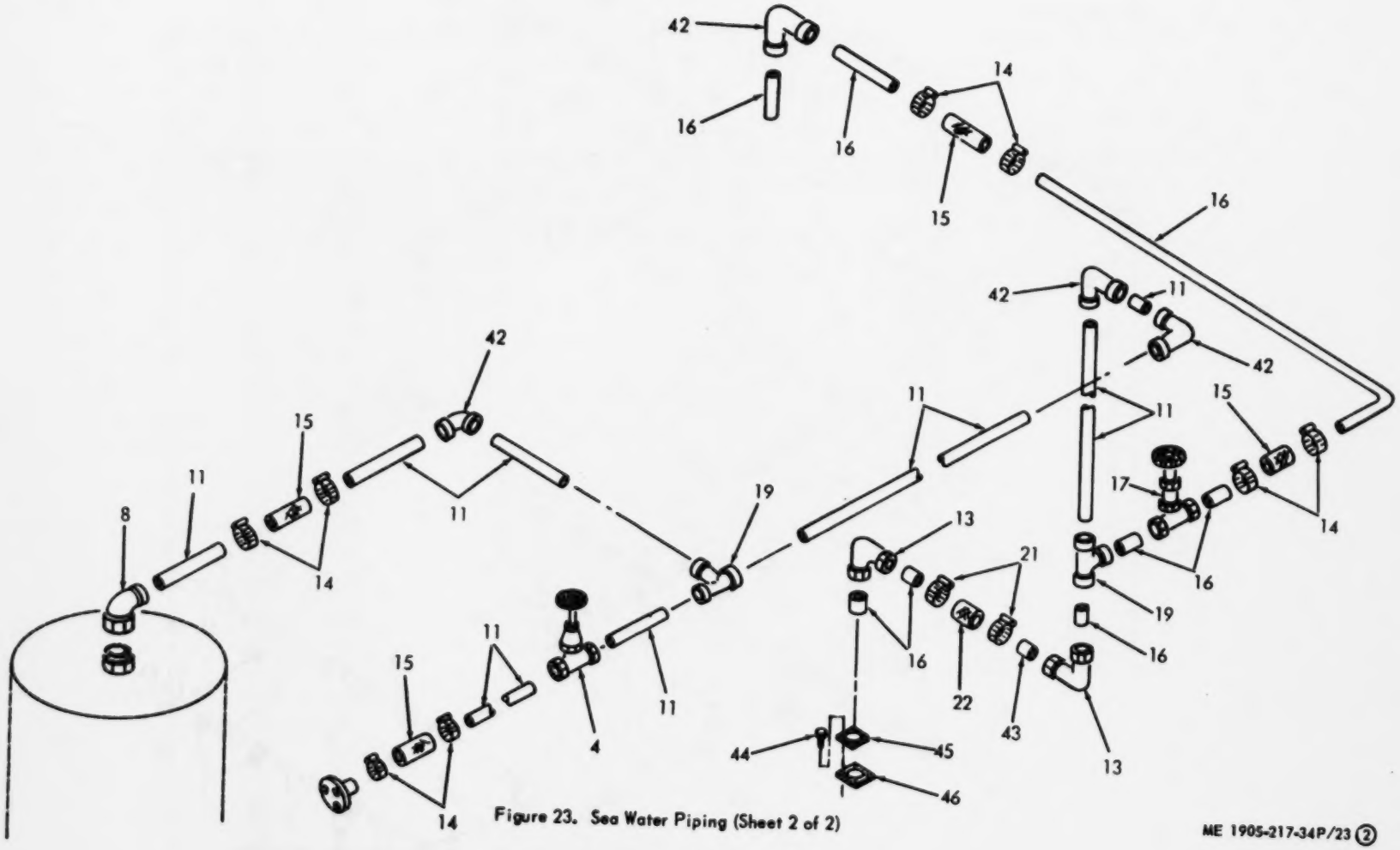

Figure 23. Sea Water Piping (Sheet 2 of 2)

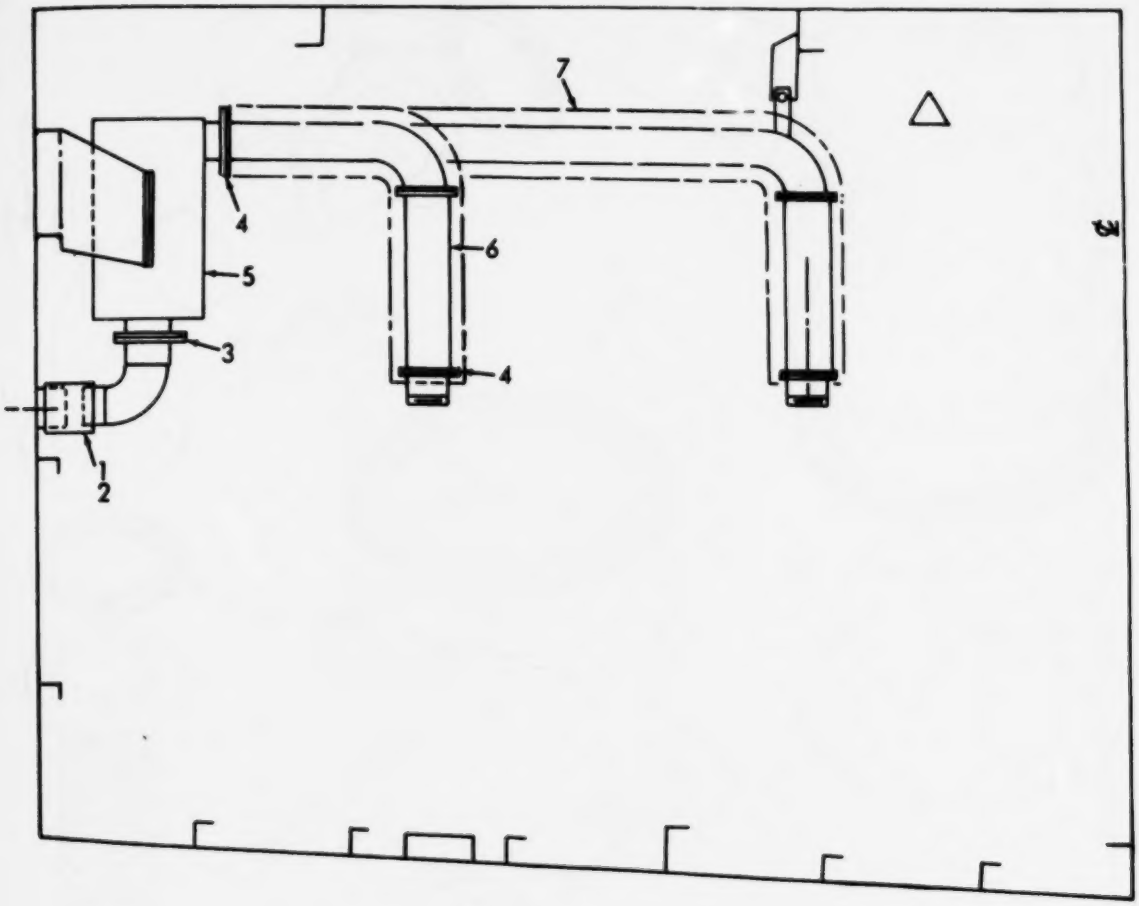

ME 1905-217-34P/24

Figure 24. Muffler and Exhaust Piping

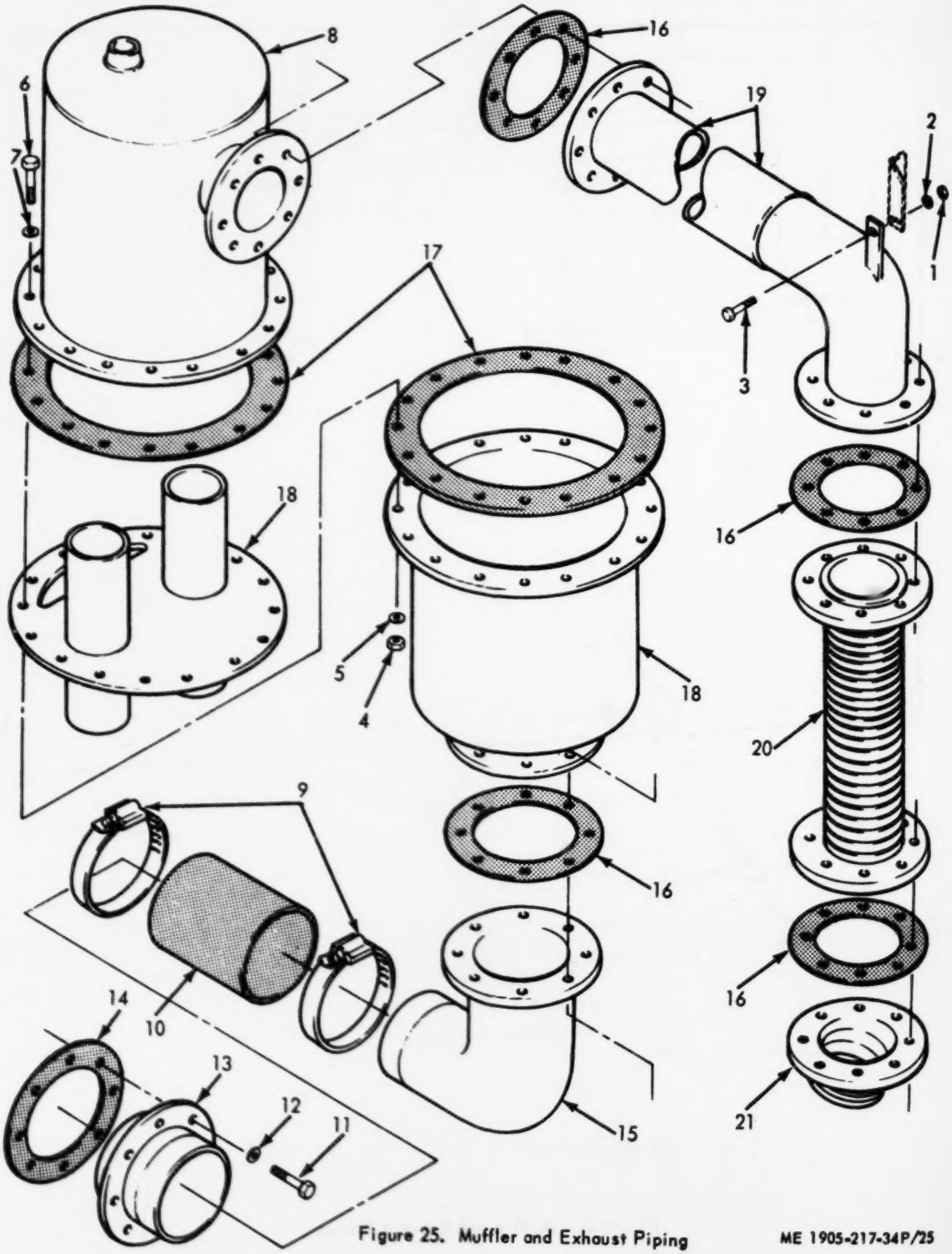

Figure 25. Muffler and Exhaust Piping

ME 1905-217-34P/25

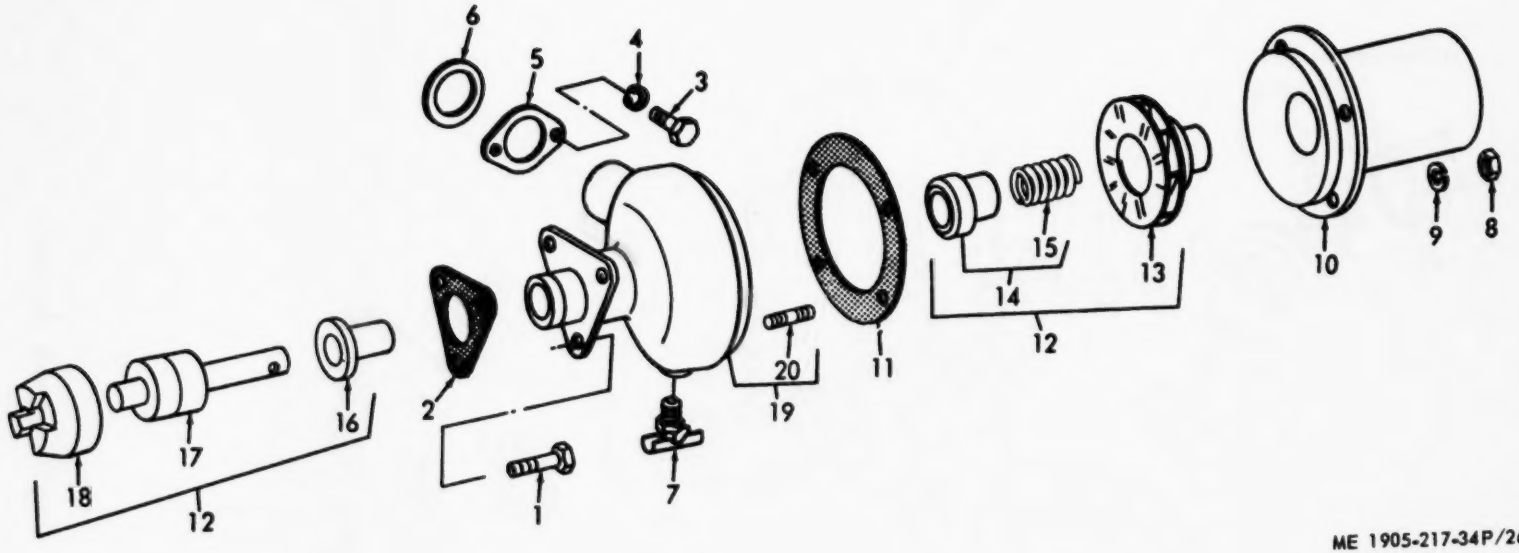

ME 1905-217-34P/26

Figure 26. Fresh Water Pump

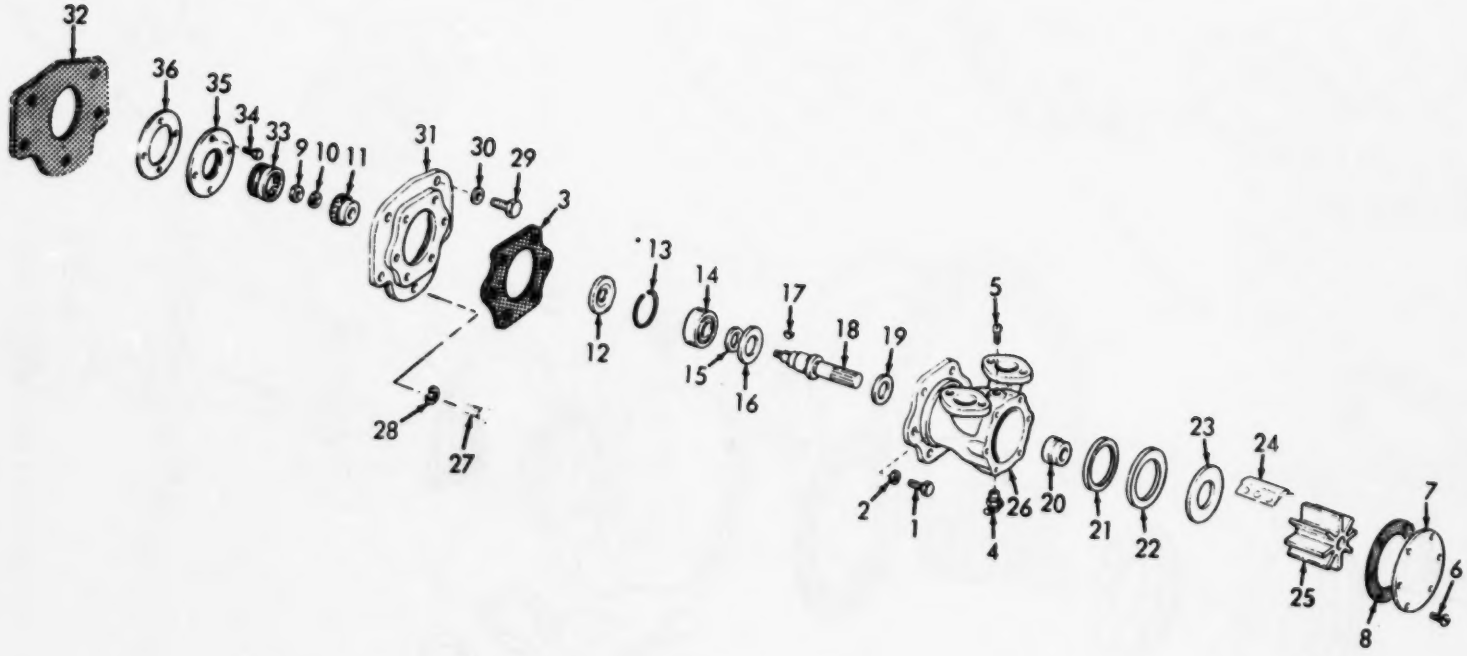

Figure 27. Raw Water Pump

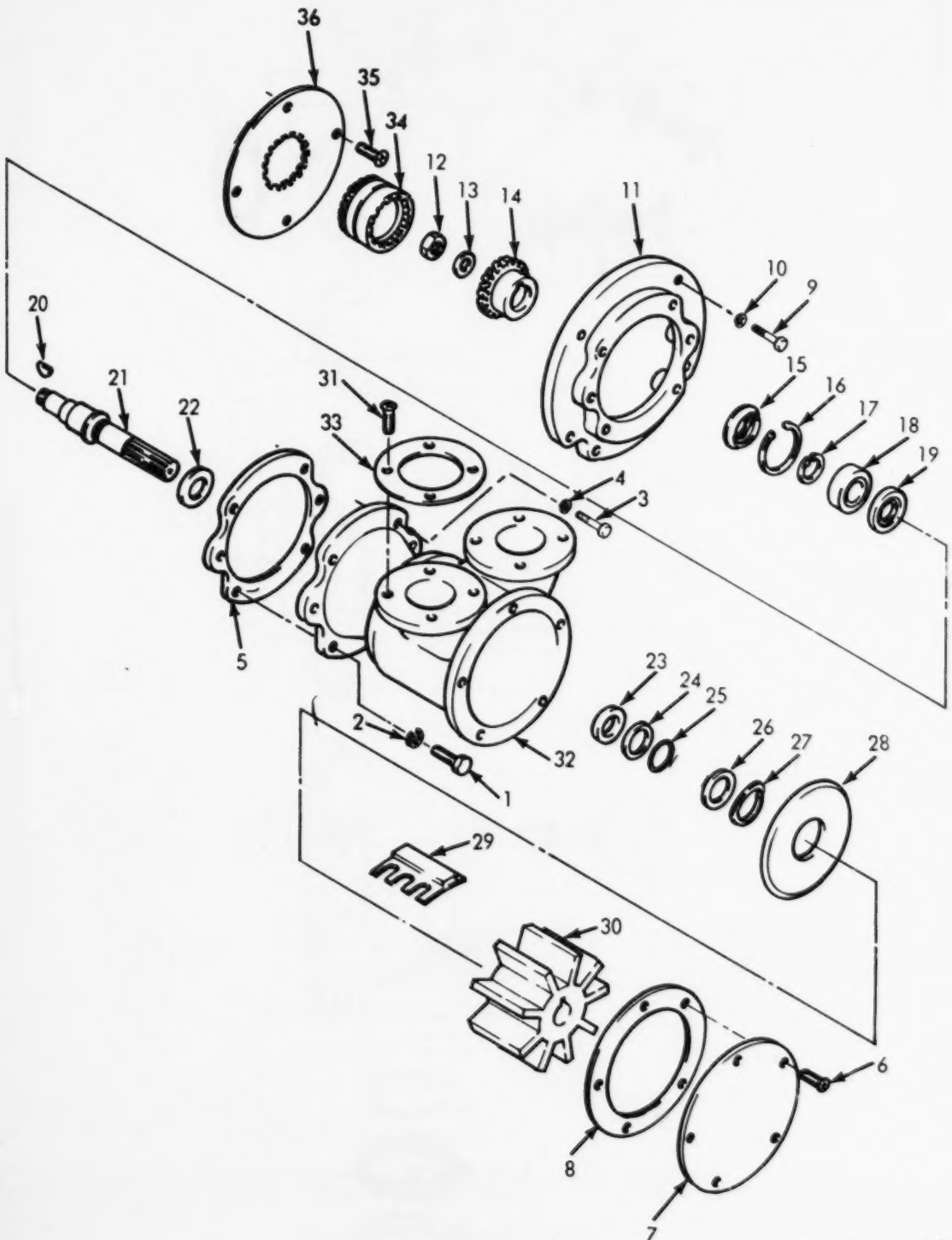

Figure 28. Raw Water Pump

ME 1905-217-34P/28

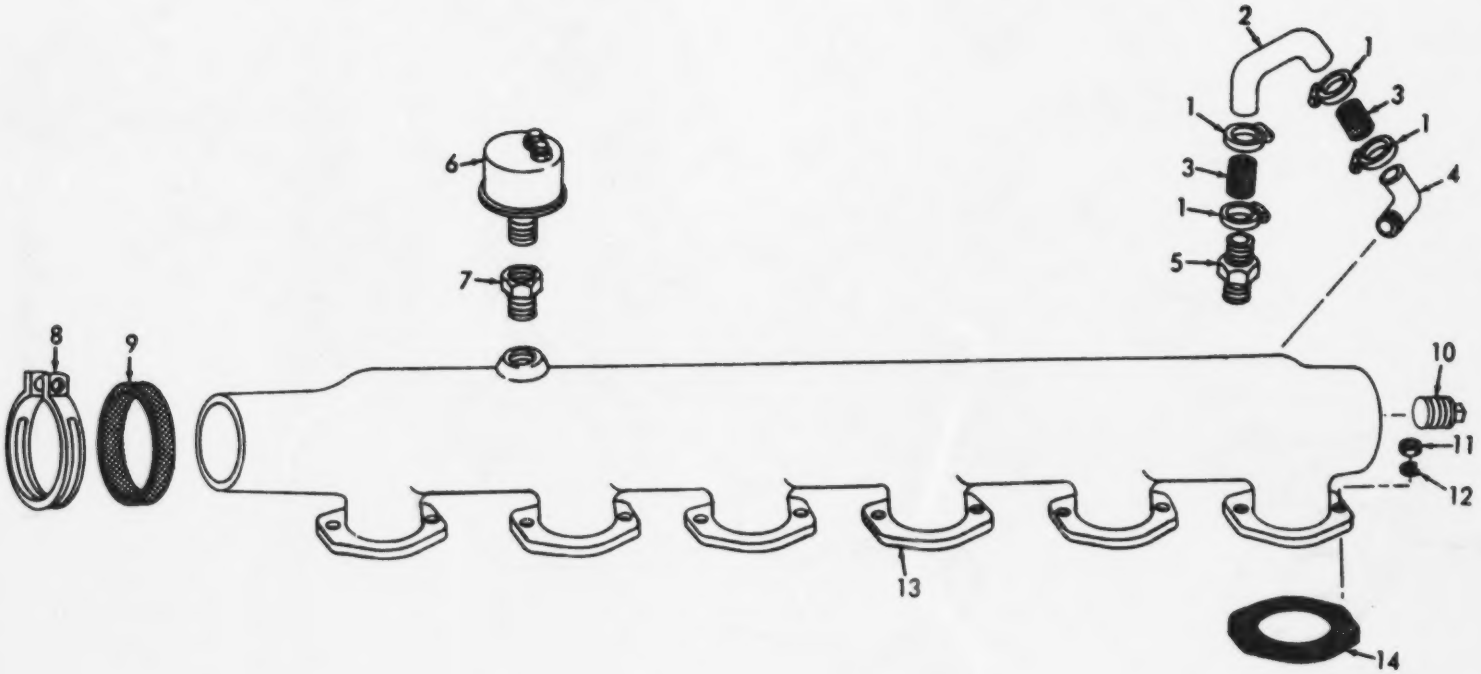

Figure 29. Water Manifold, Engine

ME 1905-217-34P/29

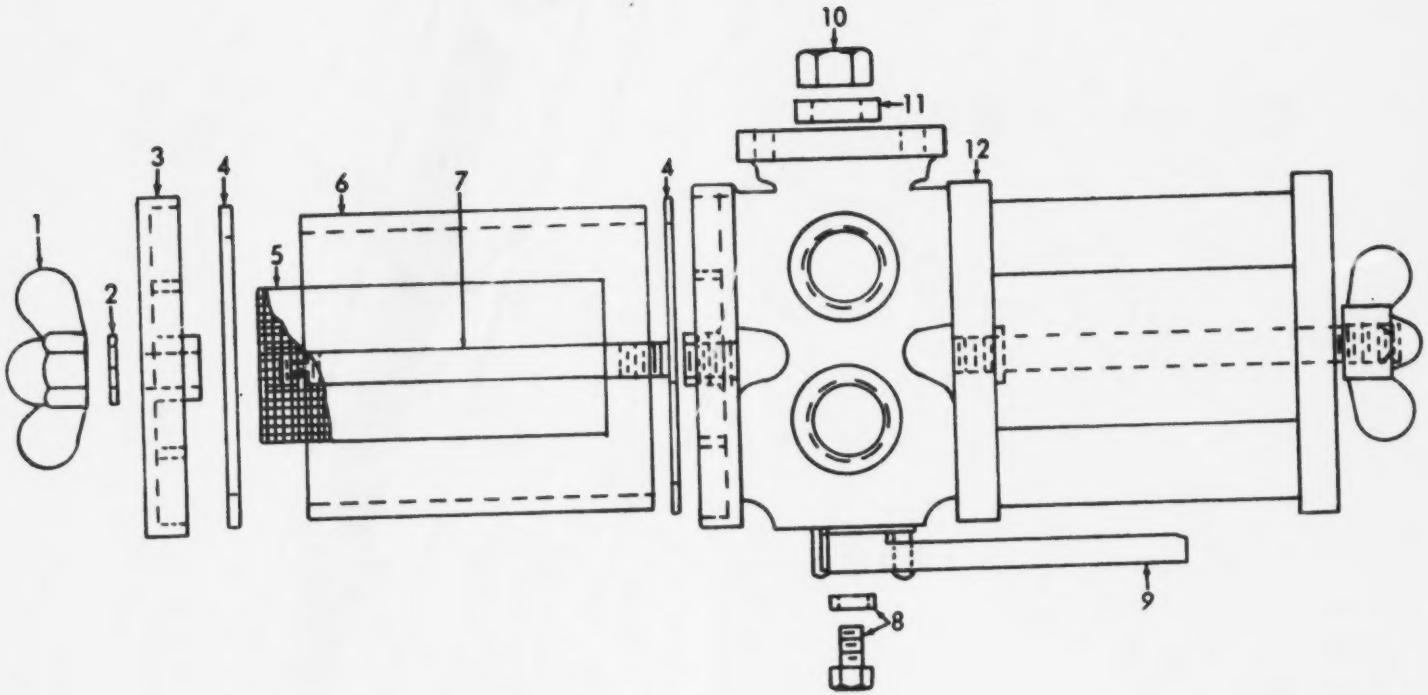

Figure 30. Sea Water Strainer

ME 1905-217-34P/30

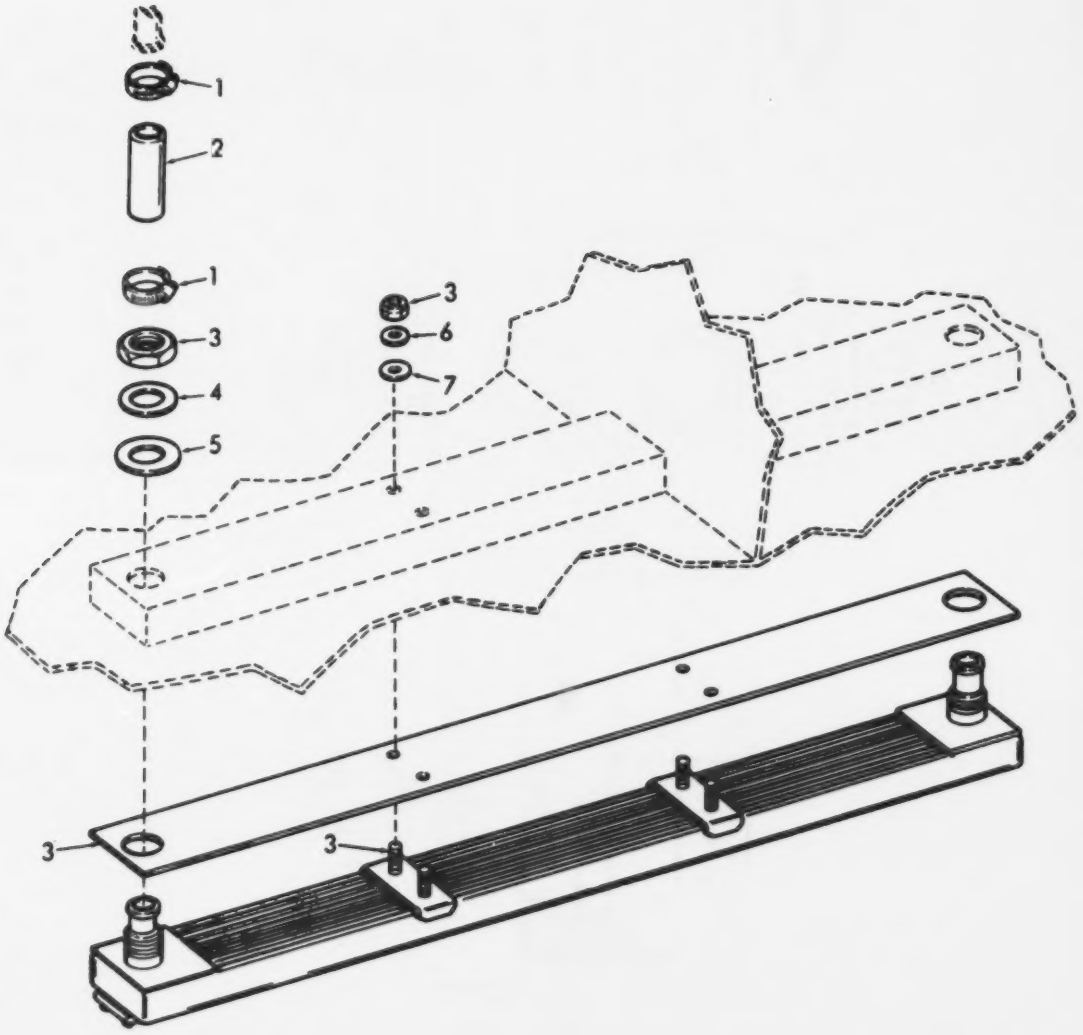

Figure 31. Keel Cooler

ME 1905-217-34P/31

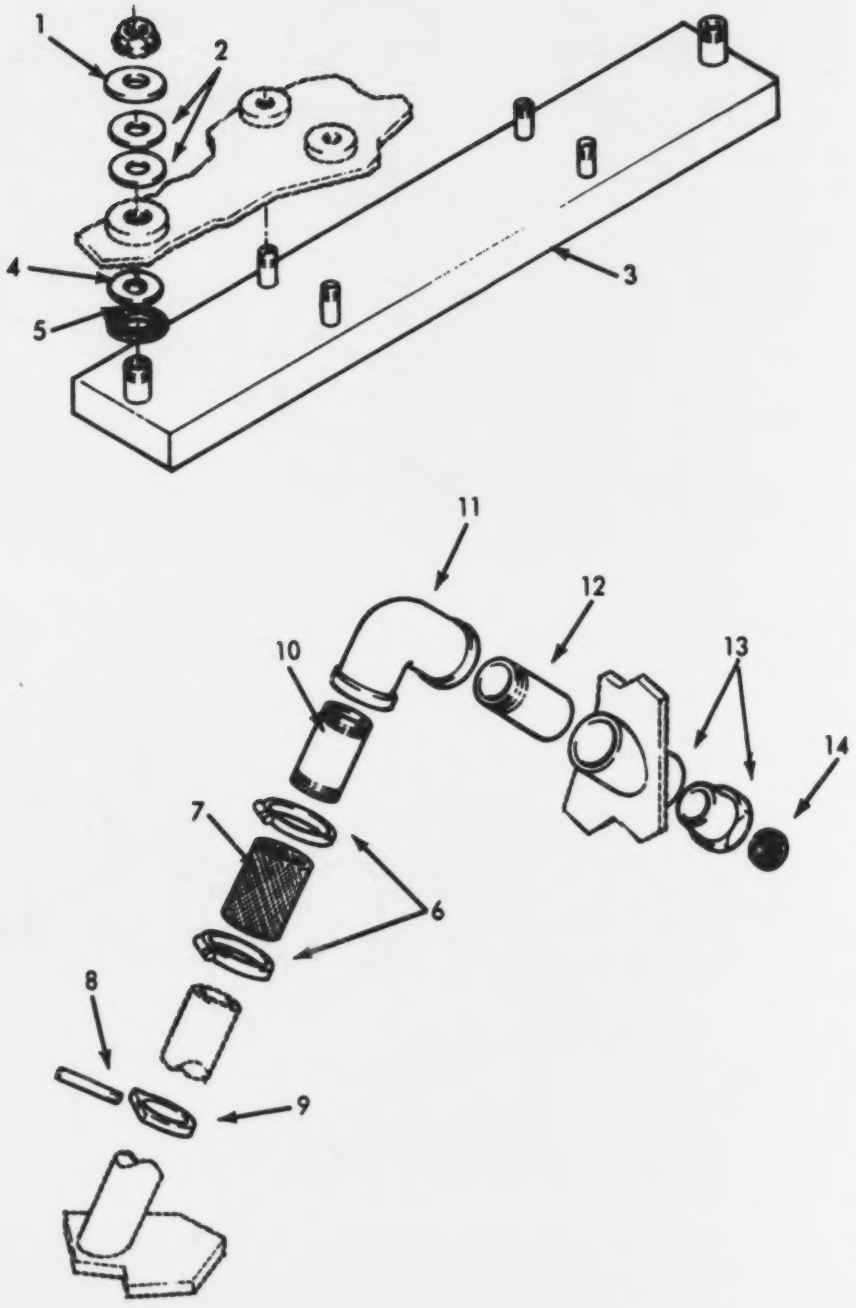

Figure 32. Keel Cooler

ME 1905-217-34P/32

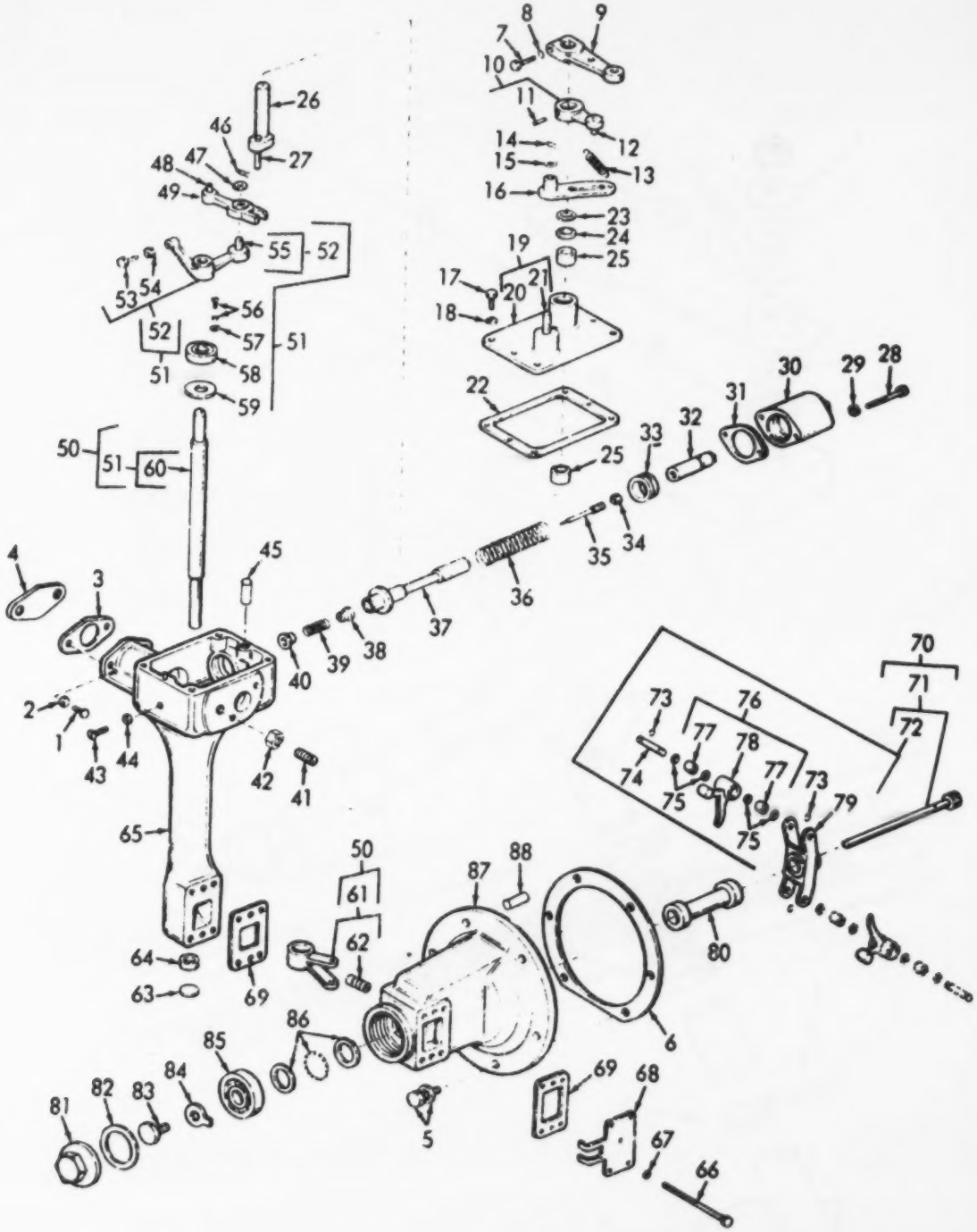

Figure 33. Engine Speed Governor

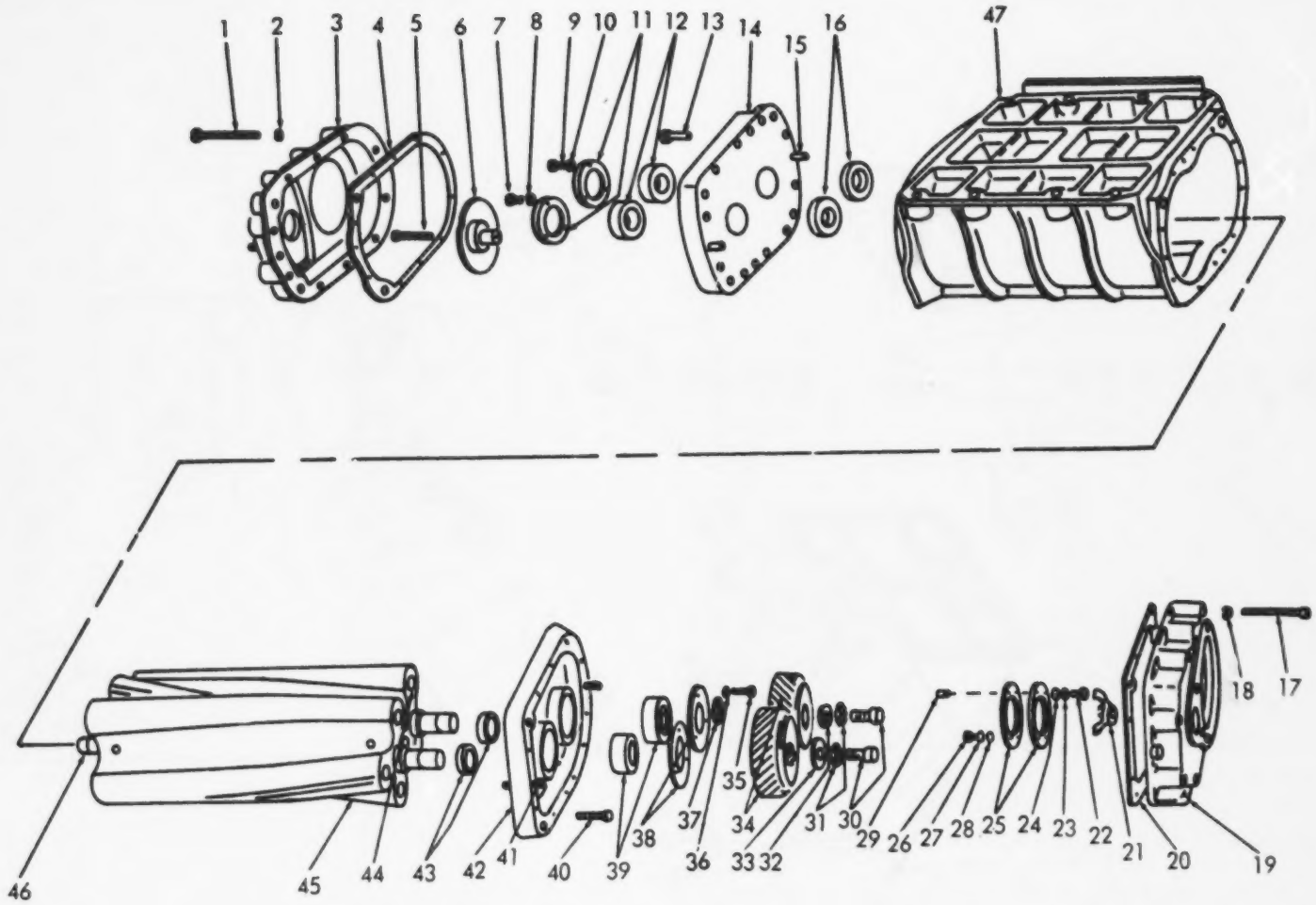

Figure 34. Blower

ME 1905-217-34P/34

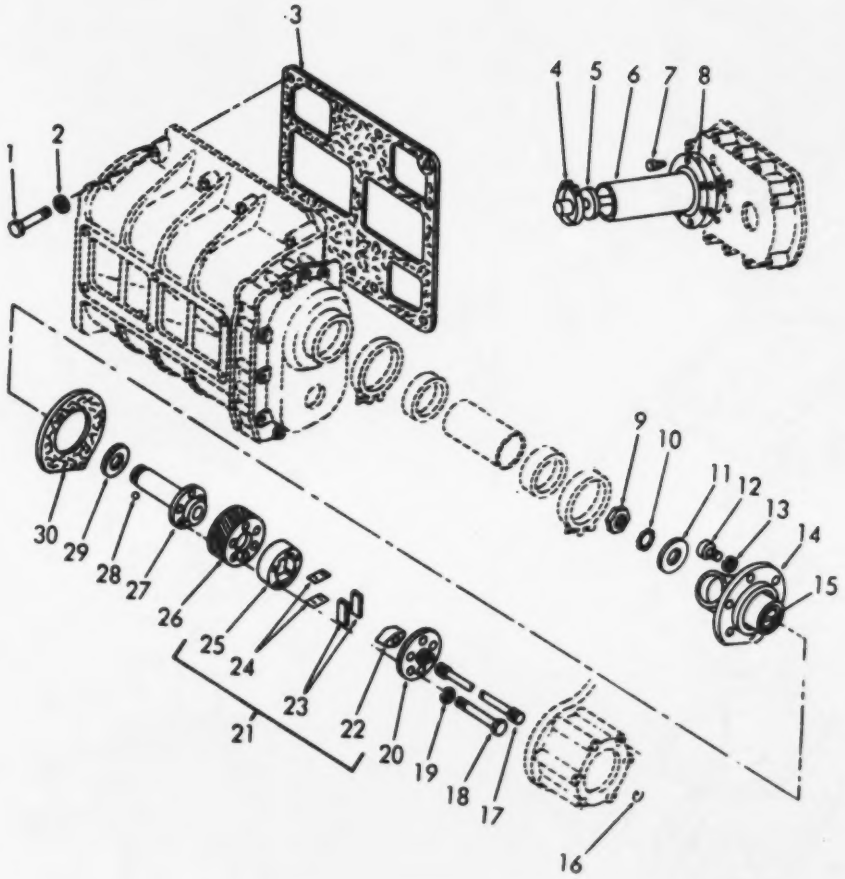

Figure 35. Blower Drive

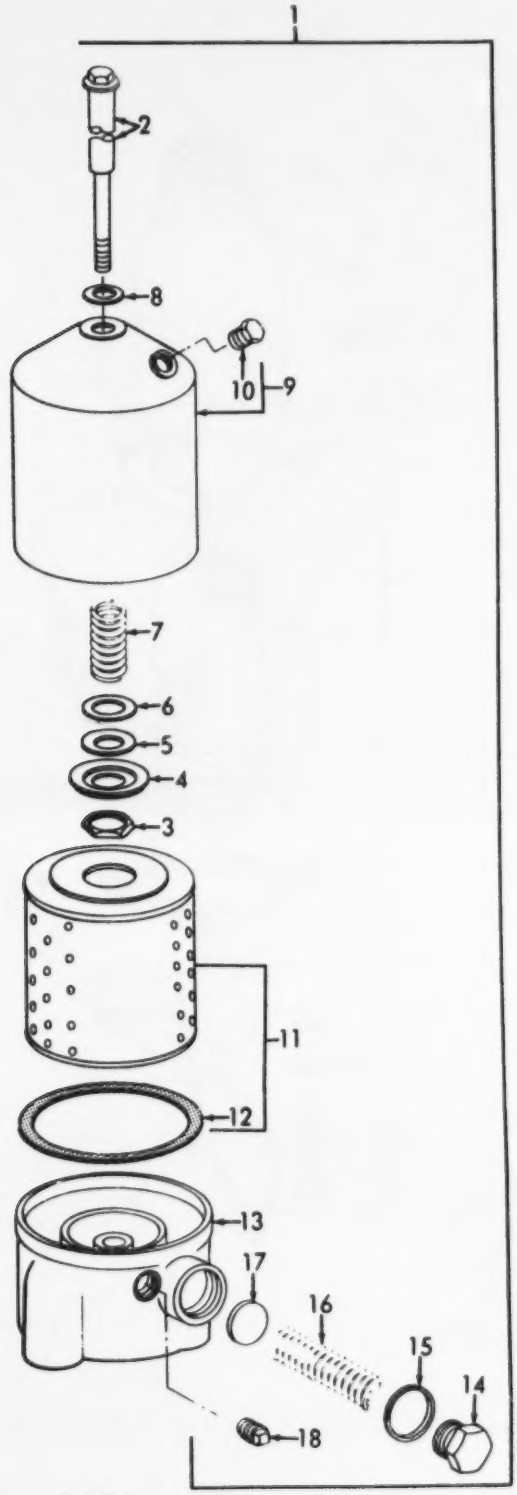

Figure 36. Transmission Oil Filter

ME 1905-217-34P/36

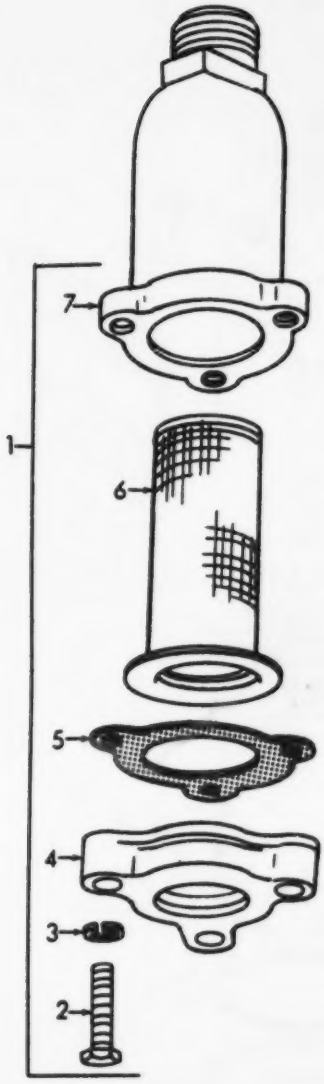

Figure 37. Transmission Oil Strainer

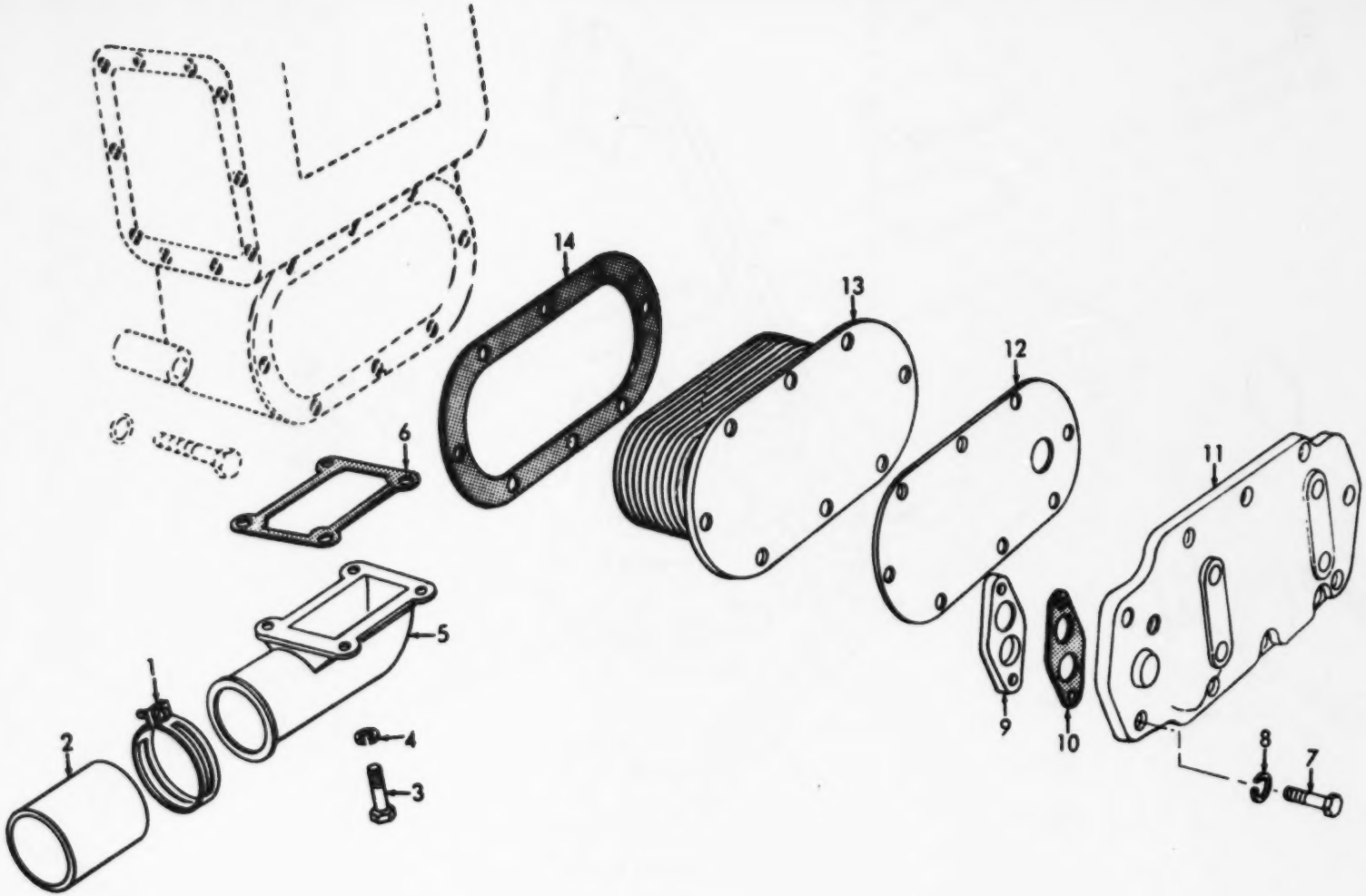

Figure 38. Transmission Oil Cooler Core and Plate

ME 1905-217-34P/38

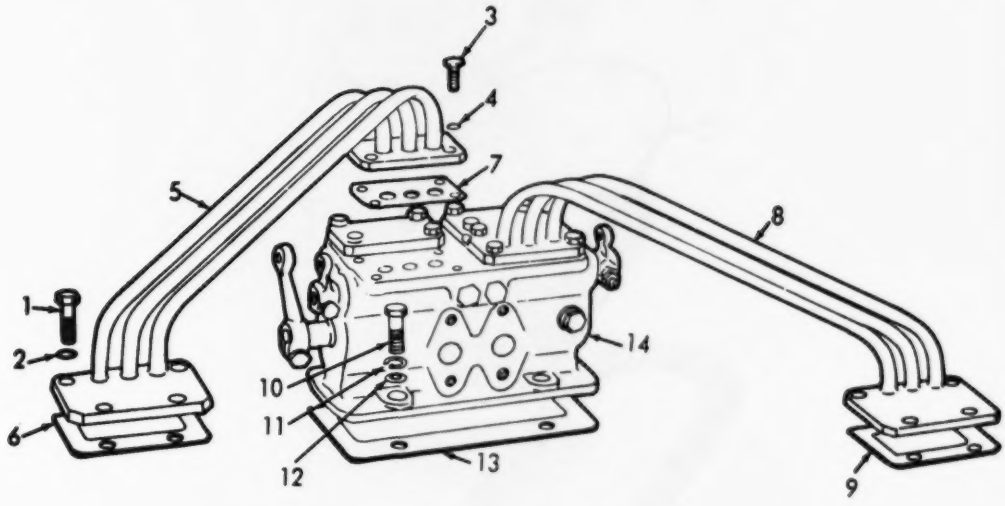

Figure 39. Transmission Control Valve and Tubes

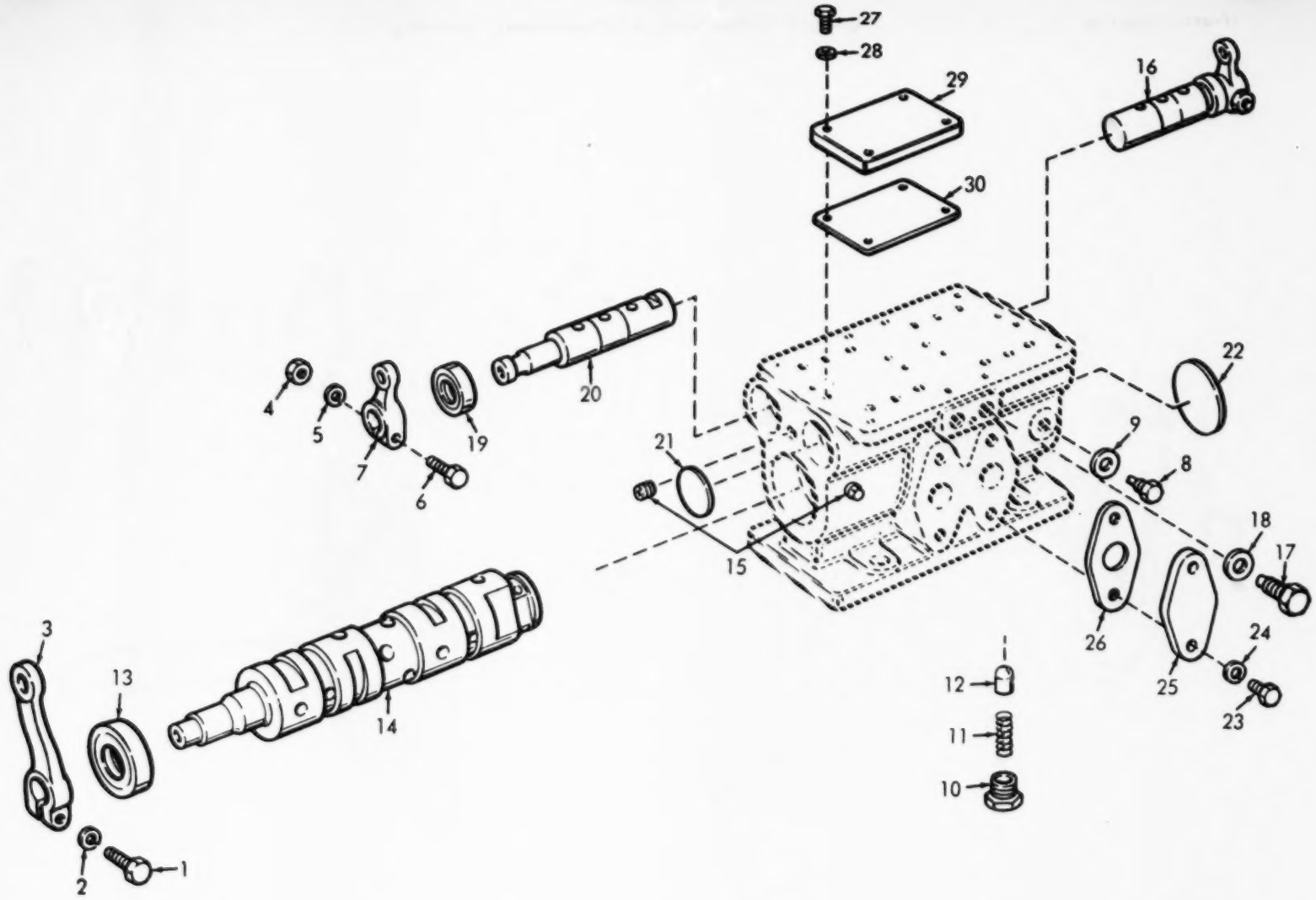

Figure 40. Transmission Control Valve

ME 1905-217-34P/40

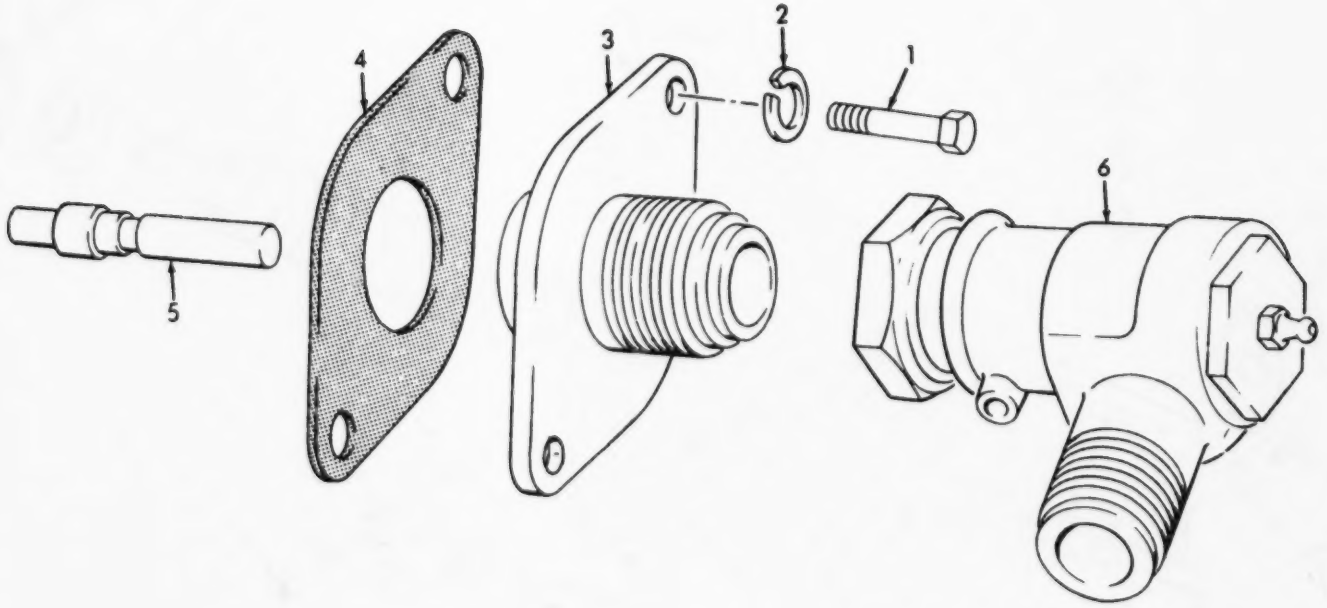

Figure 41. Tachometer Drive Cable, Adapter and Shaft

ME 1905-217-34P/41

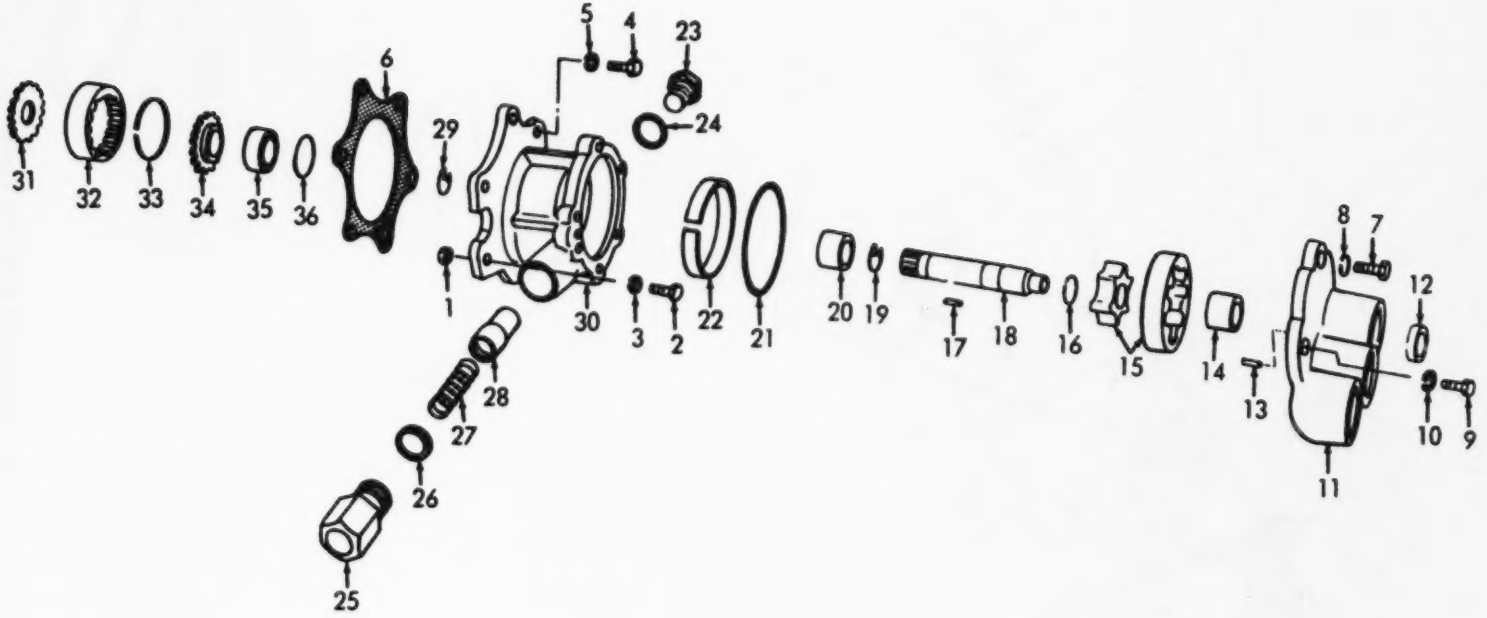

Figure 42. Transmission Oil Pump

ME 1905-217-34P/42

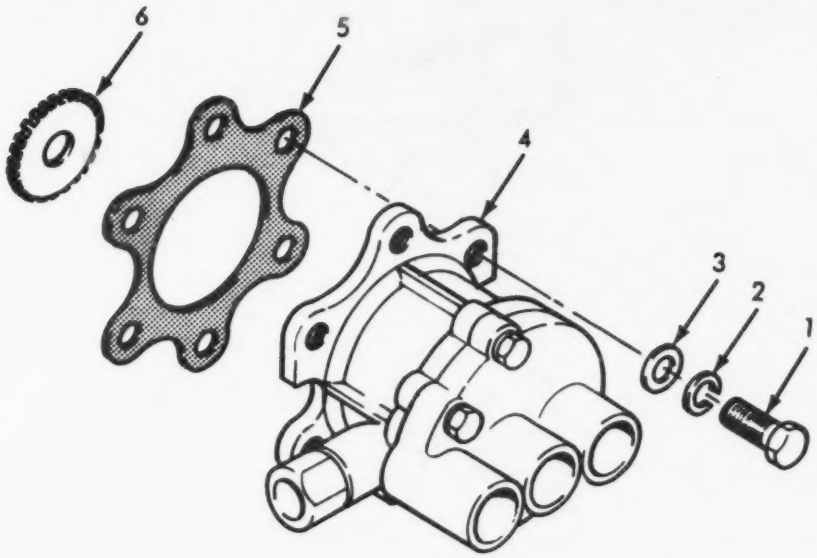

Figure 43. Transmission Oil Pump and Lines

ME 1905-217-34P/43

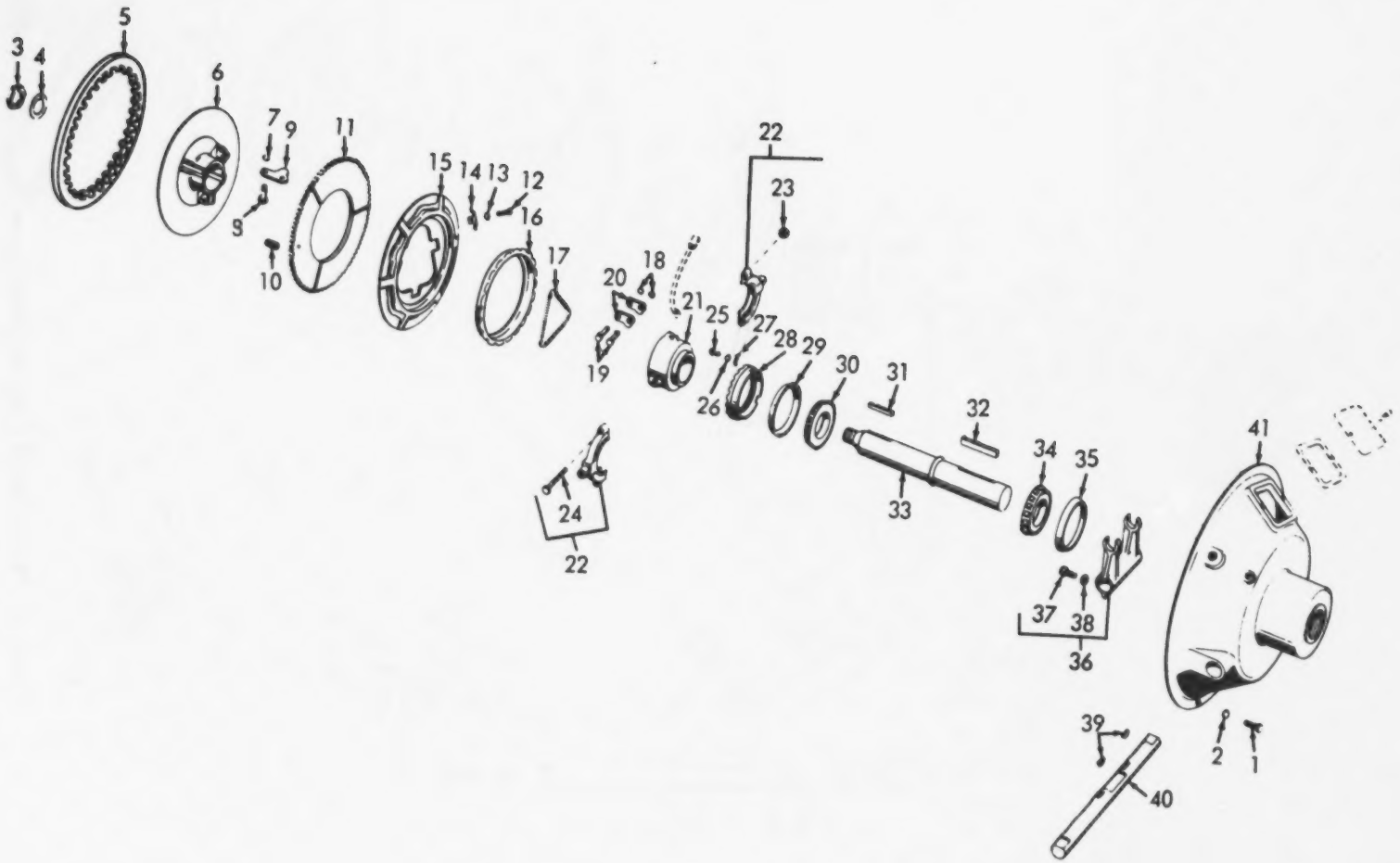

Figure 44. Power Take-Off

ME 1905-217-34P/44

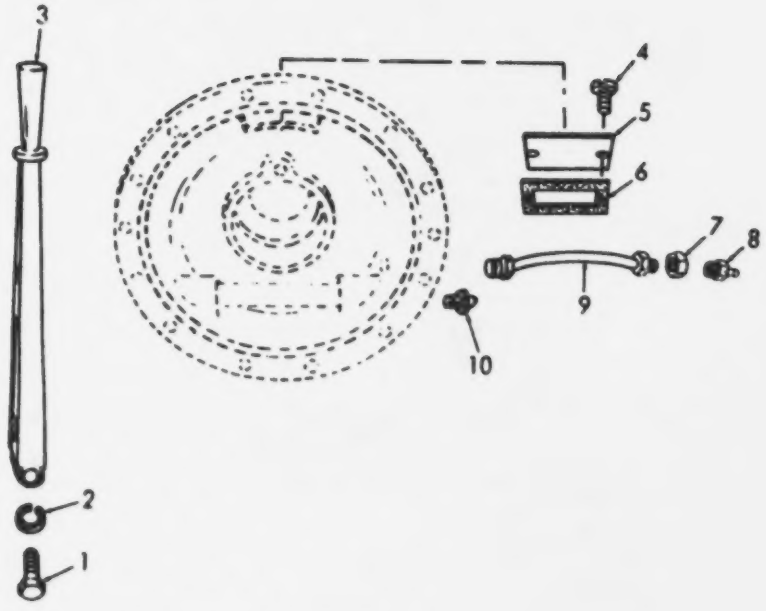

Figure 45. Power Take-Off Cover and Control Lever ME 1905-217-34P/45

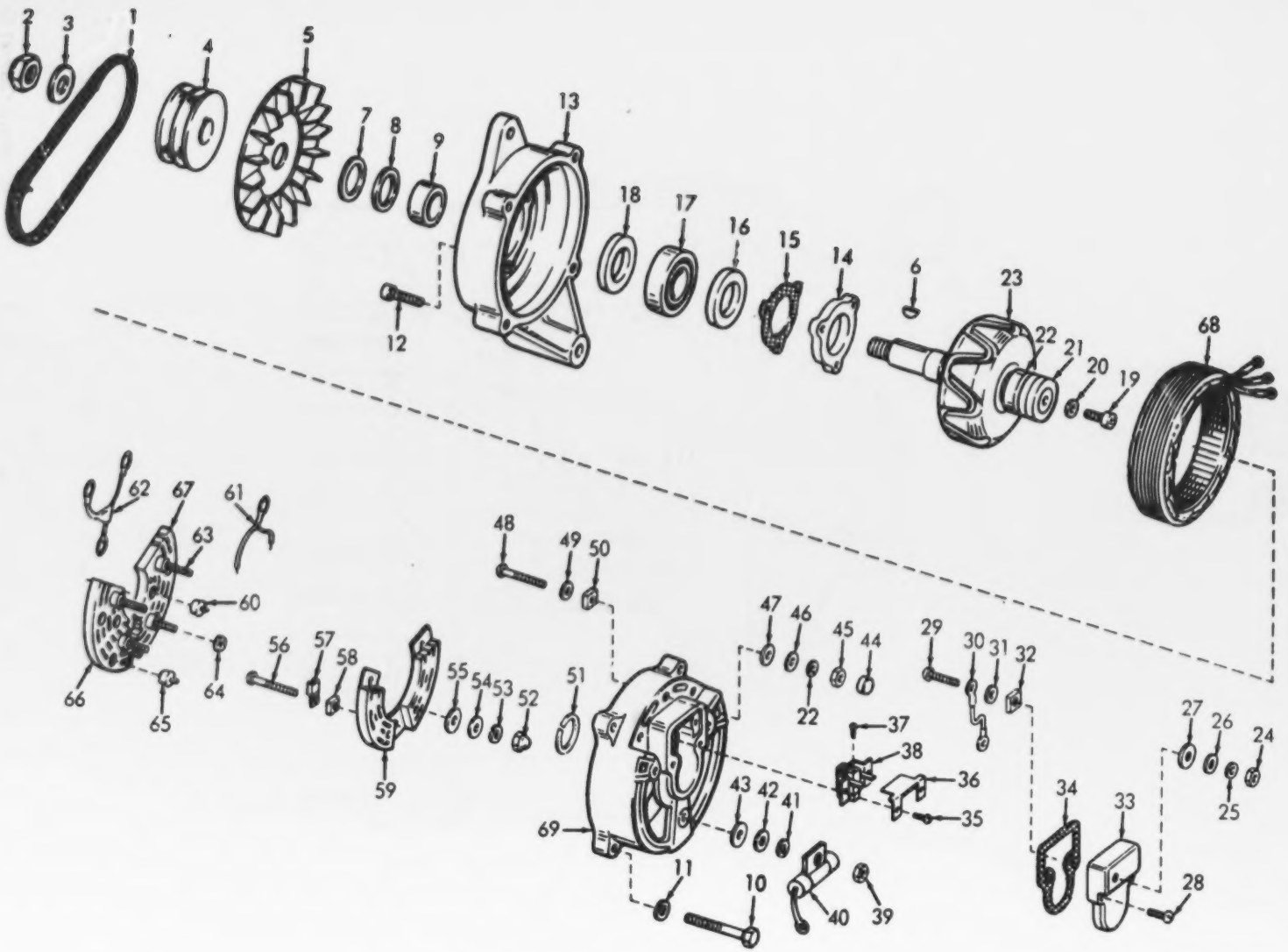

Figure 46. Alternator, Regulator and Voltage Protector

ME 1905-217-34P/46

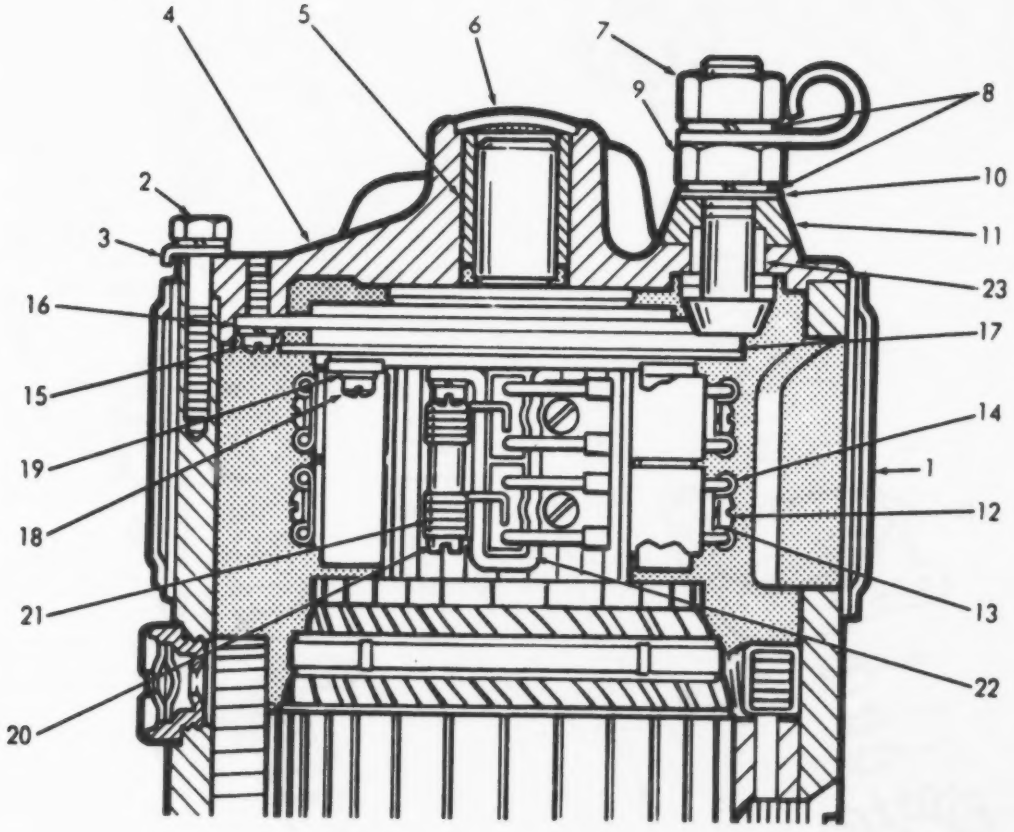

Figure 47. Electric Cranking Motor (Sheet 1 of 3)

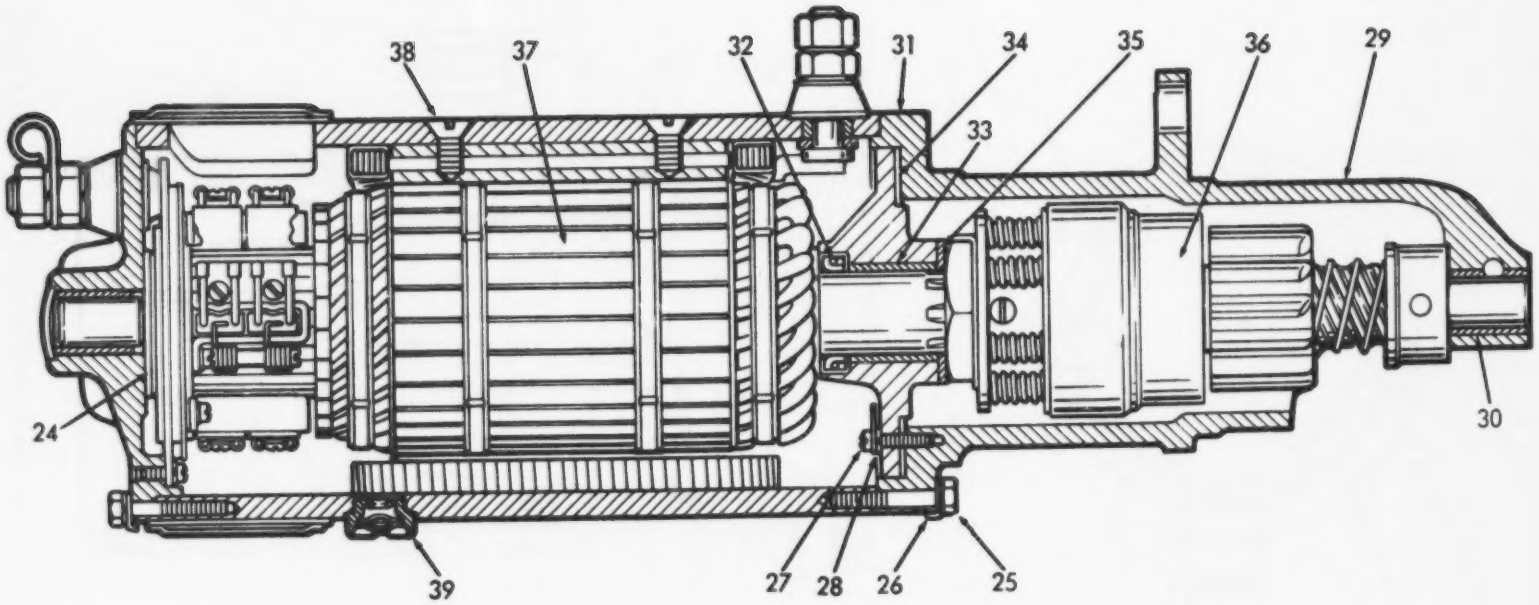

Figure 47. Electric Cranking Motor (Sheet 2 of 3)

ME 1905-217-34ᴰ/47 ②

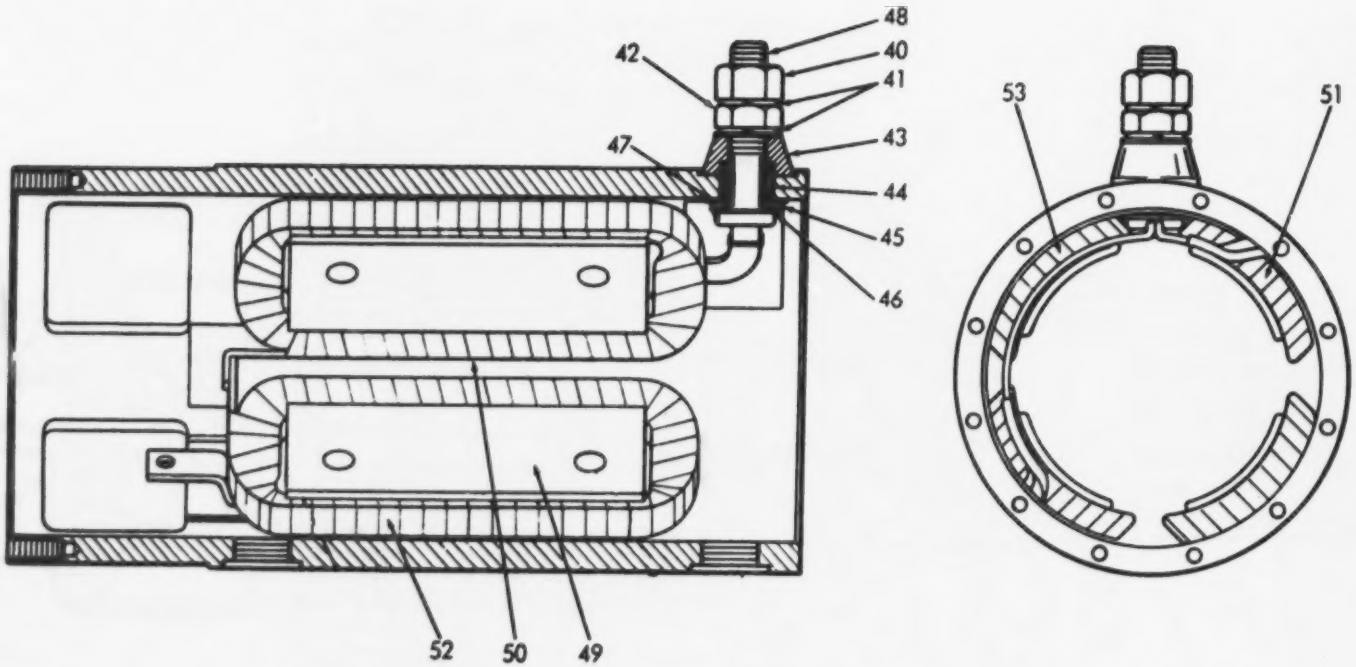

Figure 47. Electric Cranking Motor (Sheet 3 of 3)

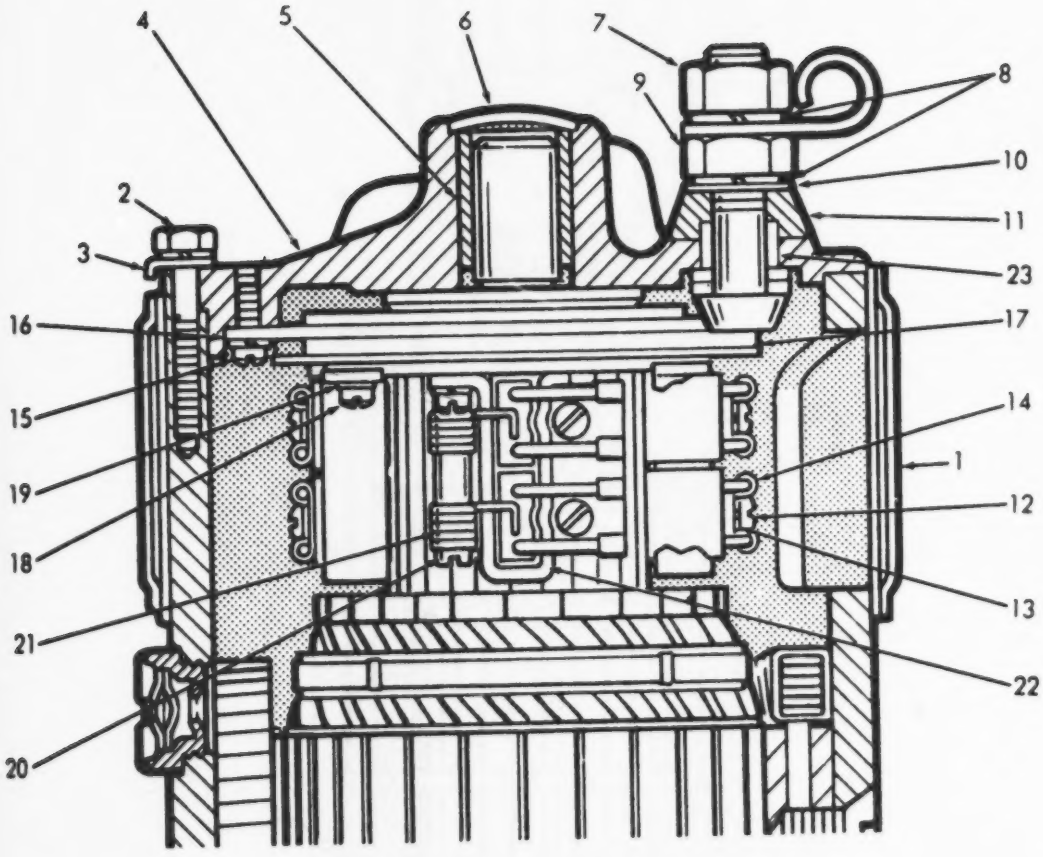

Figure 48. Electric Cranking Motor (Sheet 1 of 3) ME 1905-217-34P/48 ①

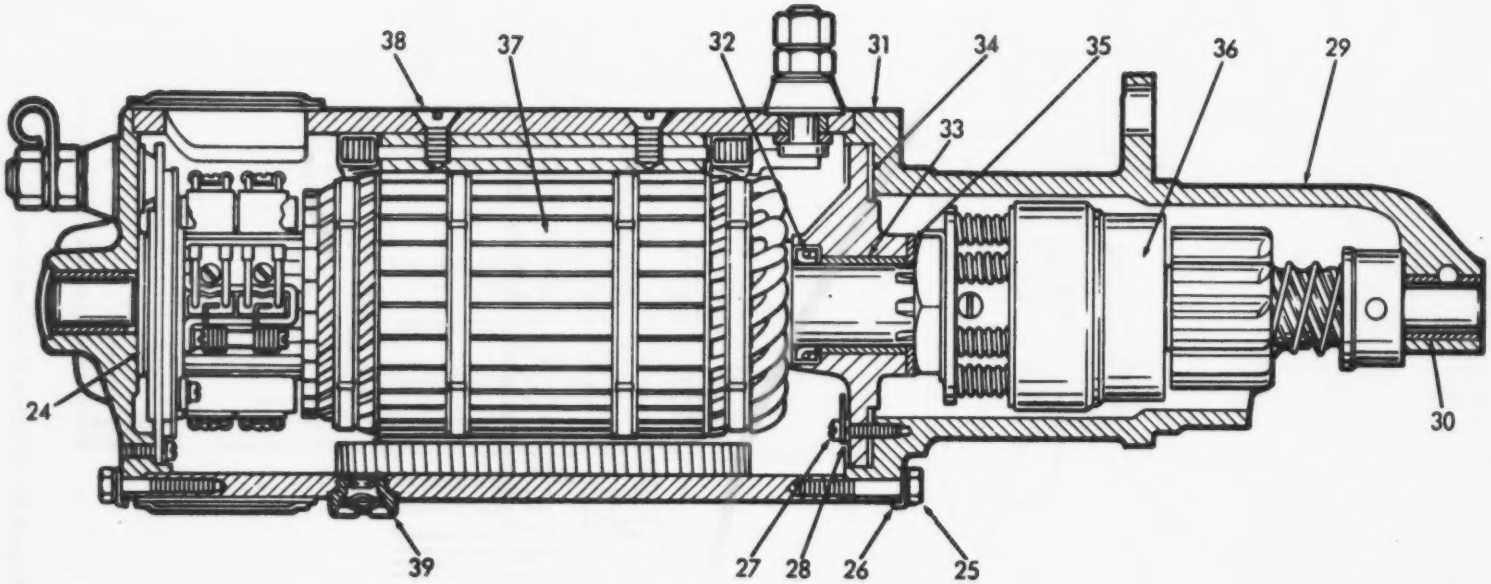

Figure 48. Electric Cranking Motor (Sheet 2 of 3)

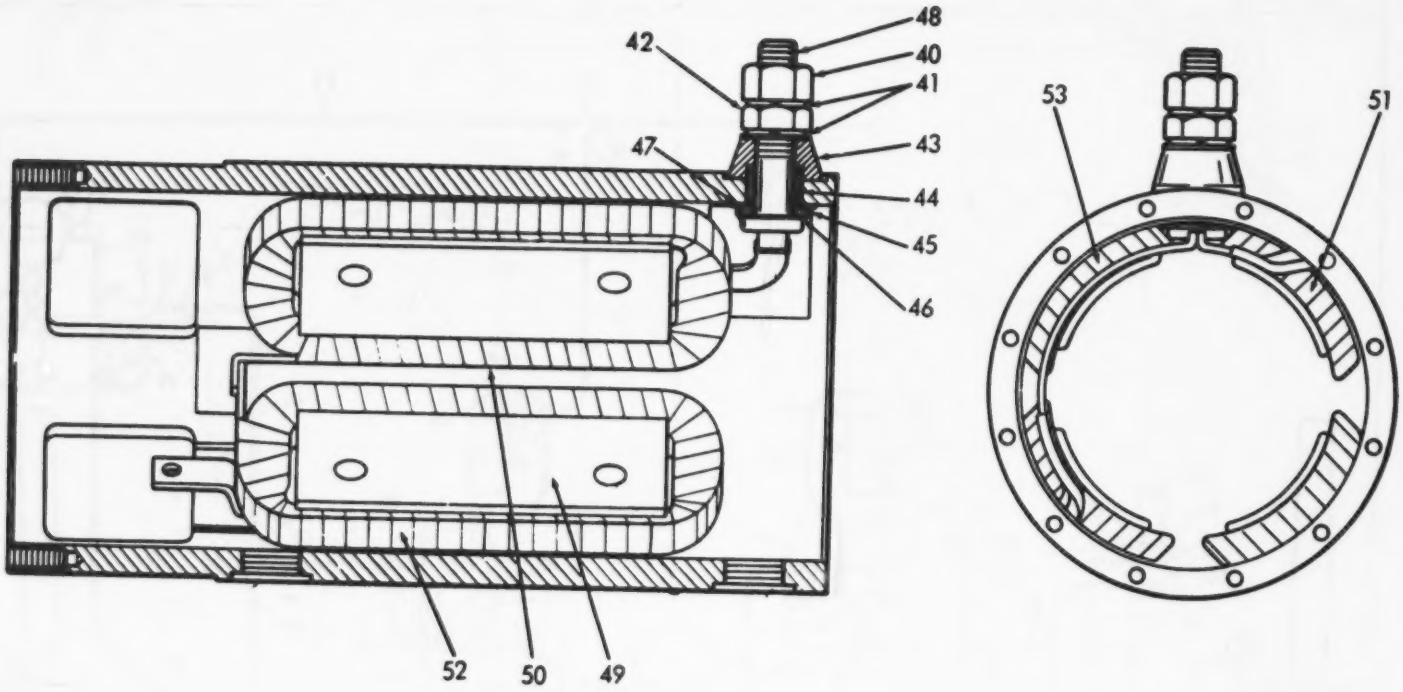

Figure 48. Electric Cranking Motor (Sheet 3 of 3)

ME 1905-217-34P/48 (4)

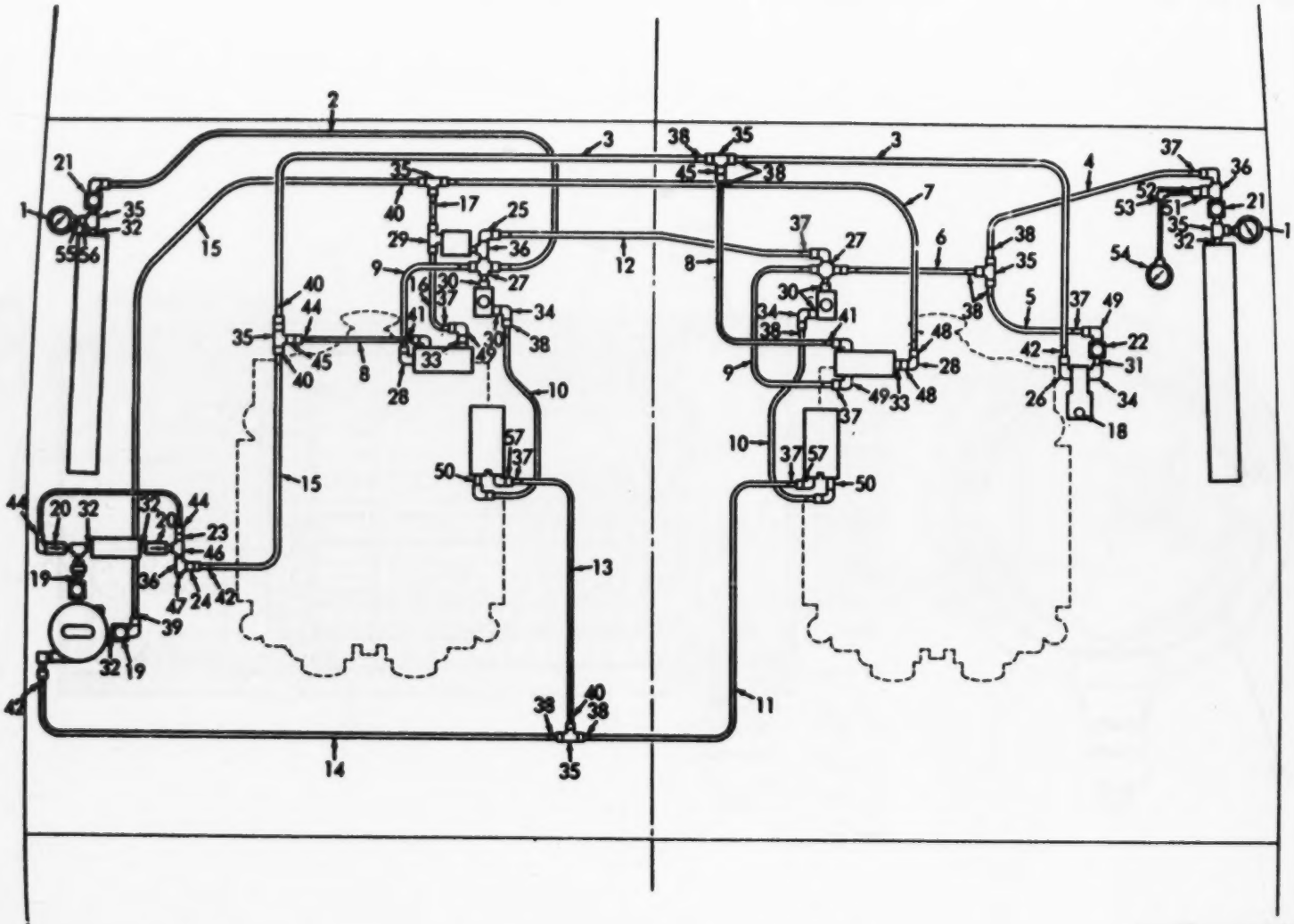

Figure 49. Hydraulic Starting Piping System

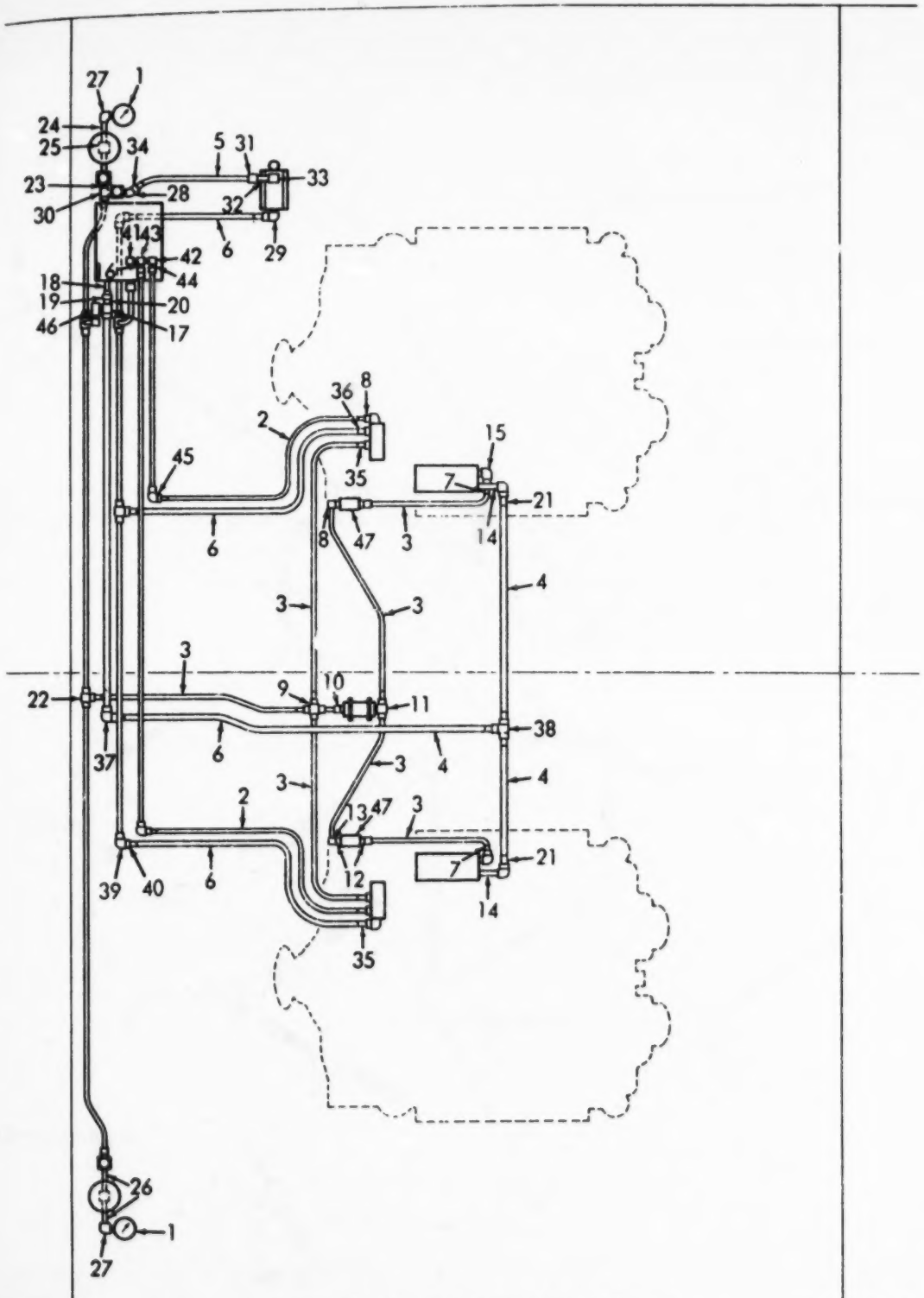

Figure 50. Hydraulic Starting Piping System

ME 1905-217-34P/50

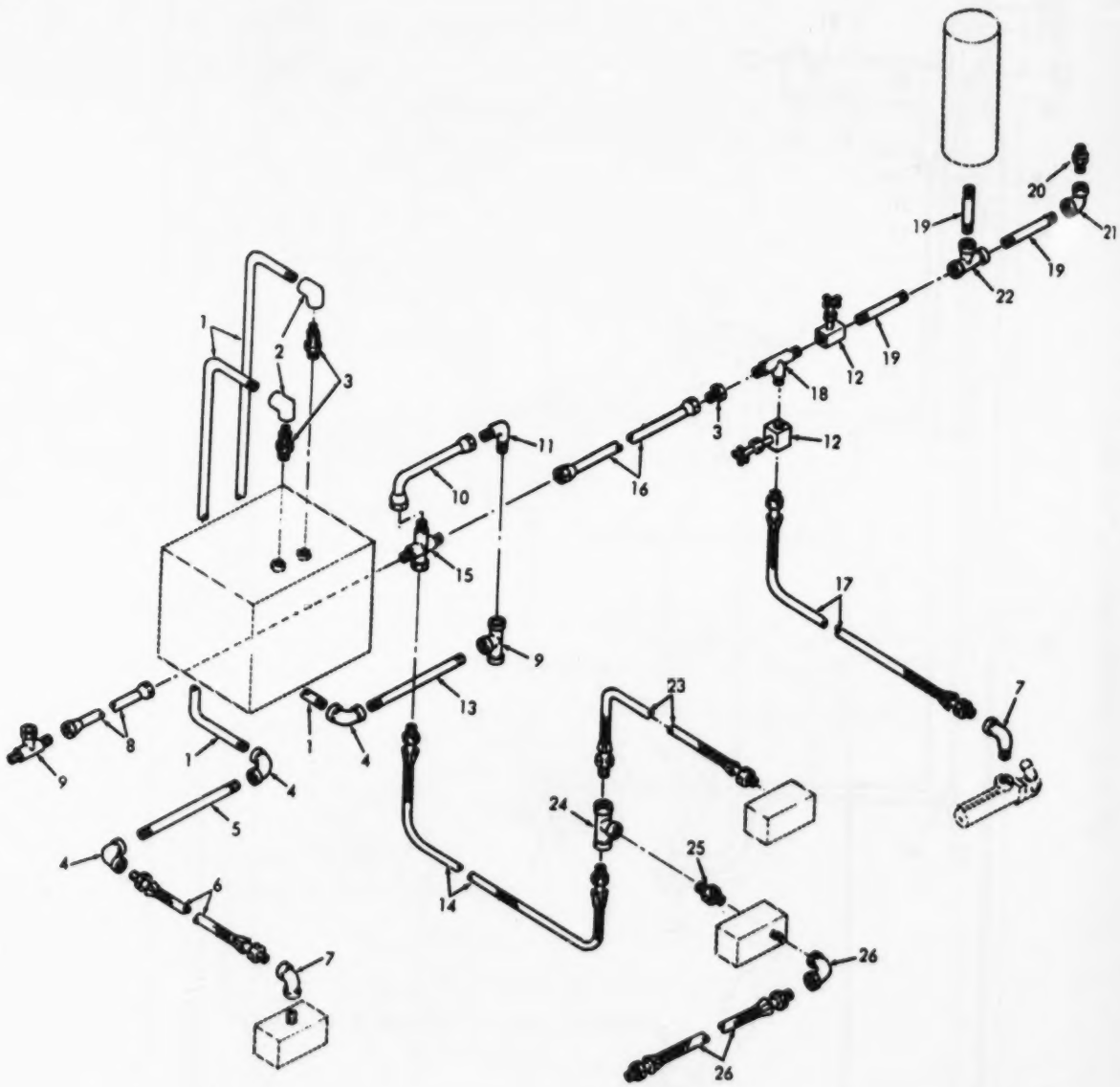

Figure 51. Hydraulic Starting Piping System (Sheet 1 of 2)

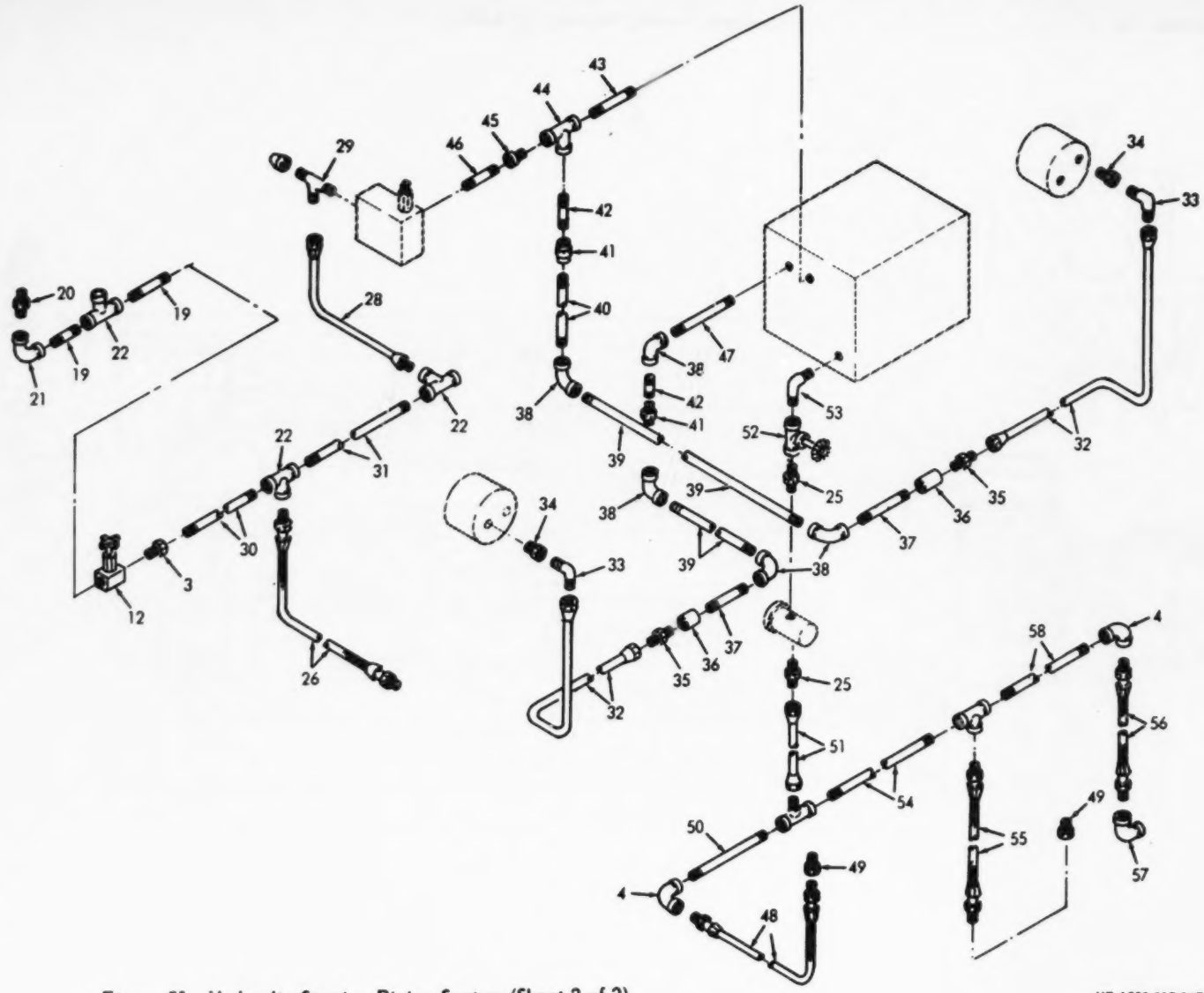

Figure 51. Hydraulic Starting Piping System (Sheet 2 of 2)

ME 1905-217-34P/51 ②

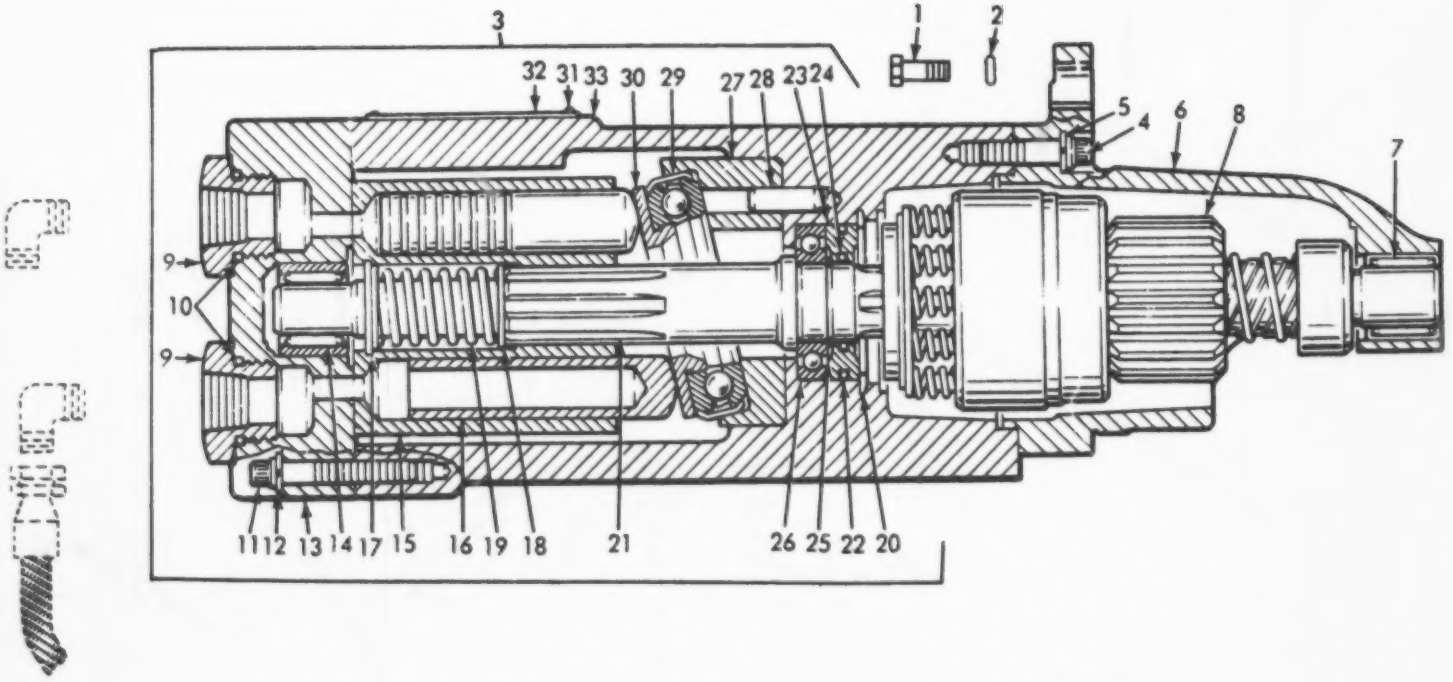

Figure 52. Starting Engine, Hydraulic

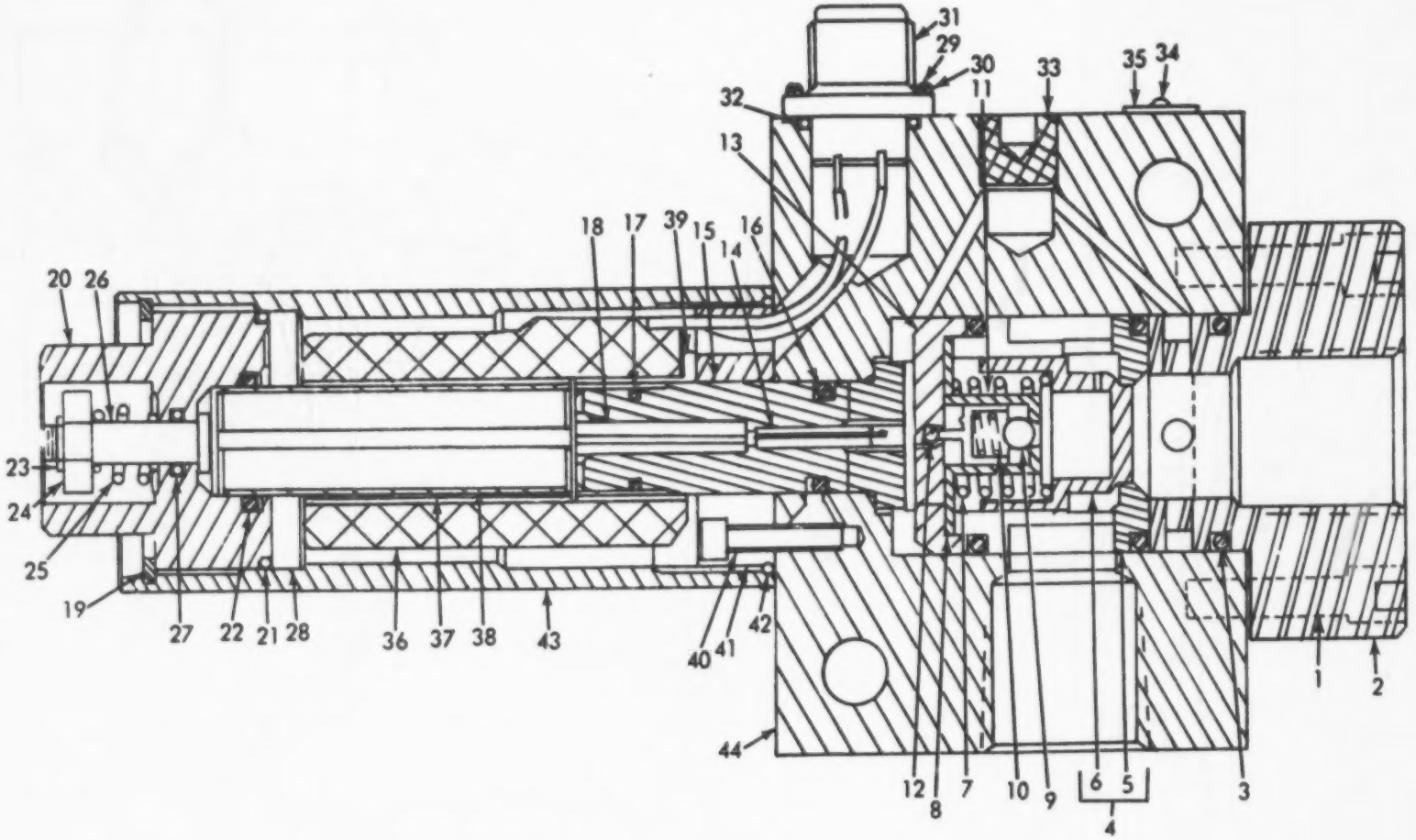

Figure 53. Solenoid Valve, Starting Motor

ME 1905-217-34P/53

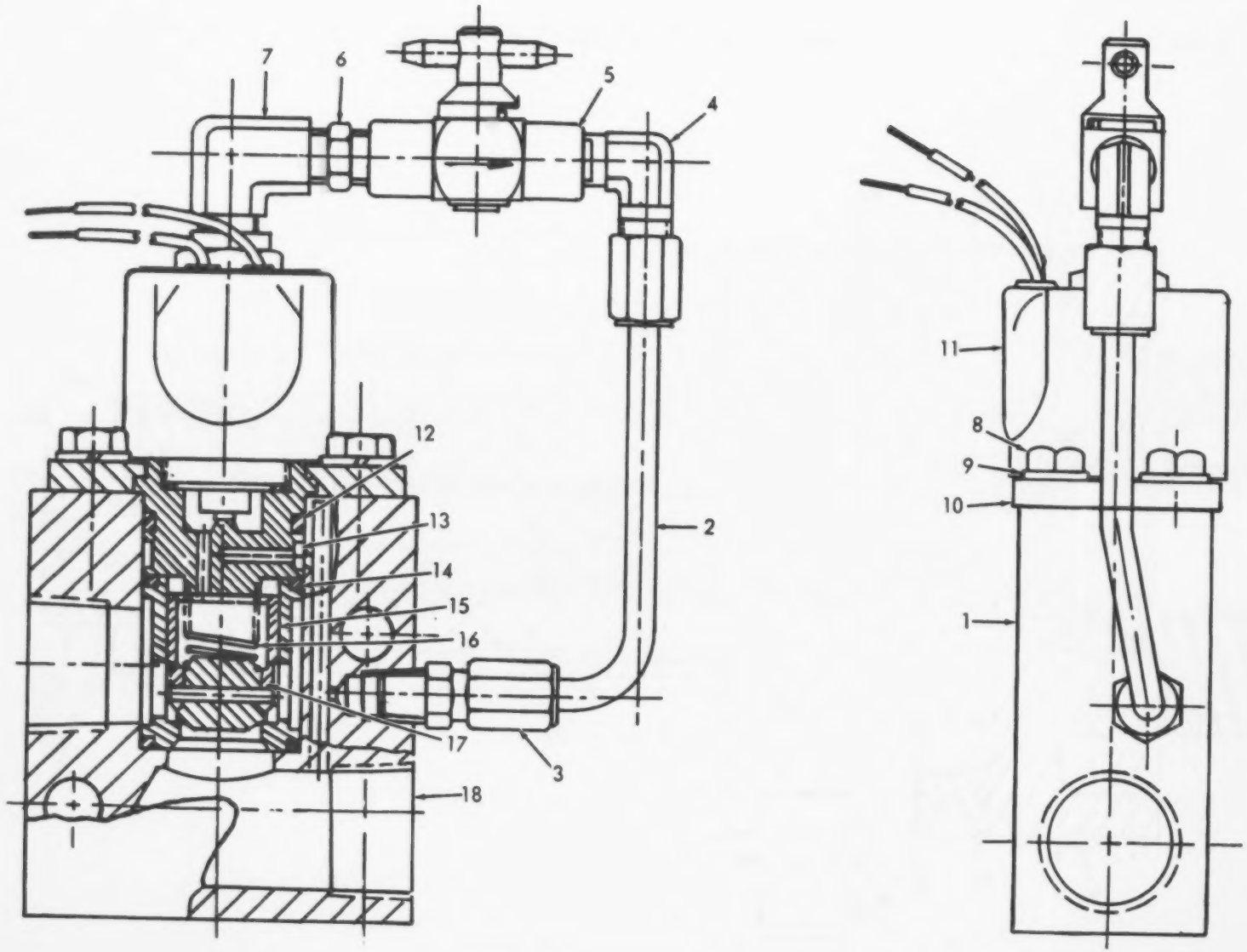

Figure 54. Solenoid Valve, Starting Motor

ME 1905-217-34P/54

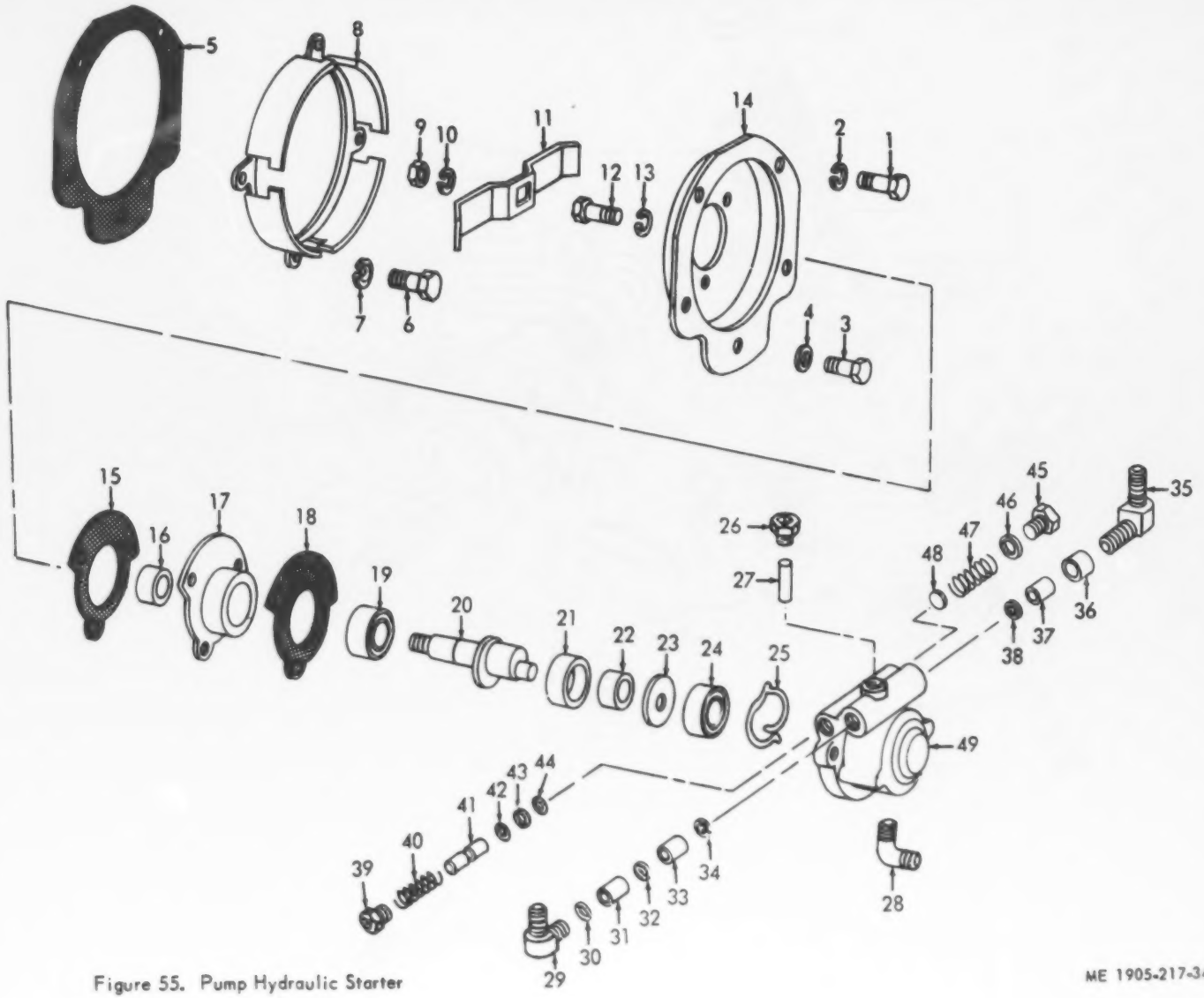

Figure 55. Pump Hydraulic Starter

ME 1905-217-34P/55

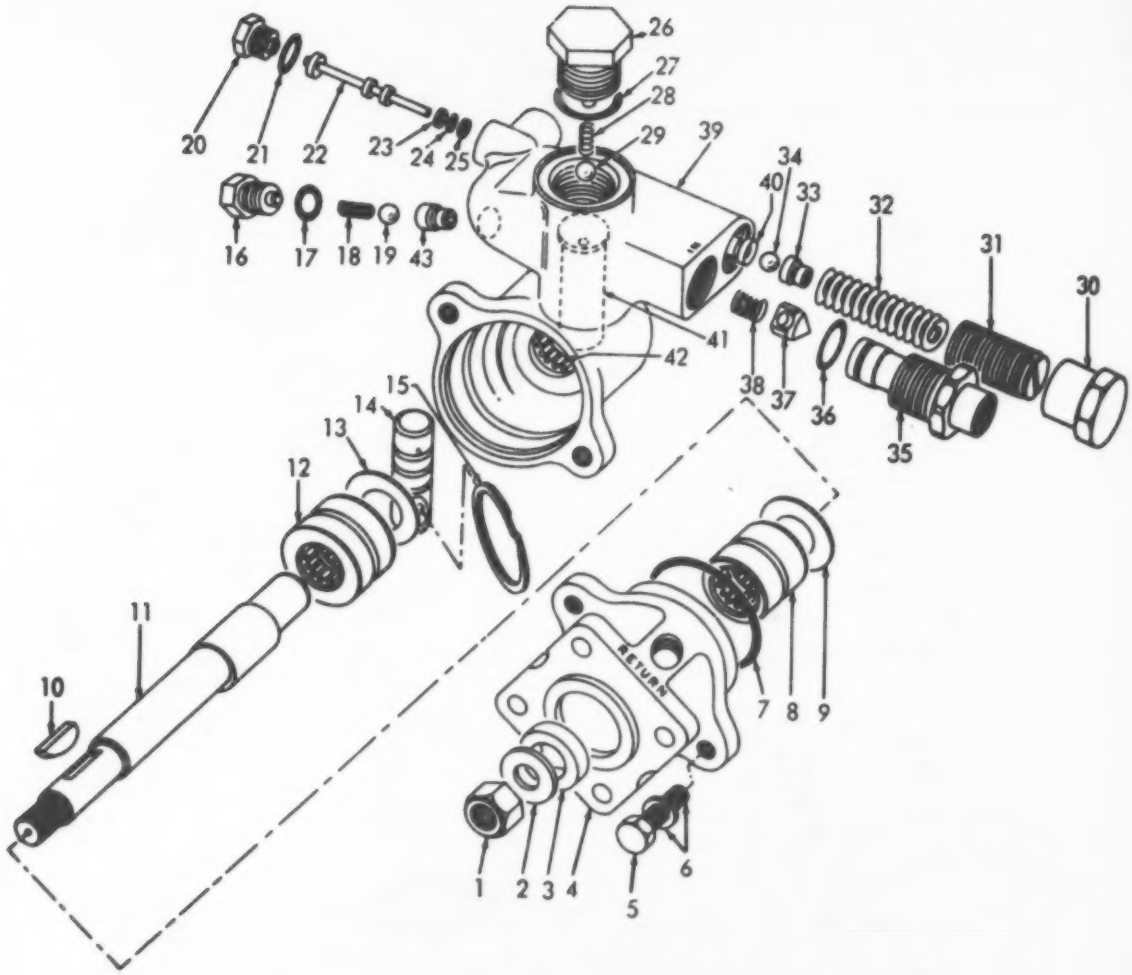

Figure 56. Pump Hydraulic Starter (Sheet 1 of 2)

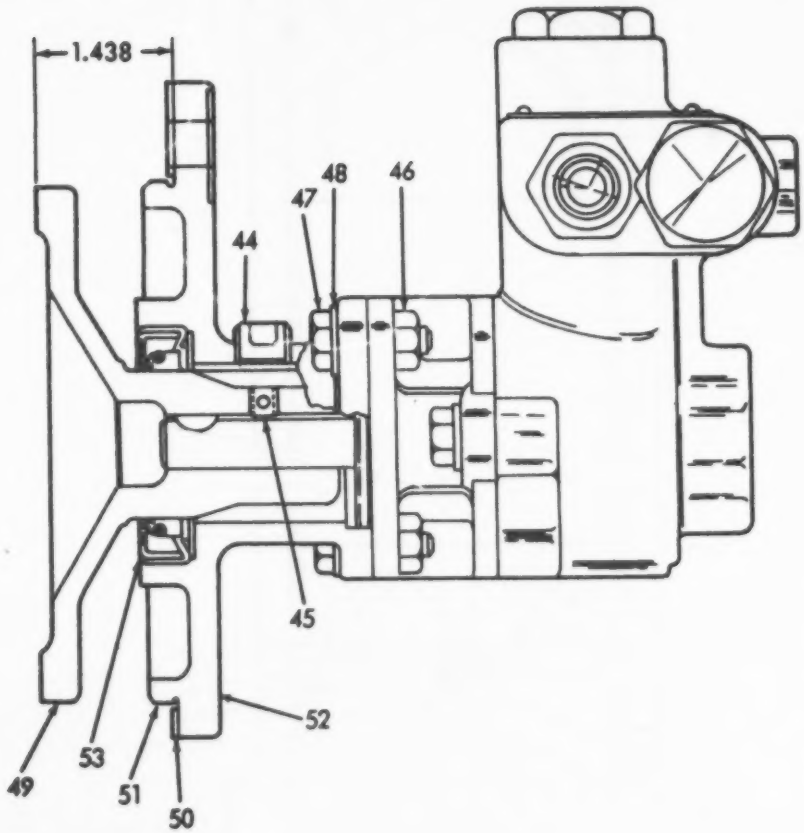

Figure 56. Pump Hydraulic Starter (Sheet 2 of 2)

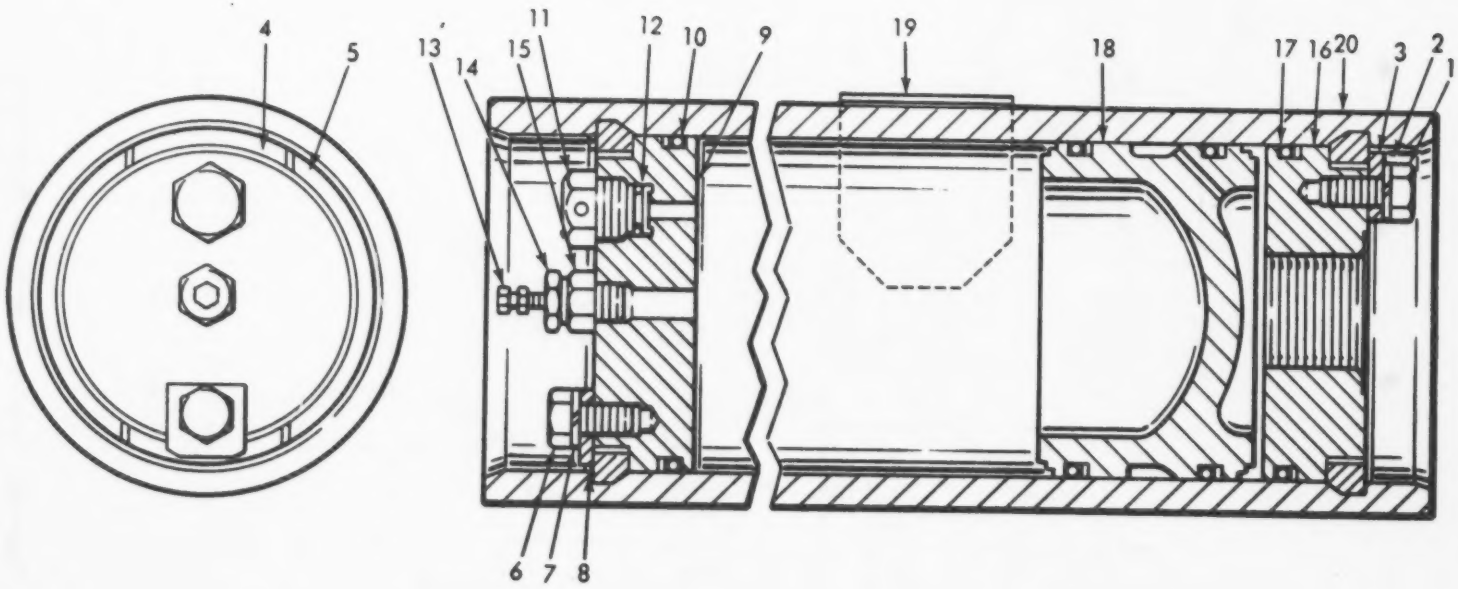

Figure 57. Accumulator, Hydraulic Starting

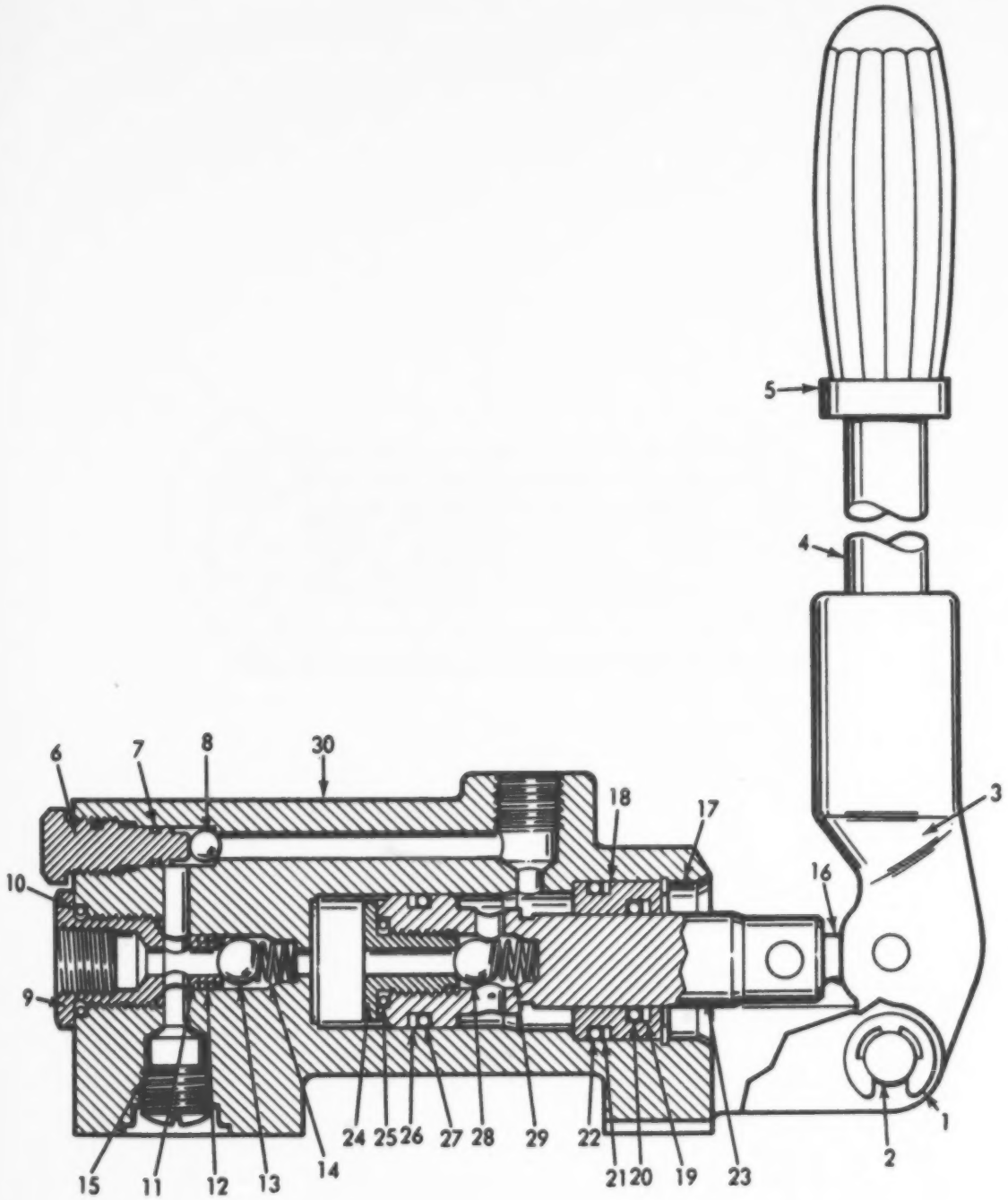

Figure 58. Pump, Hand, Hydraulic Starting

ME 1905-217-34P/58

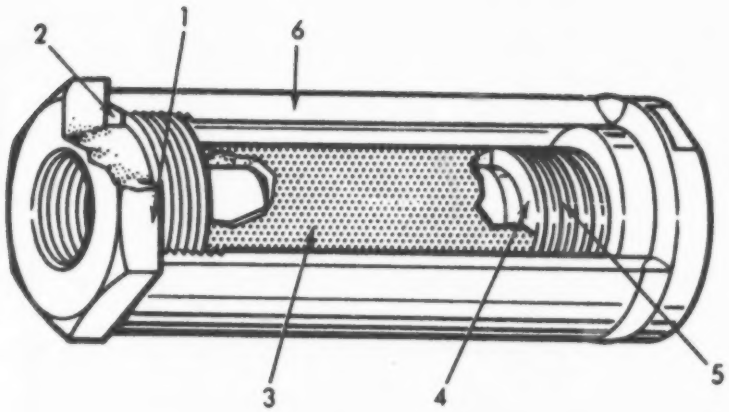

Figure 59. Filter, Oil, Hydraulic Starting

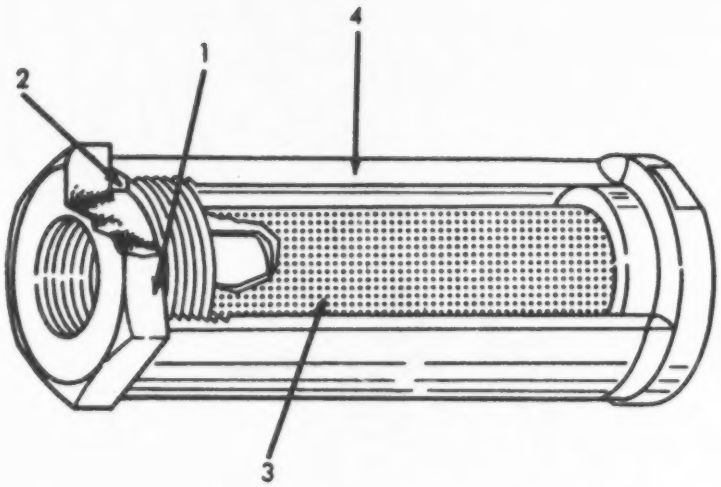

Figure 60. Filter, Oil, Hydraulic Starting

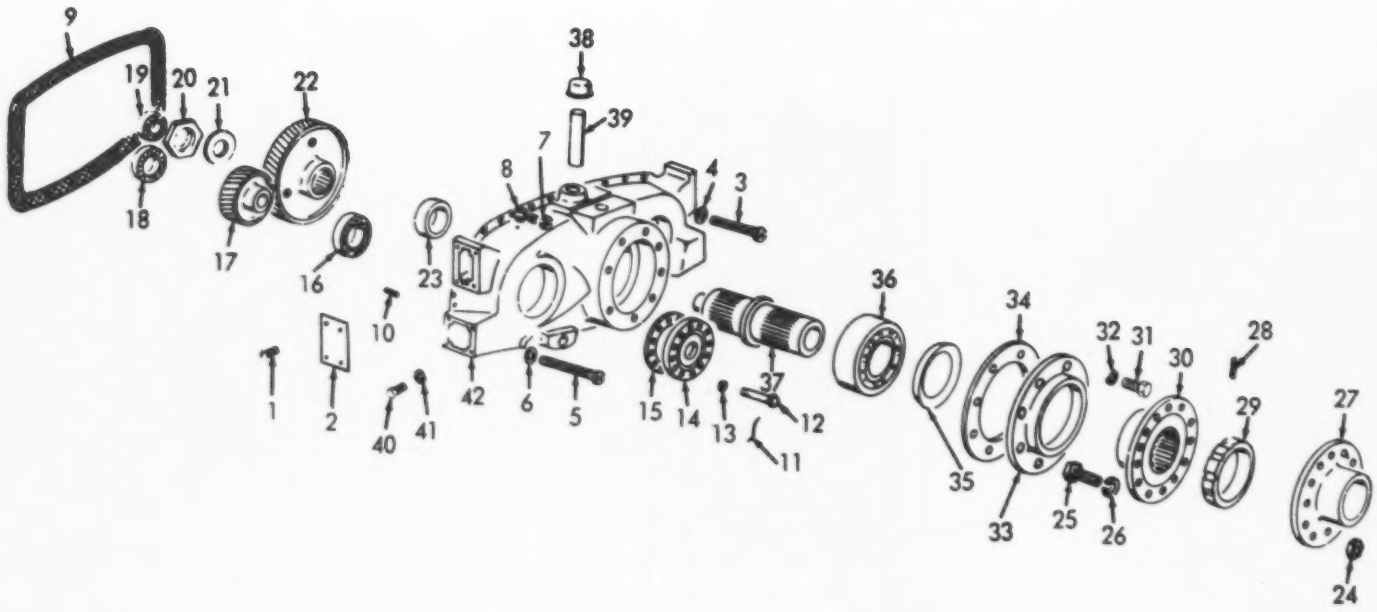

Figure 61. Transfer Gear

ME 1905-217-34P/61

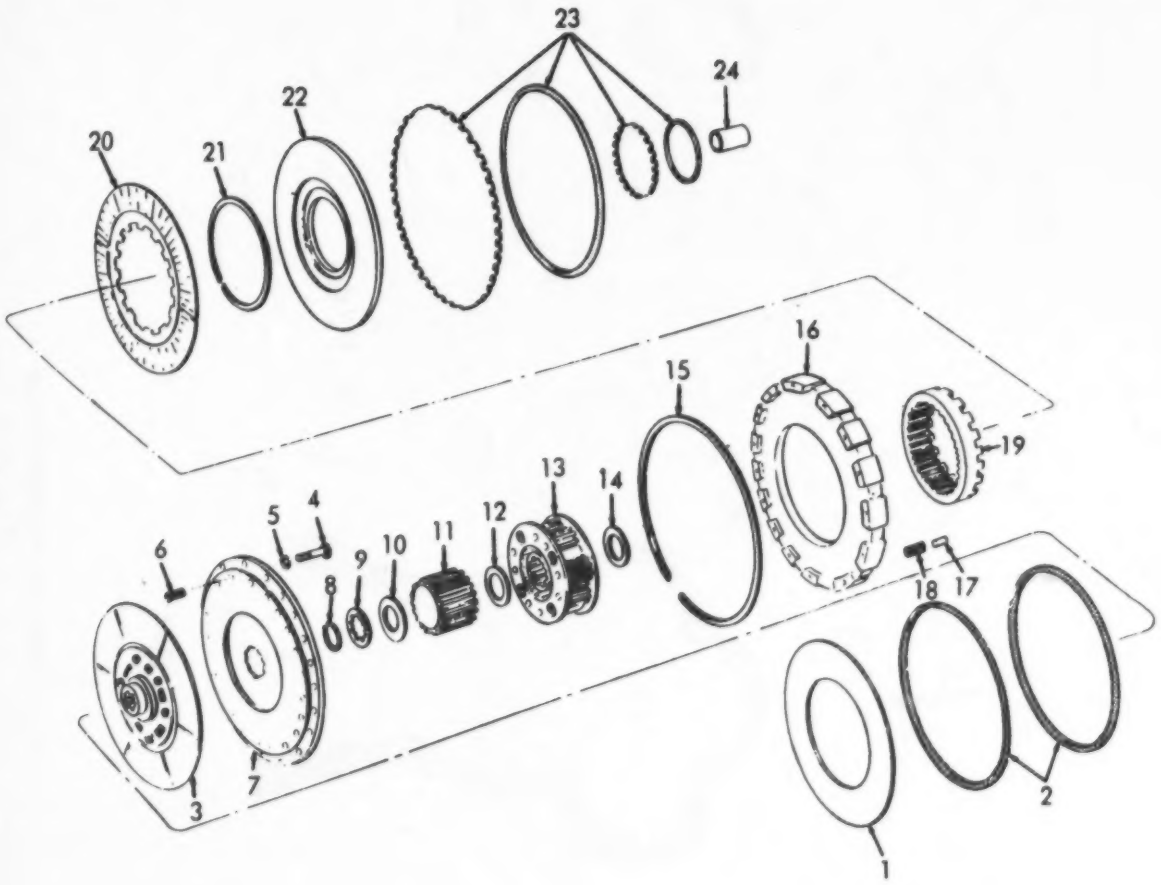

Figure 62. Gear, Reverse

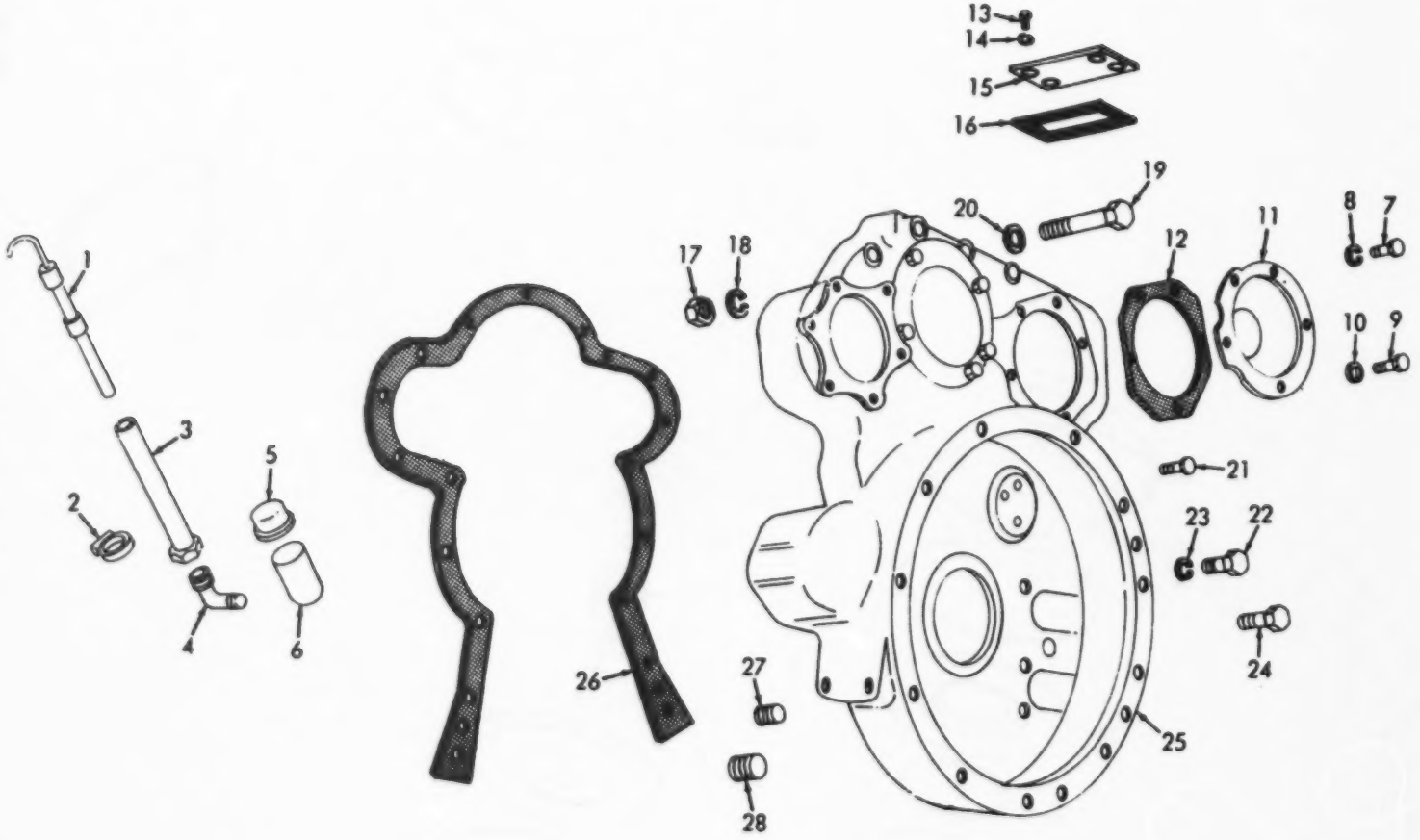

Figure 63. Flywheel Housing

ME 1905-217-34P/63

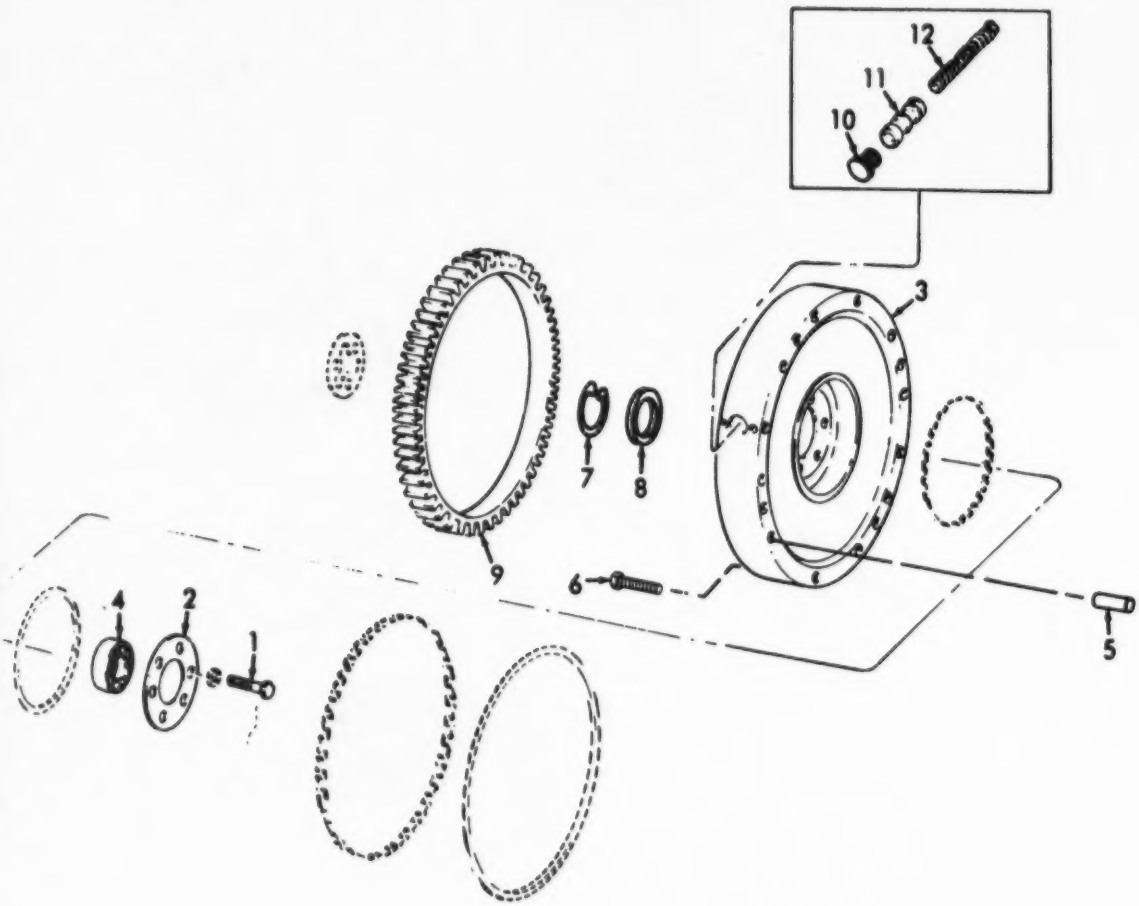

Figure 64. Flywheel

ME 1905-217-34P/64

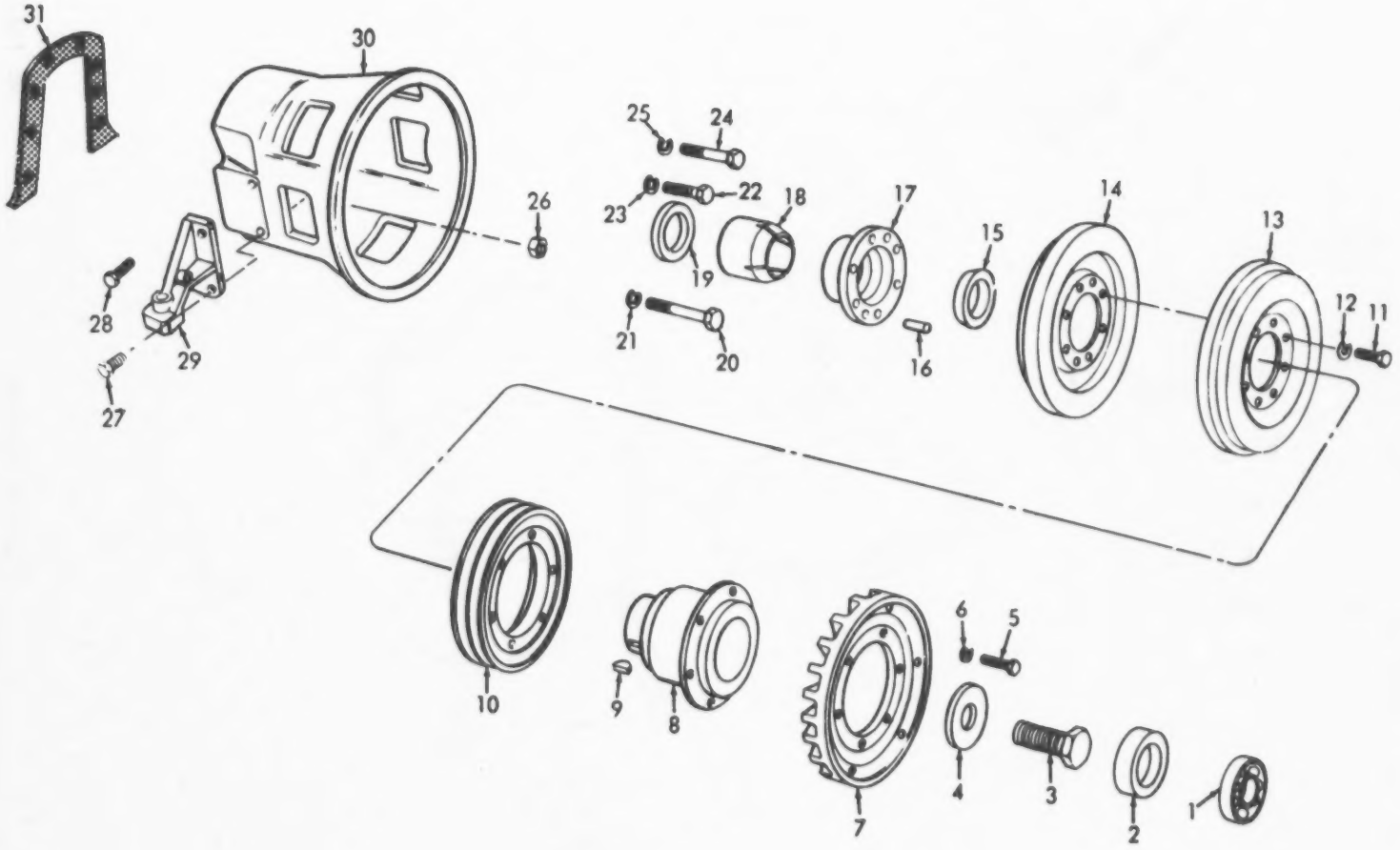

Figure 65. Power Take-Off Coupling and Vibration Damper

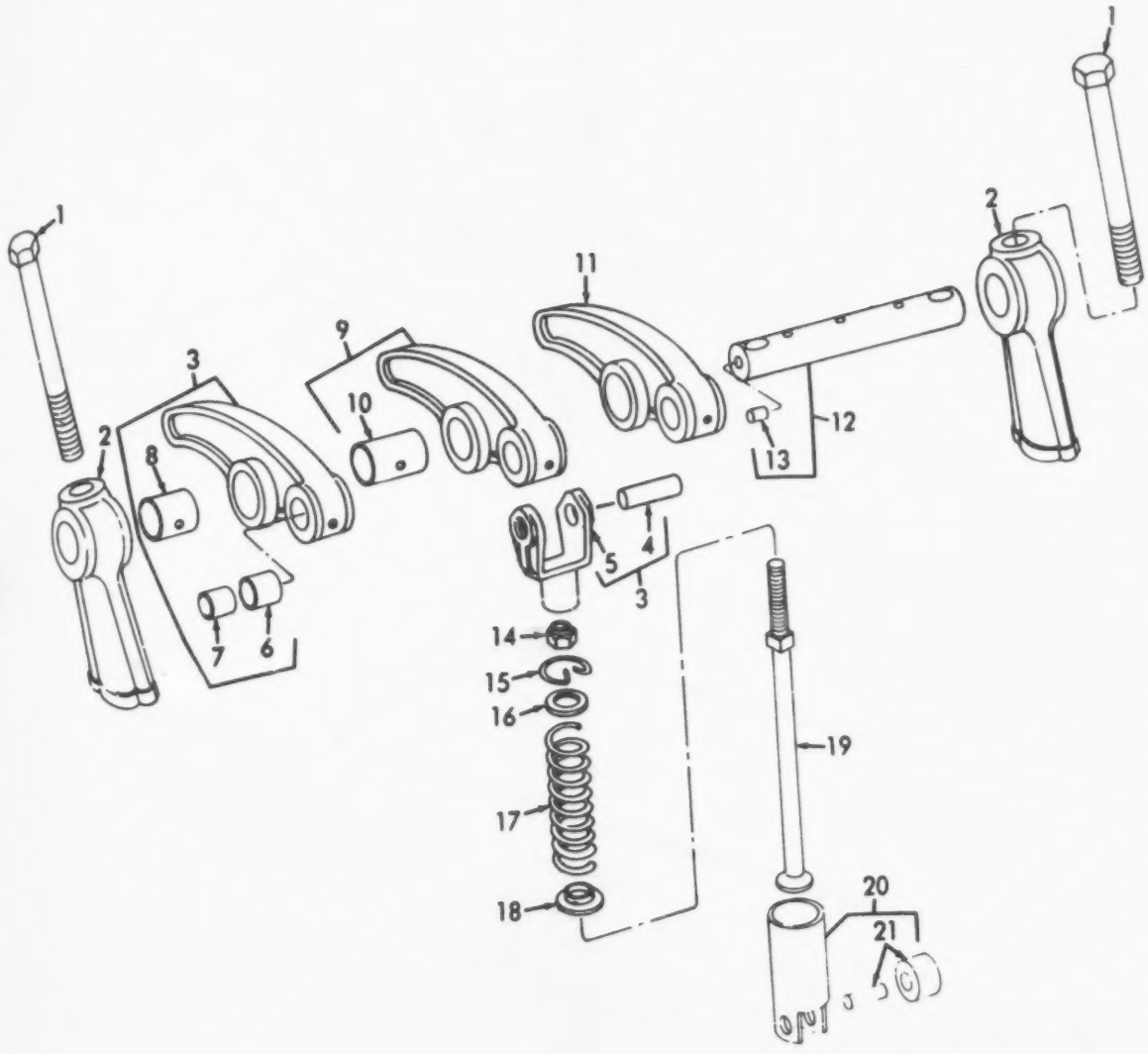

Figure 66. Rocker Arm

ME 1905-217-34P/66

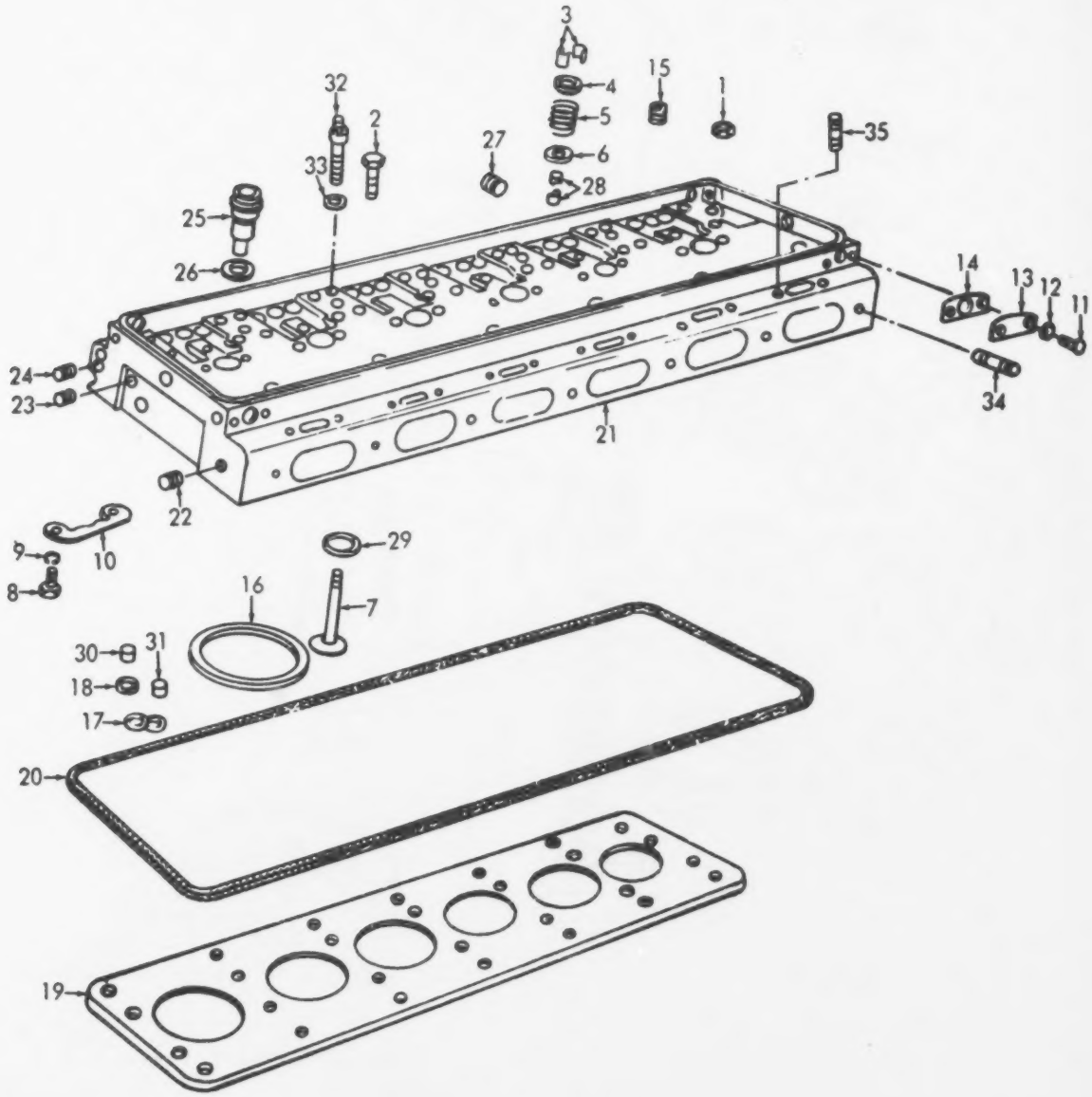

Figure 67. Cylinder Head

ME 1905-217-34P/67

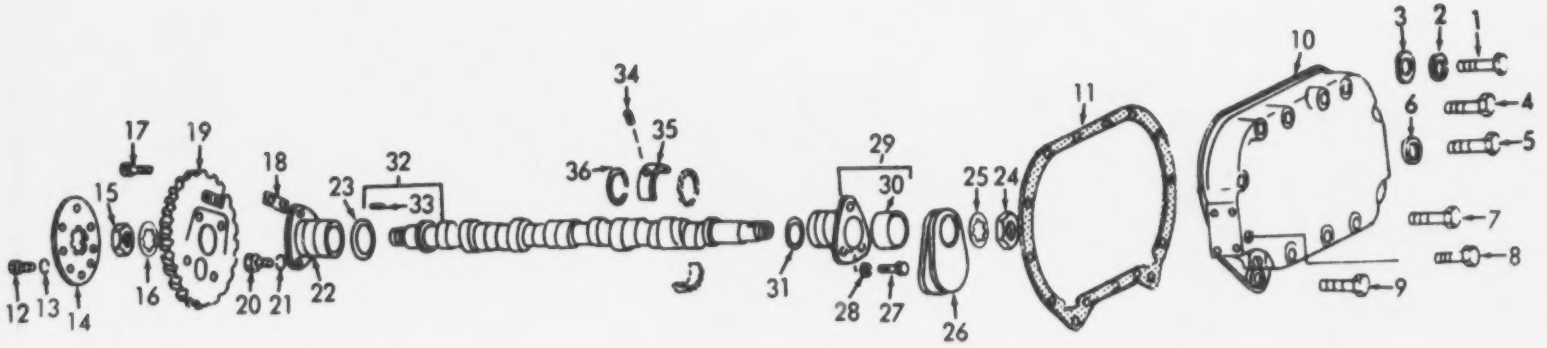

Figure 68. Cam and Balance Sheet Bearing, Gears and Weights

ME 1905-217-34P/68

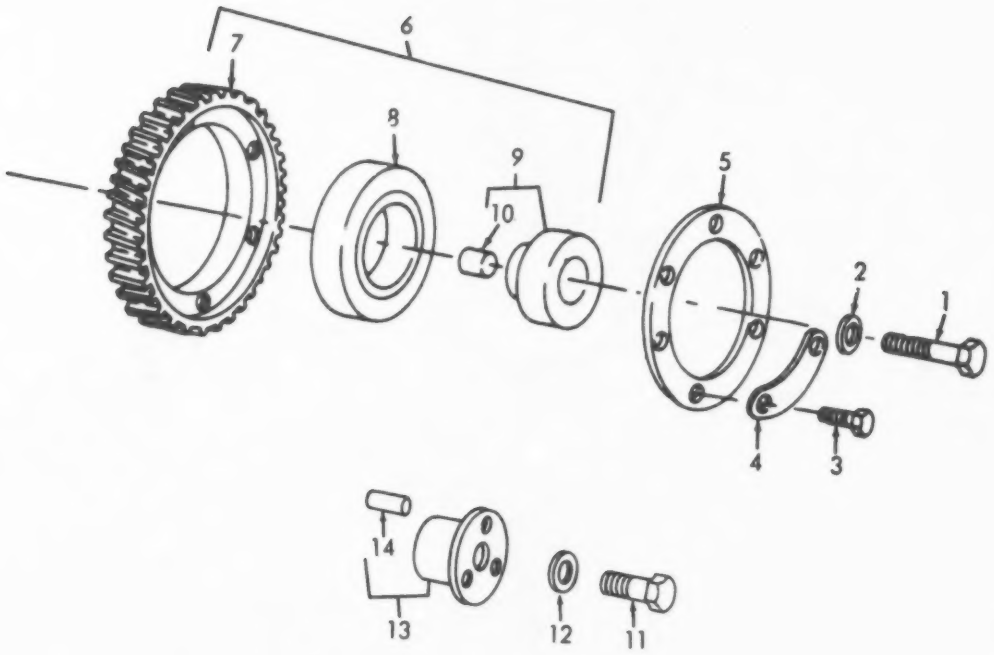

Figure 69. Idler Gears and Bearings

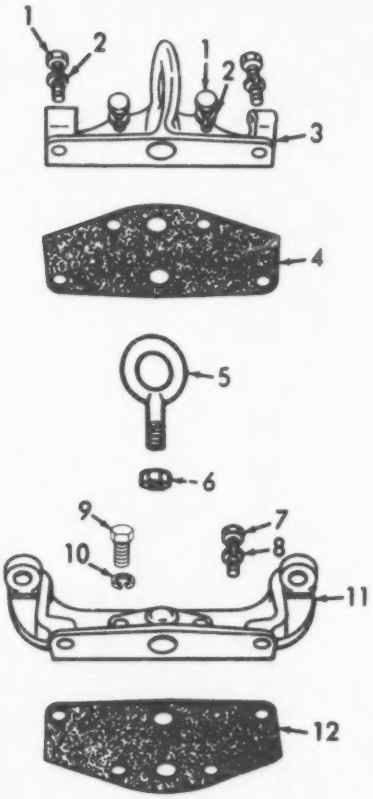

Figure 70. Engine Lifting Brackets

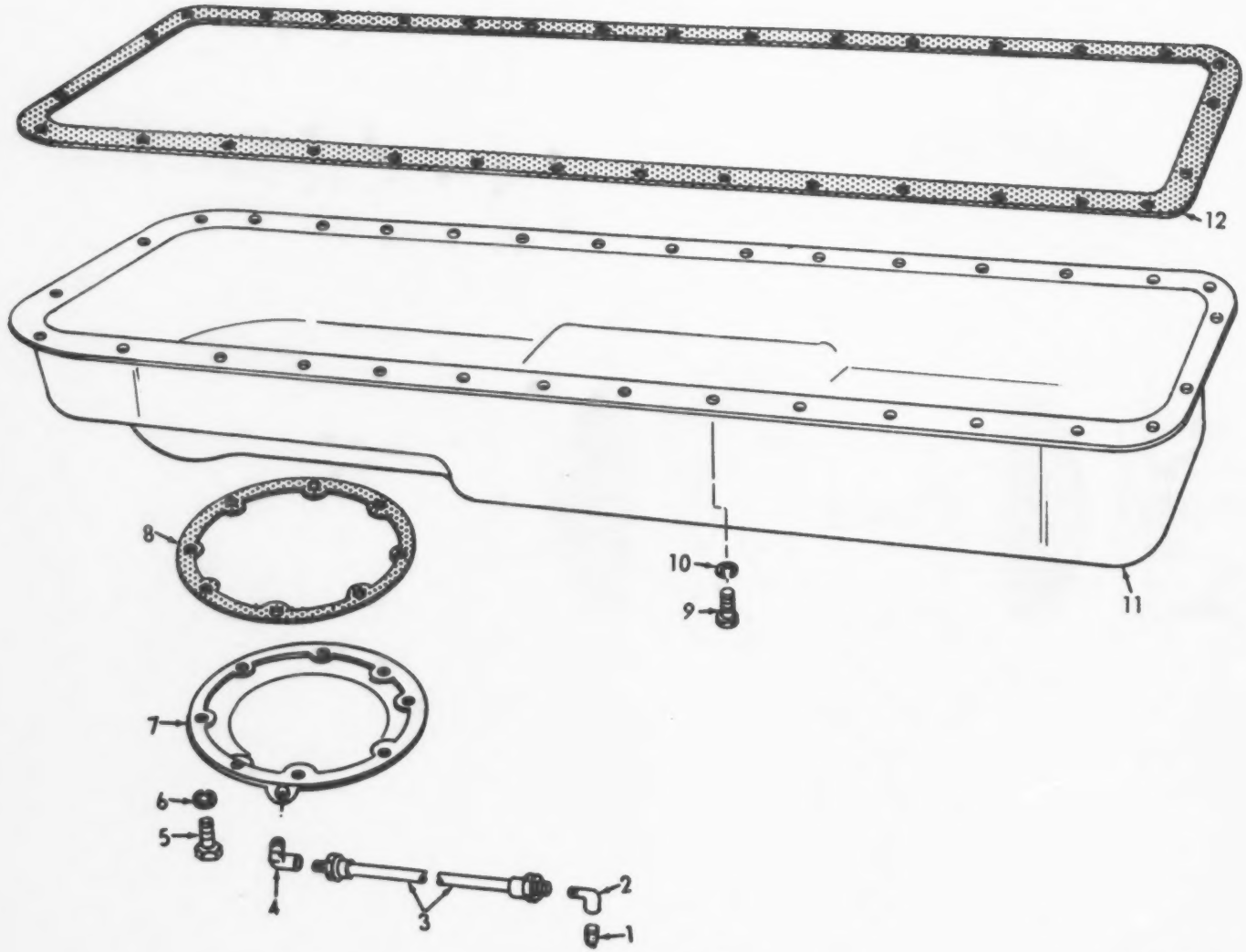

Figure 71. Oil Pan

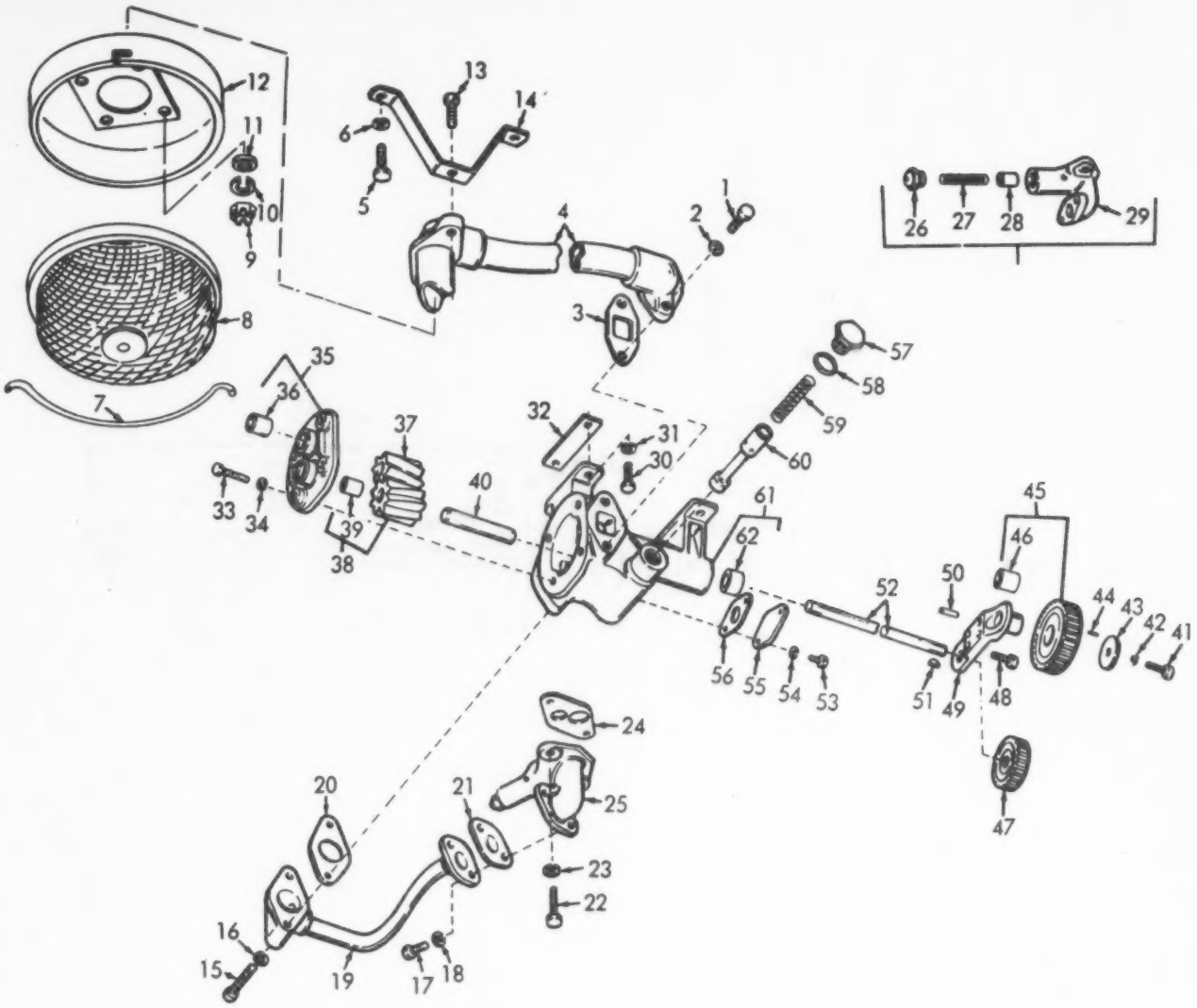

Figure 72. Oil Pump

ME 1905-217-34P/72

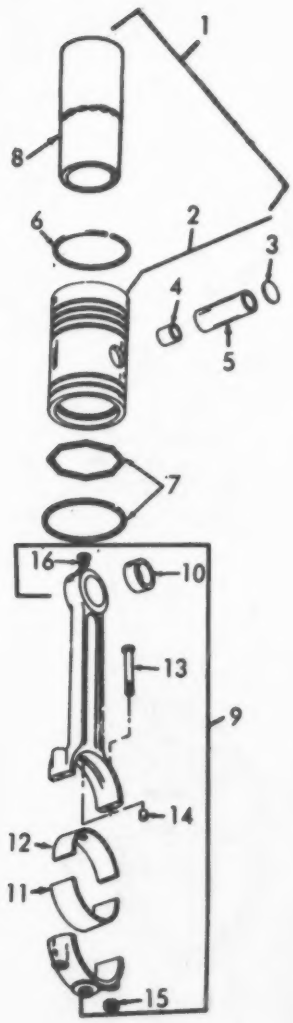

Figure 73. Piston and Connecting Rod

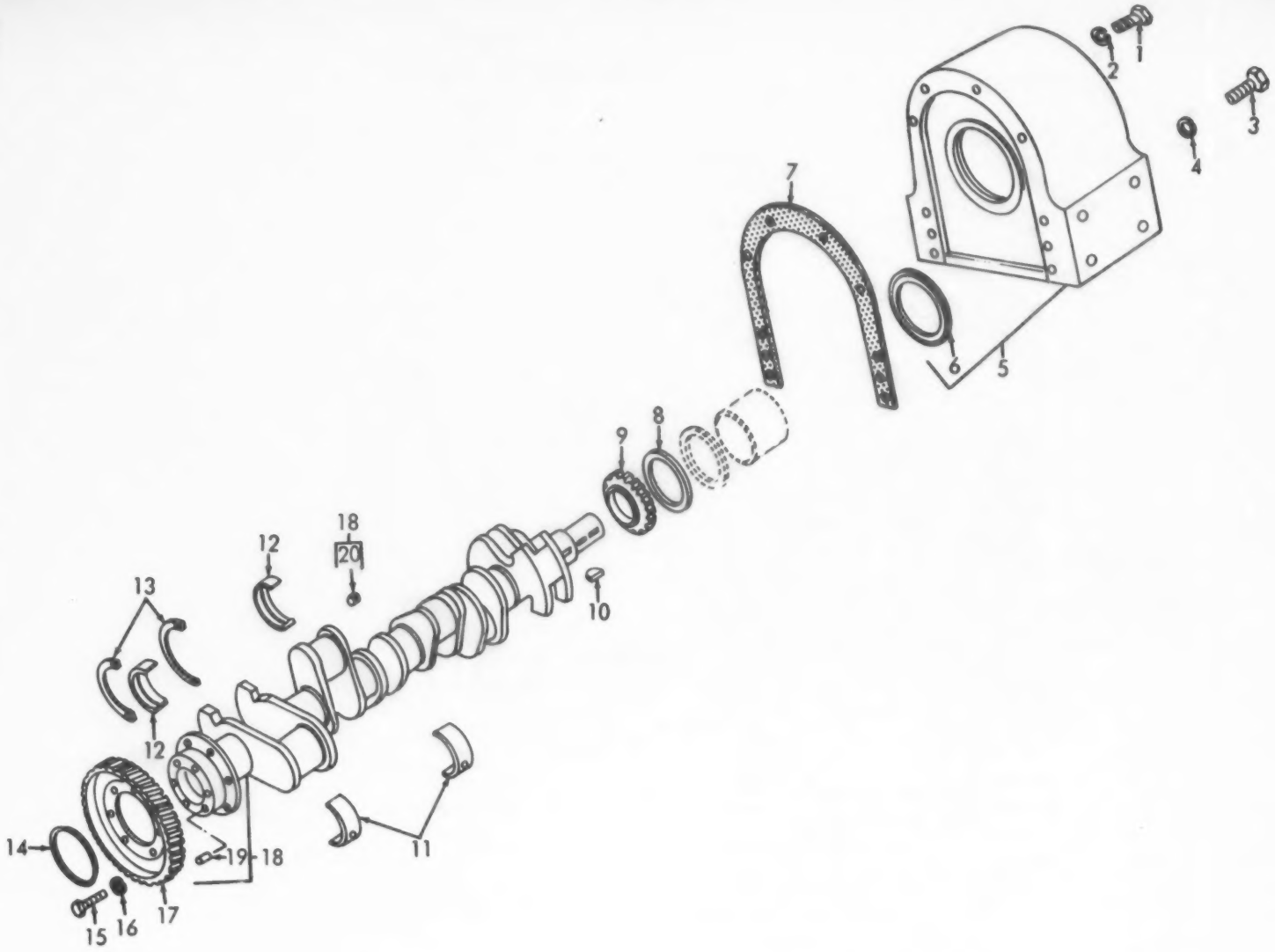

Figure 74. Crankshaft

ME 1905-217-34P/74

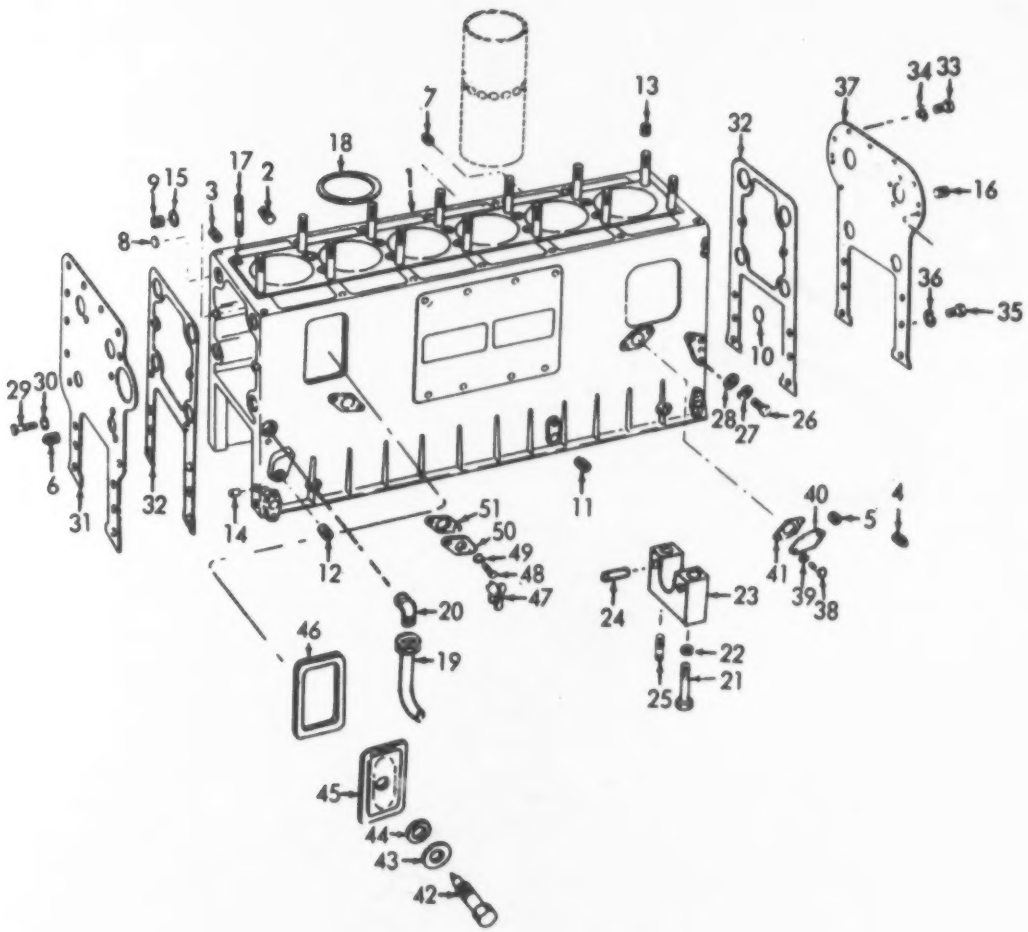

Figure 75. Cylinder Block

ME 1905-217-34P/75

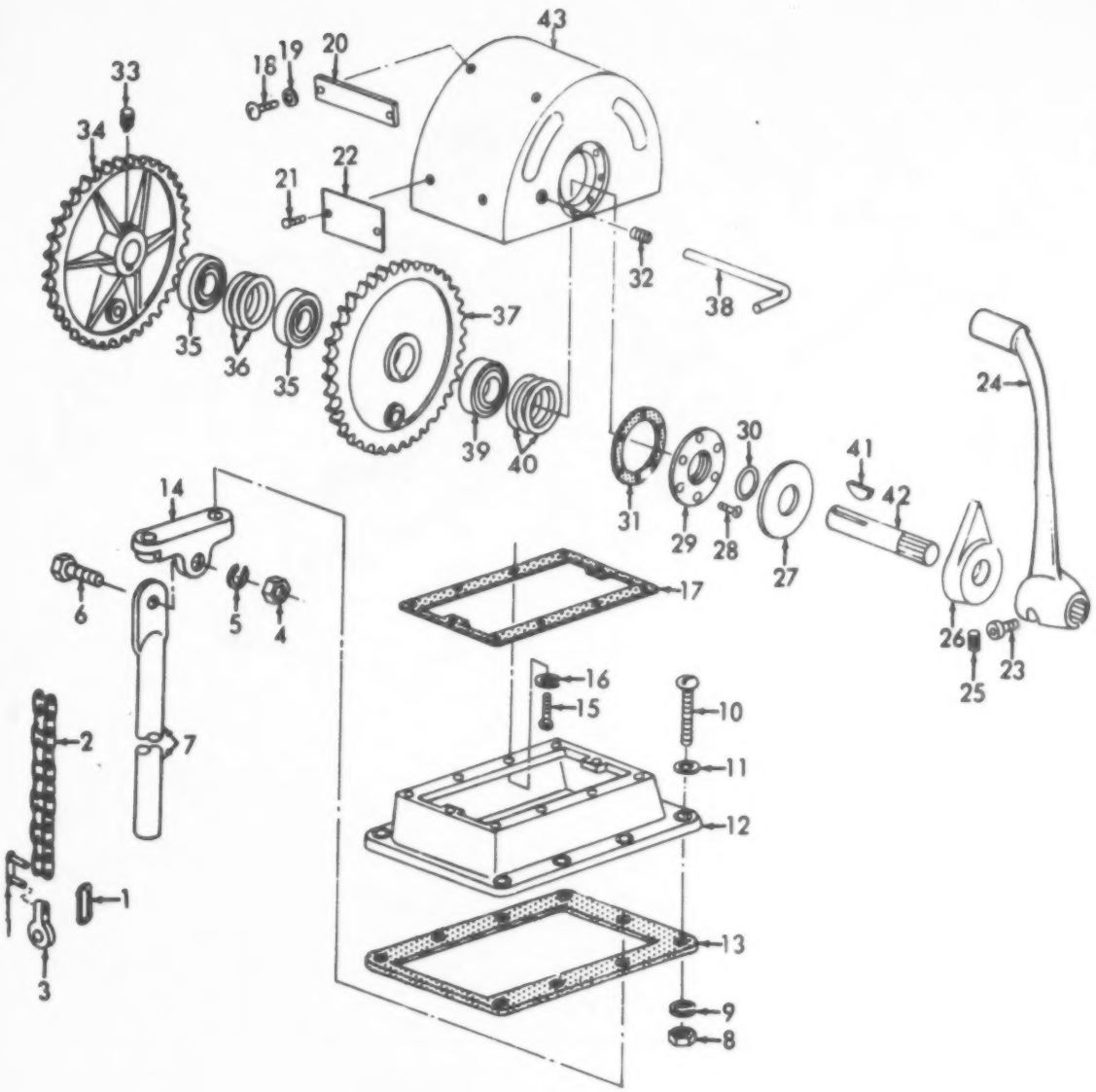

Figure 76. Pilot House Levers, Sprockets and Chain

ME 1905-217-34P/76

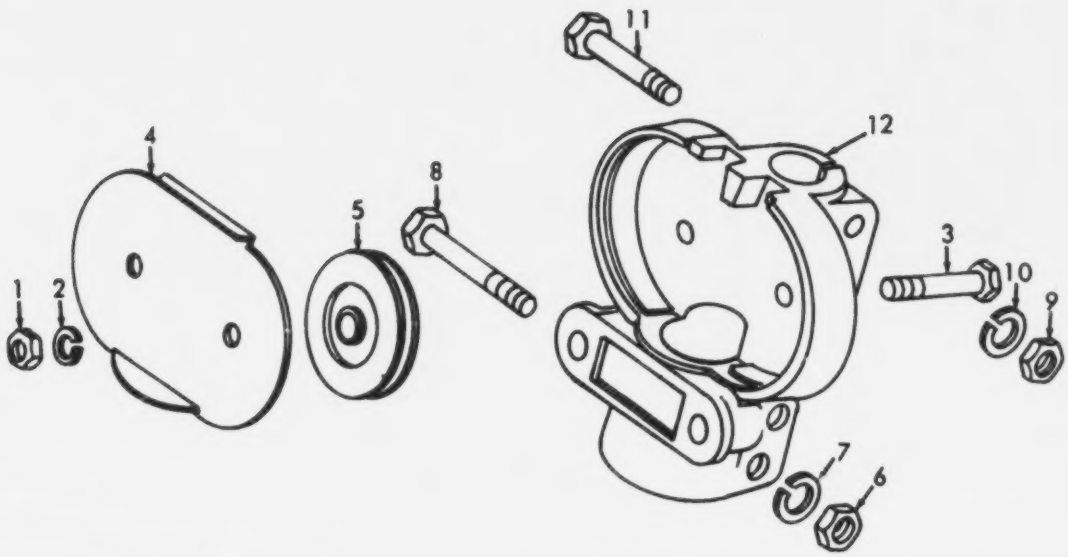

Figure 77. Pulley Terminal Block

ME 1905-217-34P/77

best copy available

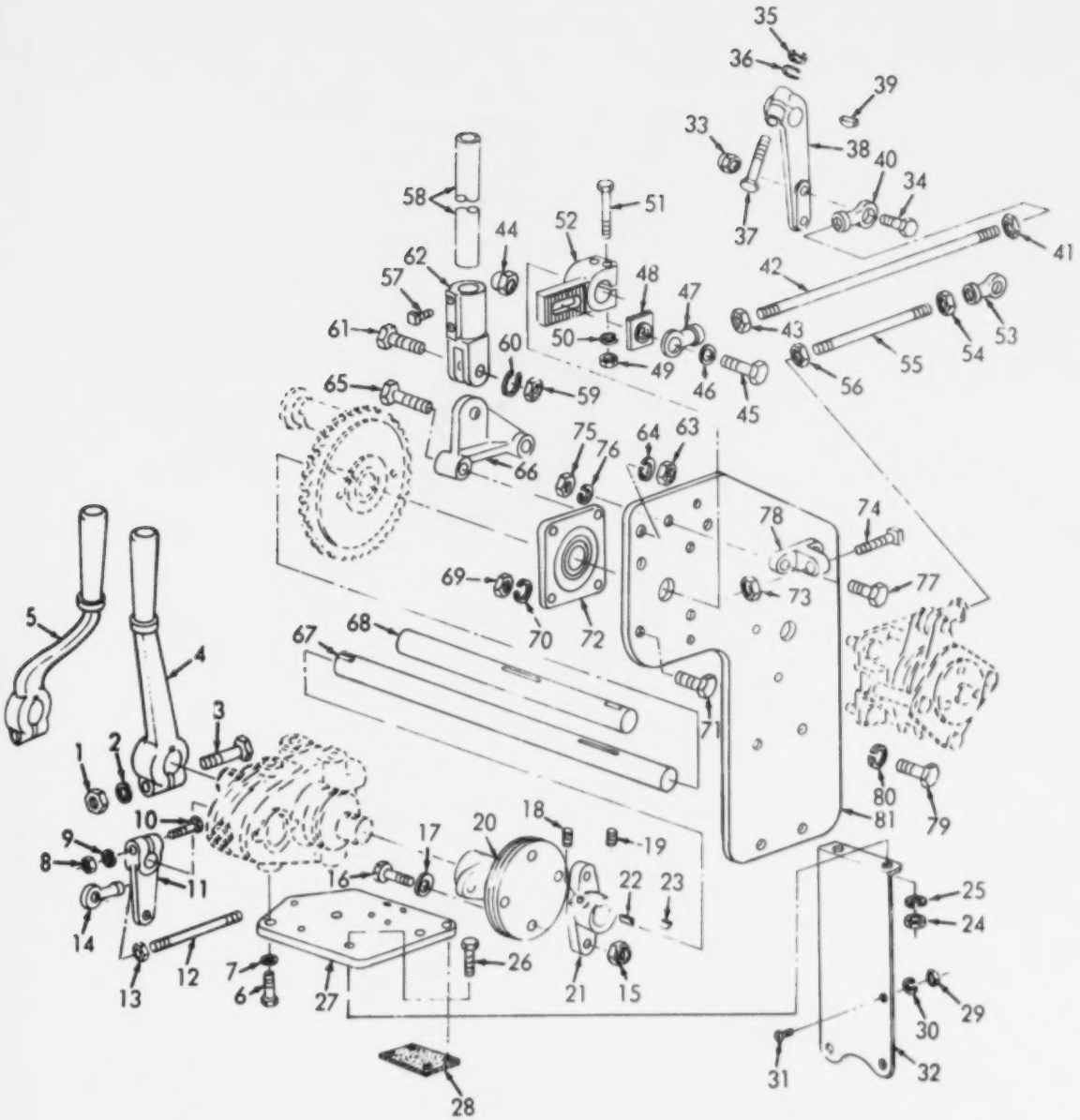

Figure 78. Engine Control Levers and Brackets

ME 1905-217-34P/78

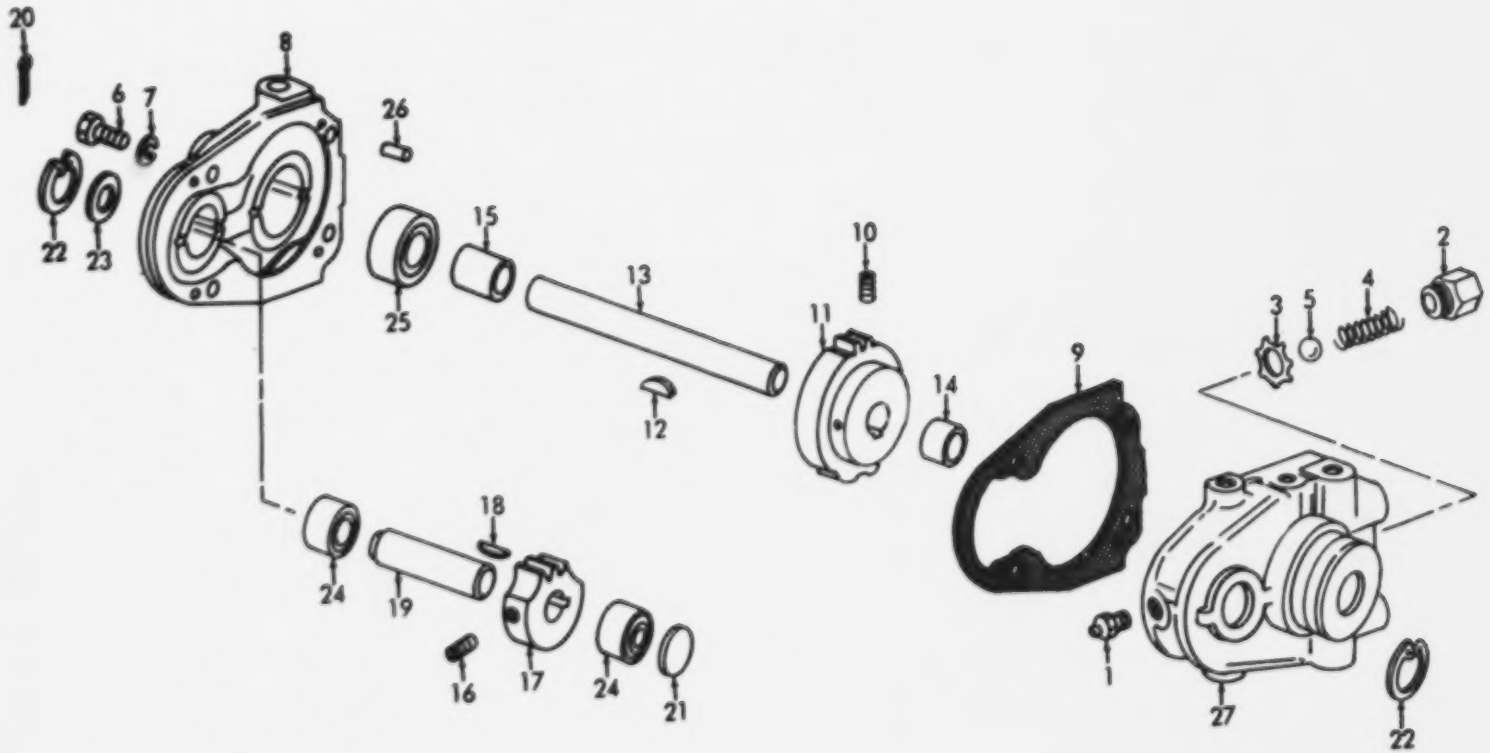

Figure 79. Engine Control Unit

ME 1905-217-34P/79

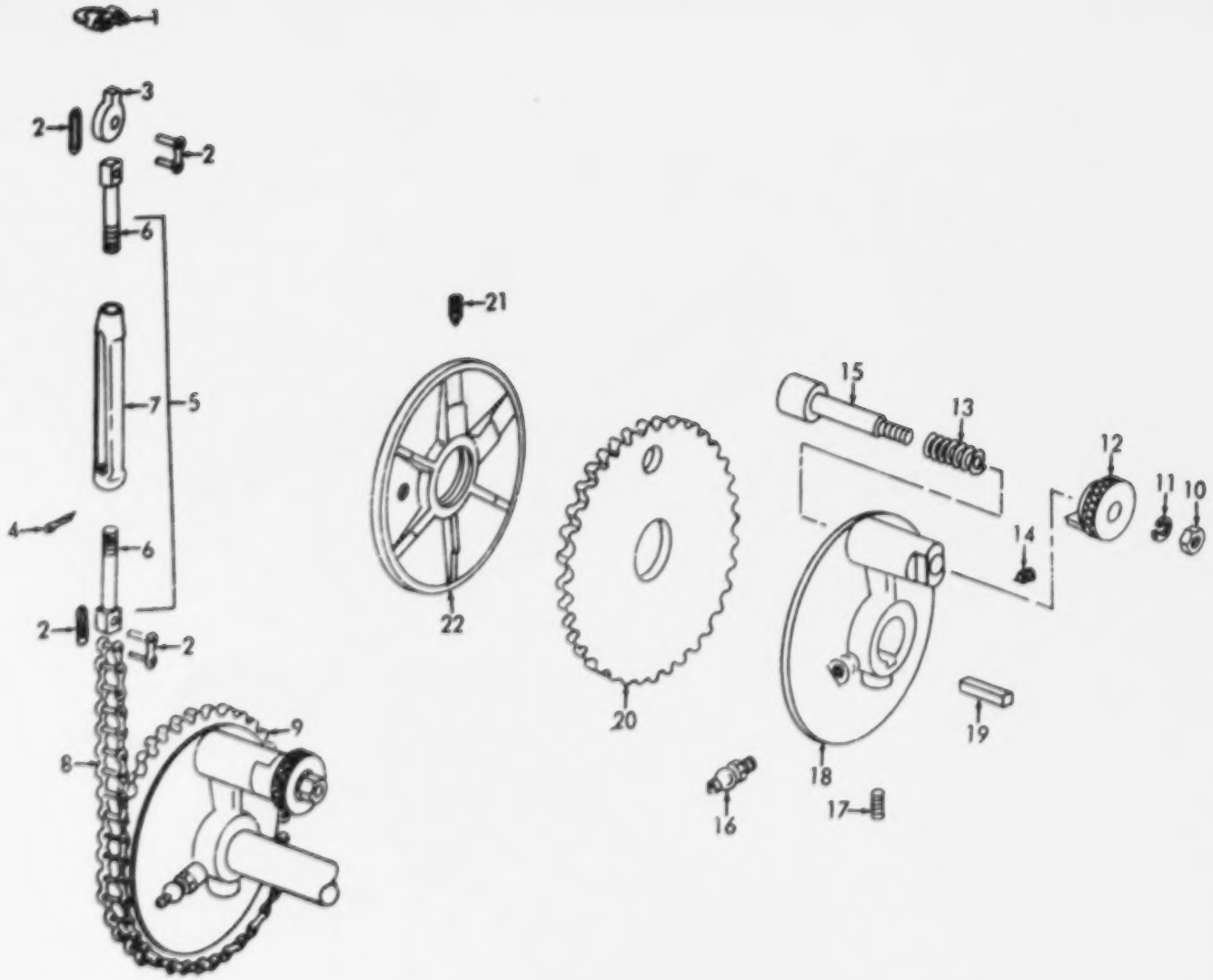

Figure 80. Pilot House Engine Controls

ME 1905-217-34P/80

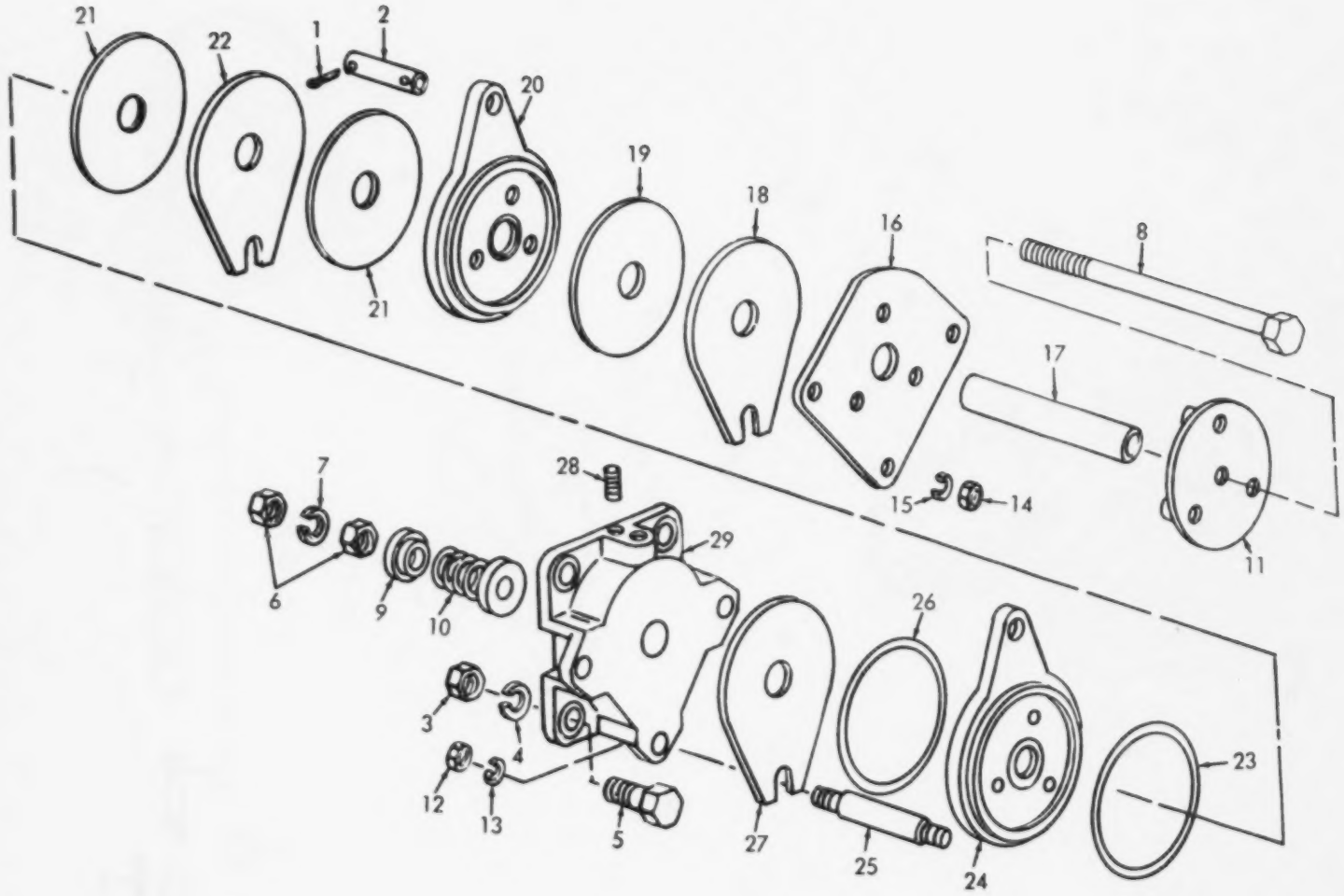

Figure 81. Brake, Free Wheeling

ME 1905-217-34P/81

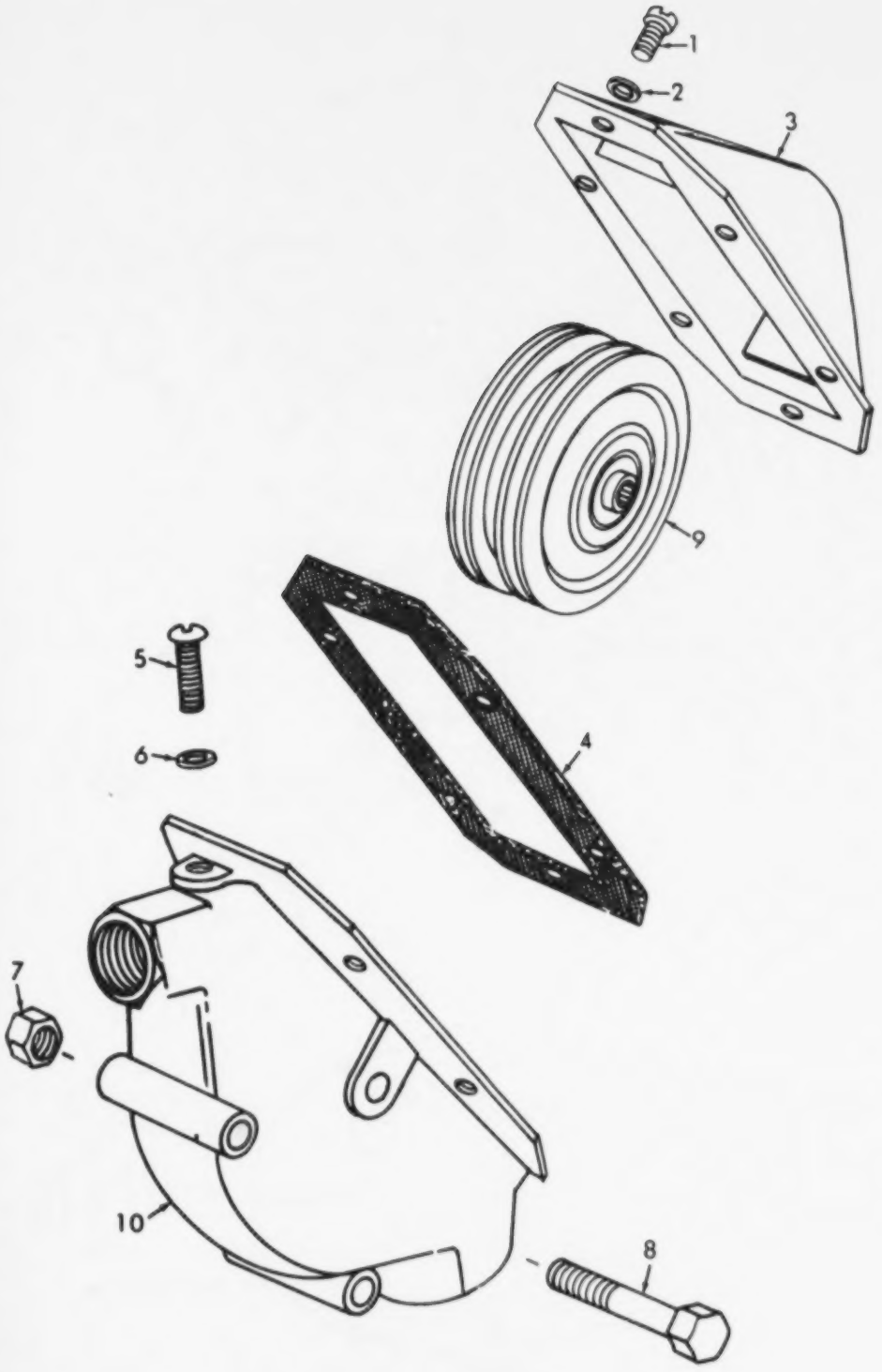

Figure 82. Marine Control Elbow

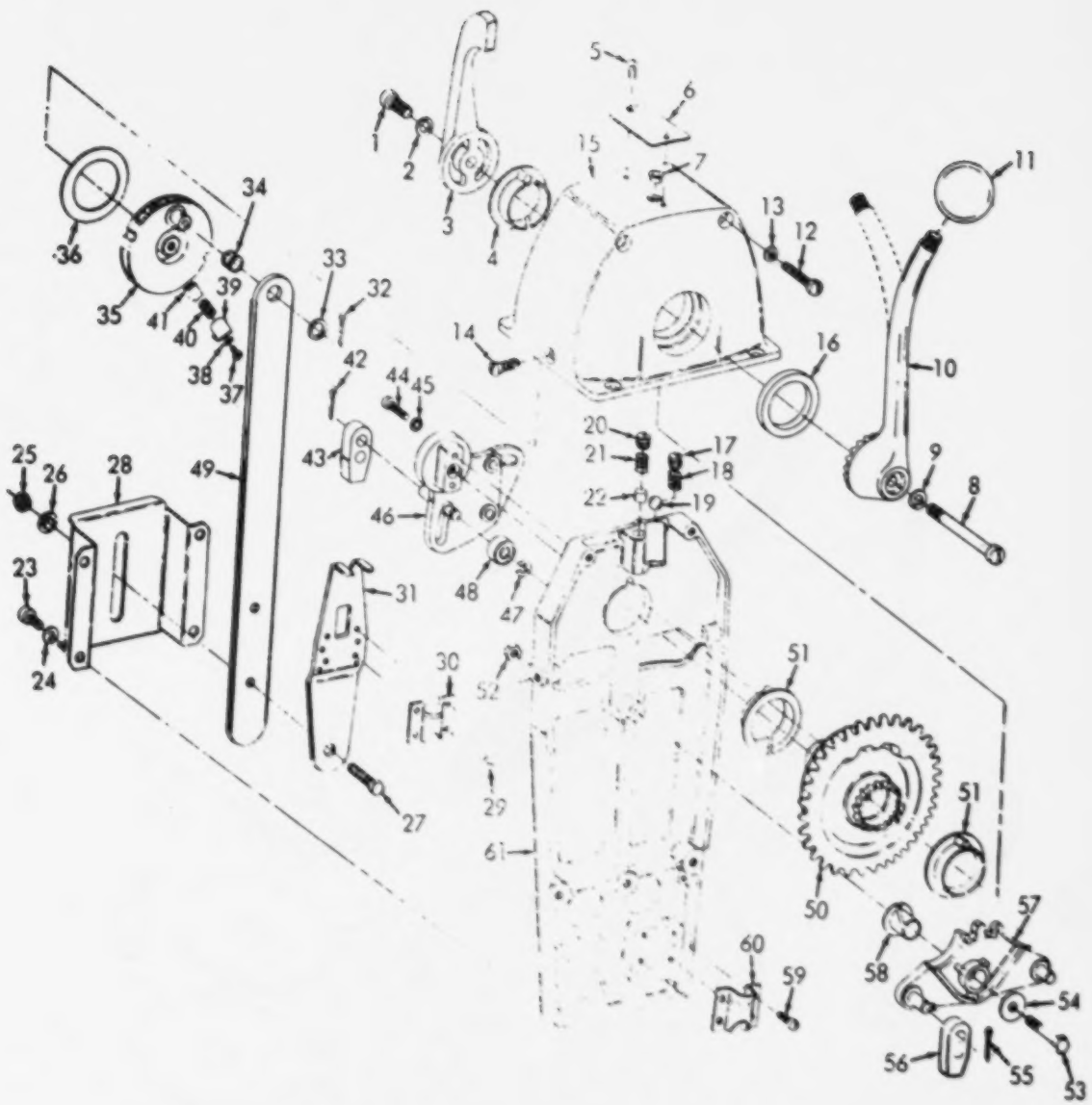

ME 1905-217-34P/83

Figure 82. Pilot House Controls

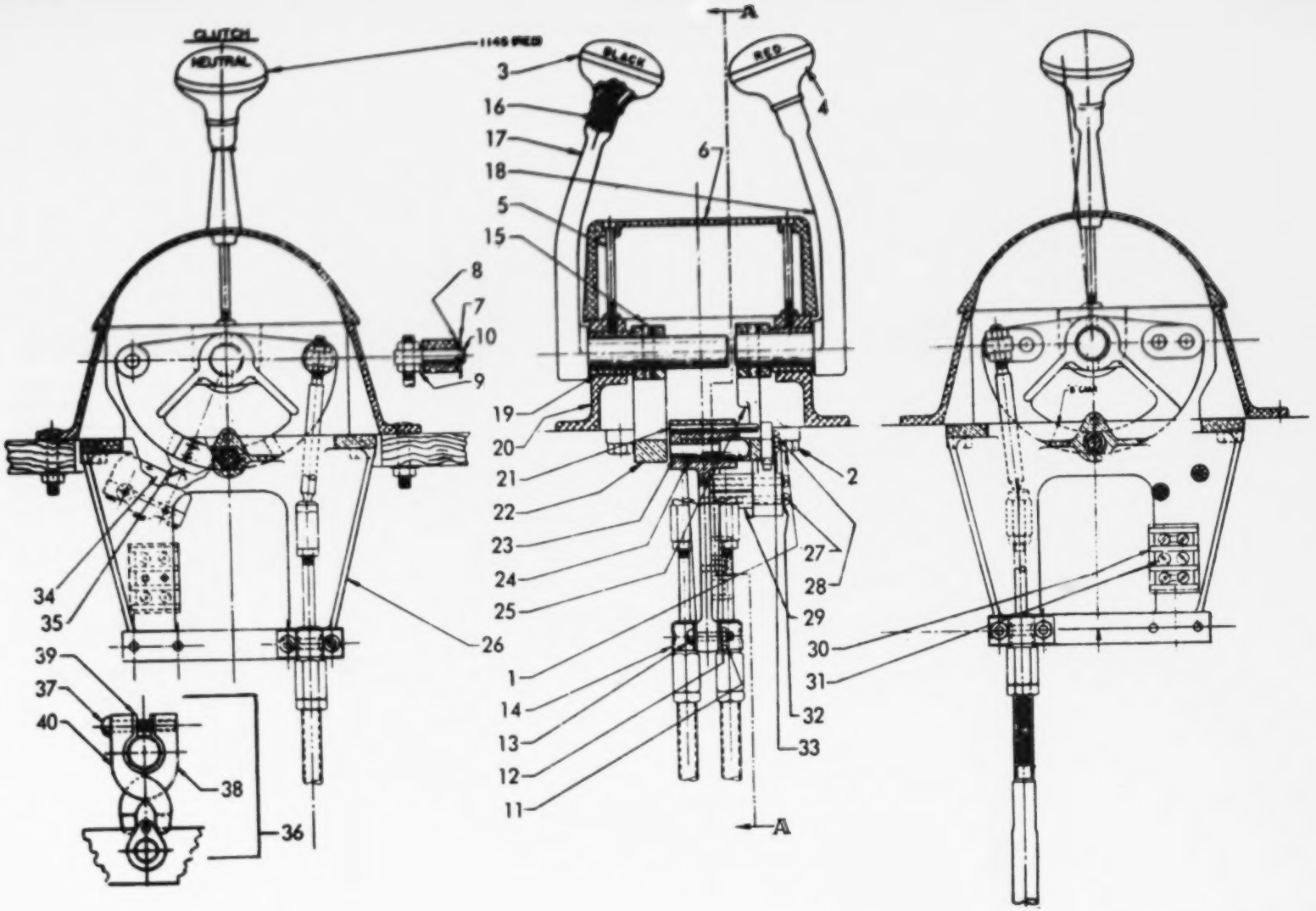

Figure 84. Pilot House Engine Controls

ME 1905-217-34P/84

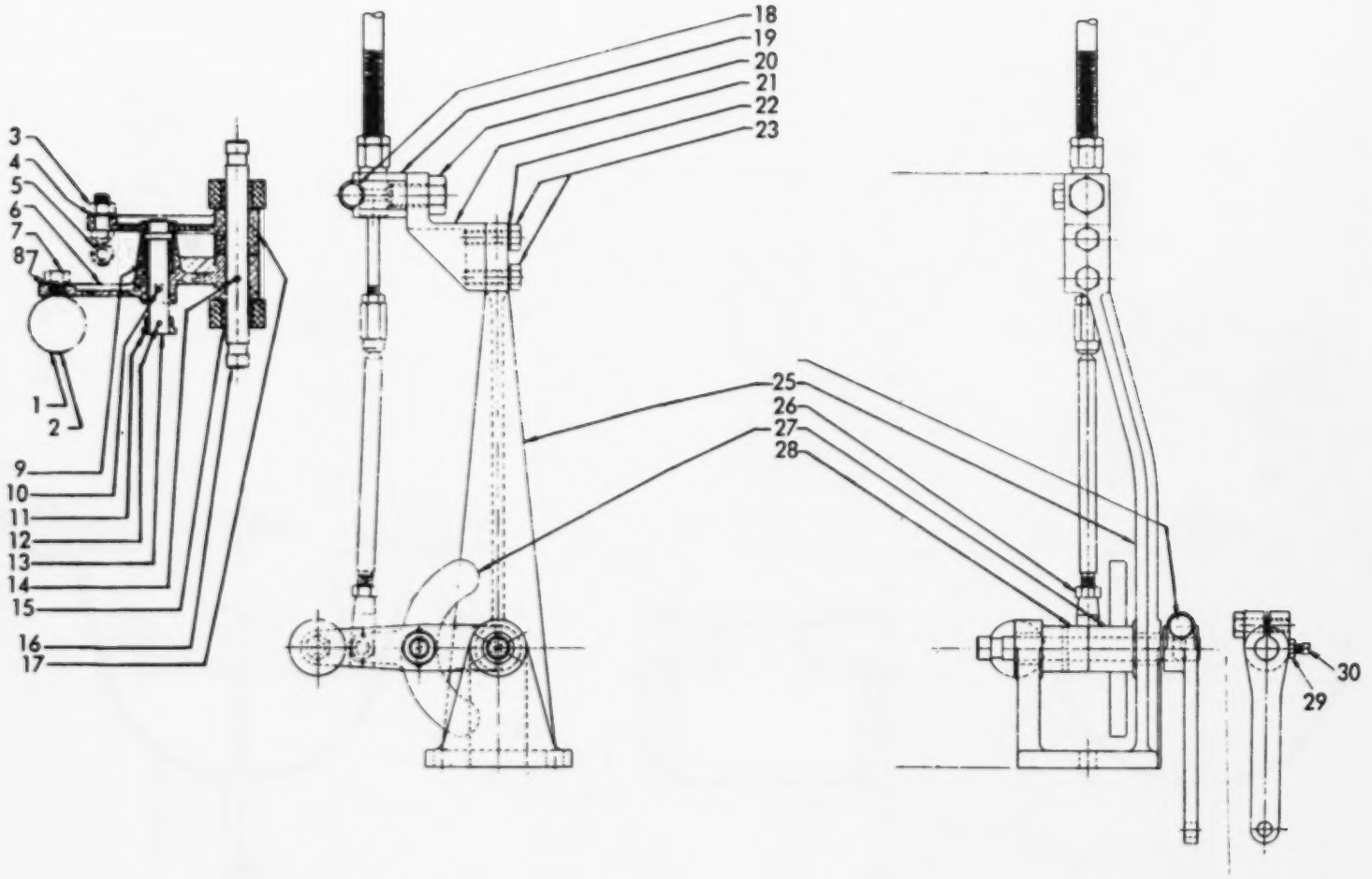

Figure 85. Control Unit, Engine Throttle

ME 1905-217-34P/85

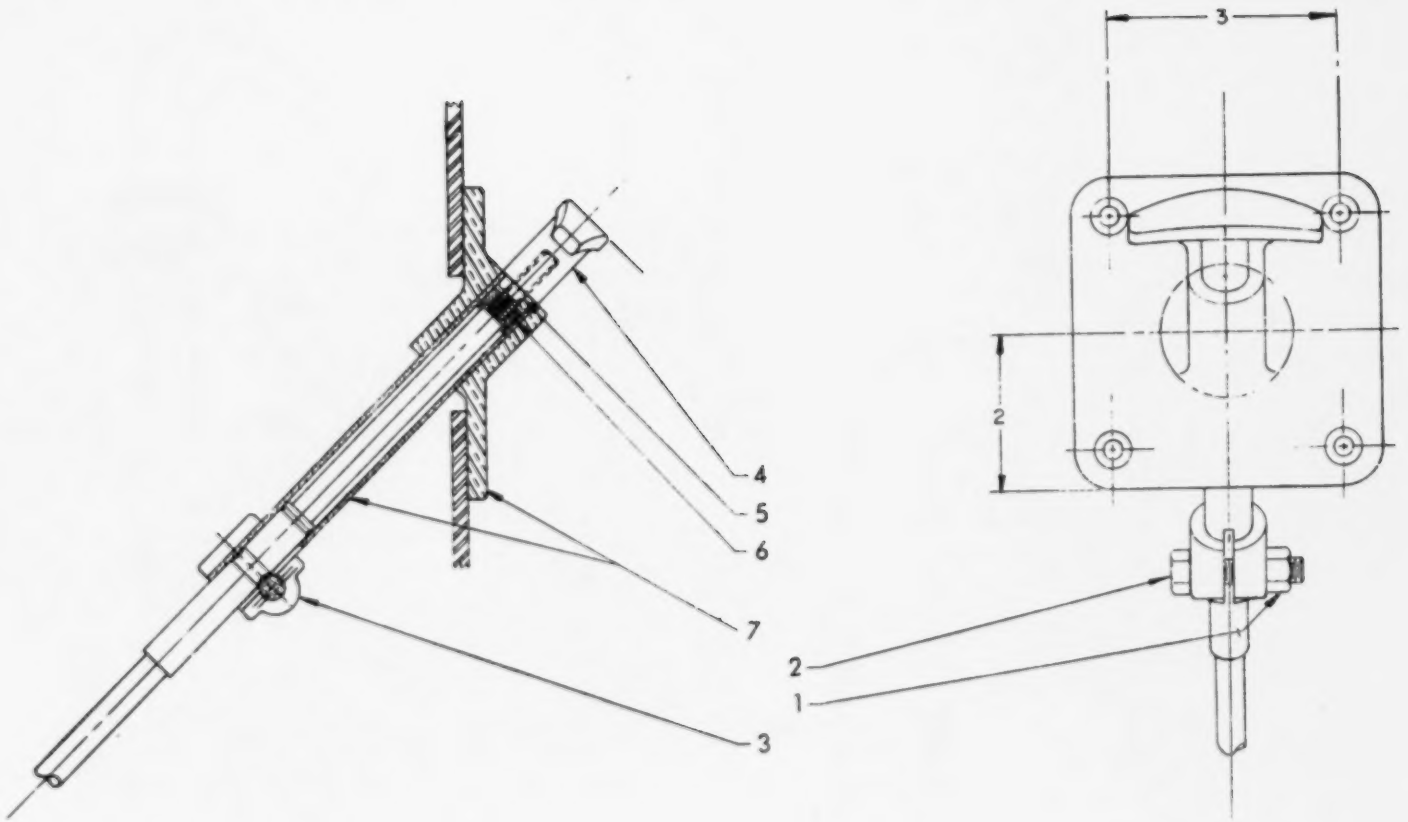

Figure 86. Fuel and Air Shutdown Control

ME 1905-217-34P/86

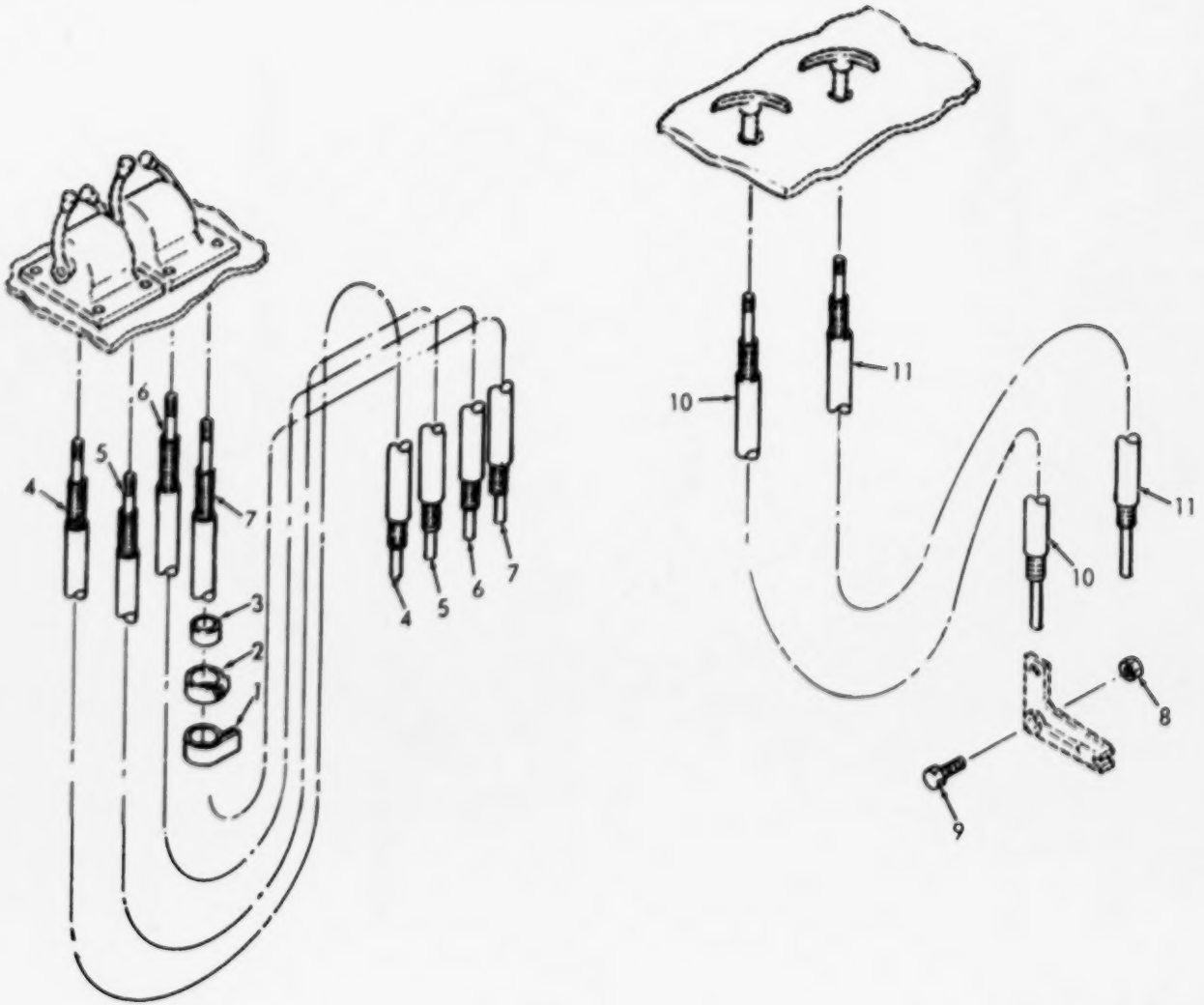

ME 1905-217-34P/87

Figure 87. Engine Controls

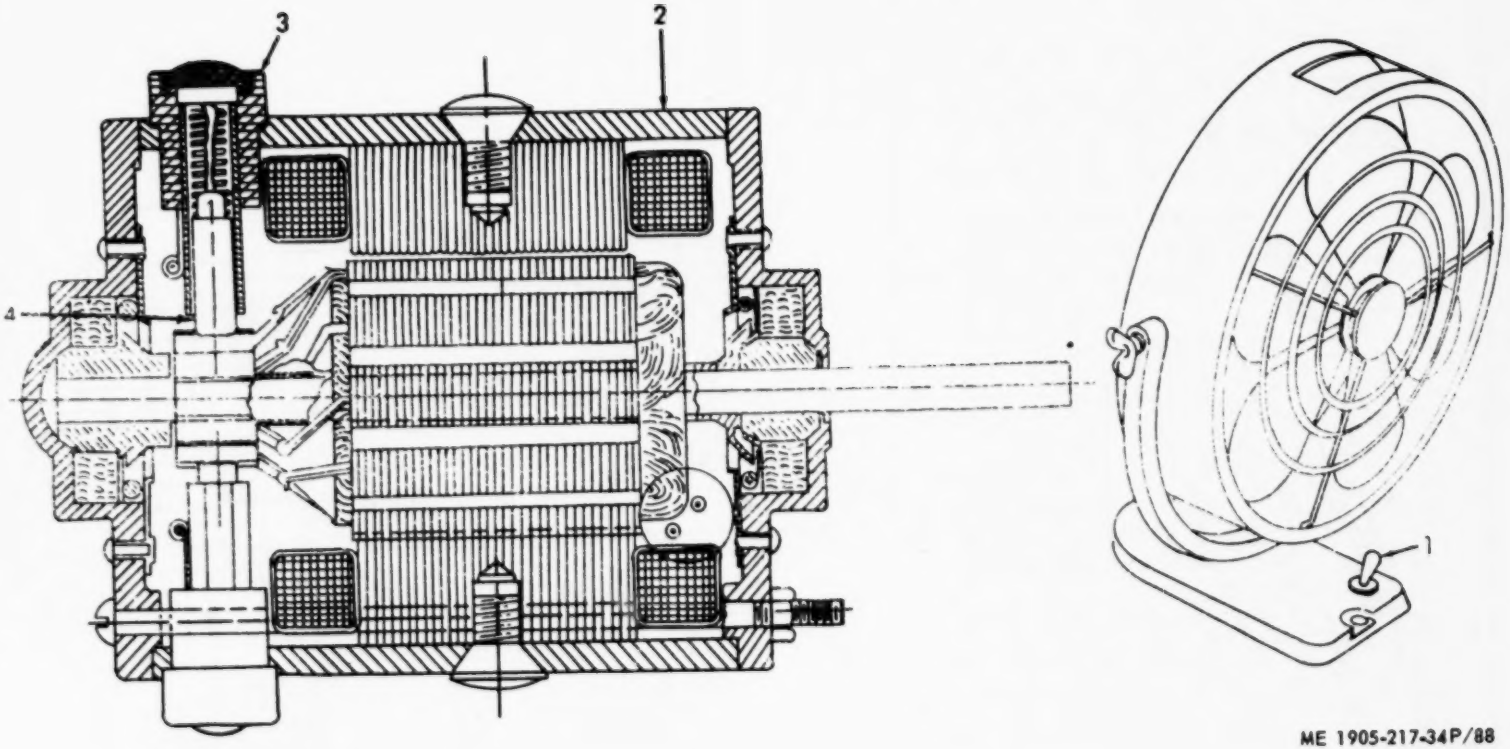

Figure 88. Fan Engine Boom

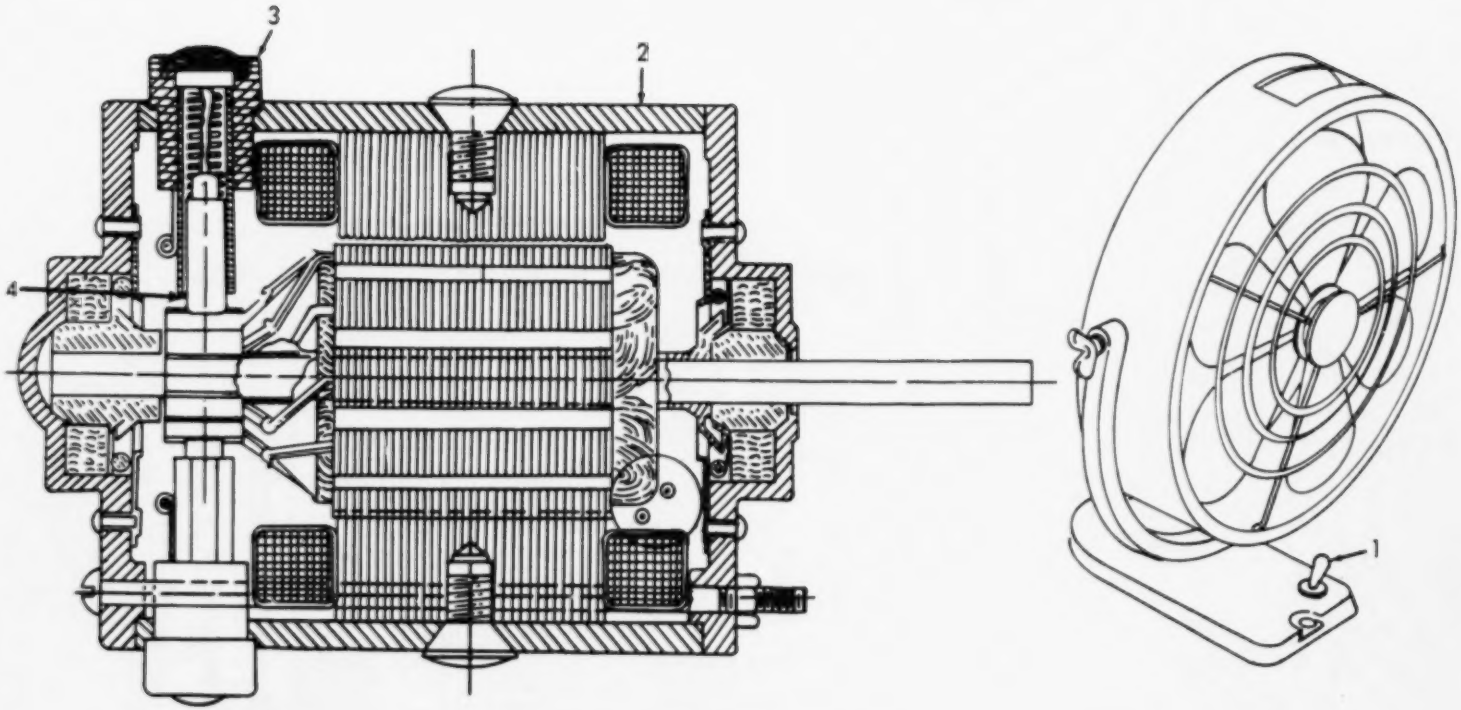

ME 1905-217-34P/89

Figure 89. Fan Engine Boom

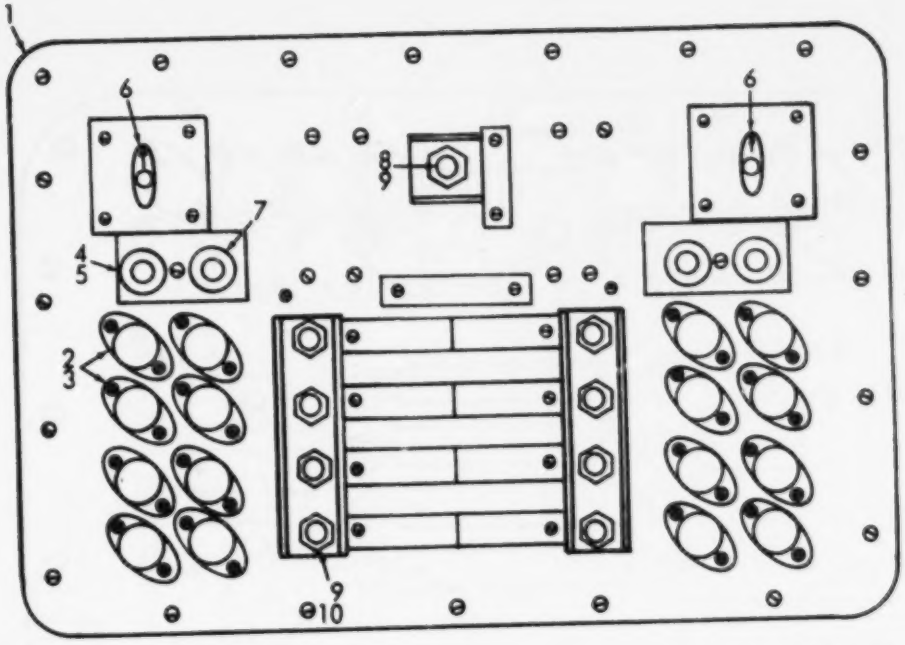

ME 1905-217-34P/90

Figure 90. Distribution Panel

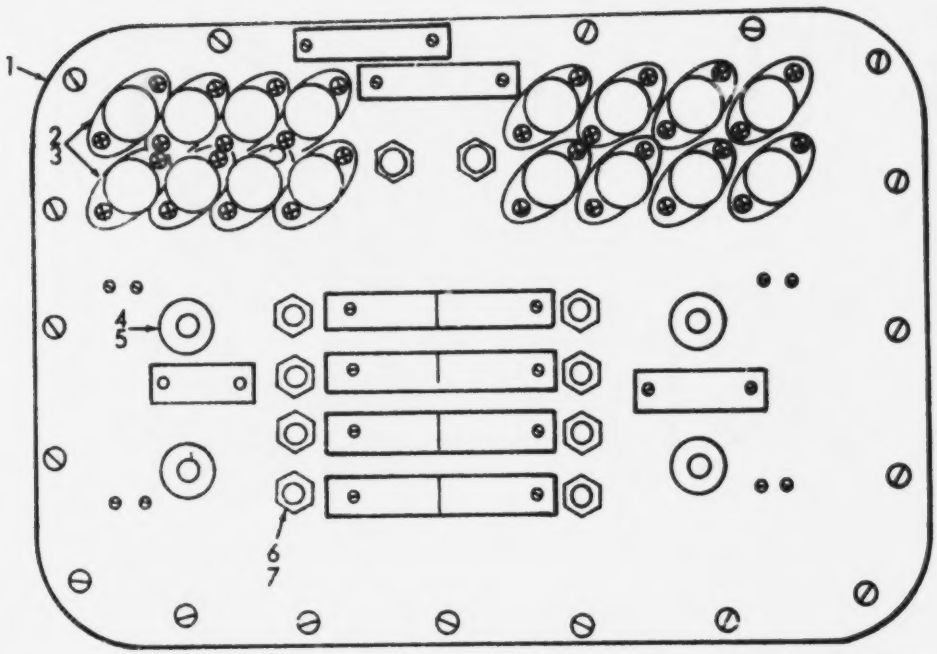

ME 1905-217-34P/91

Figure 91. Distribution Panel

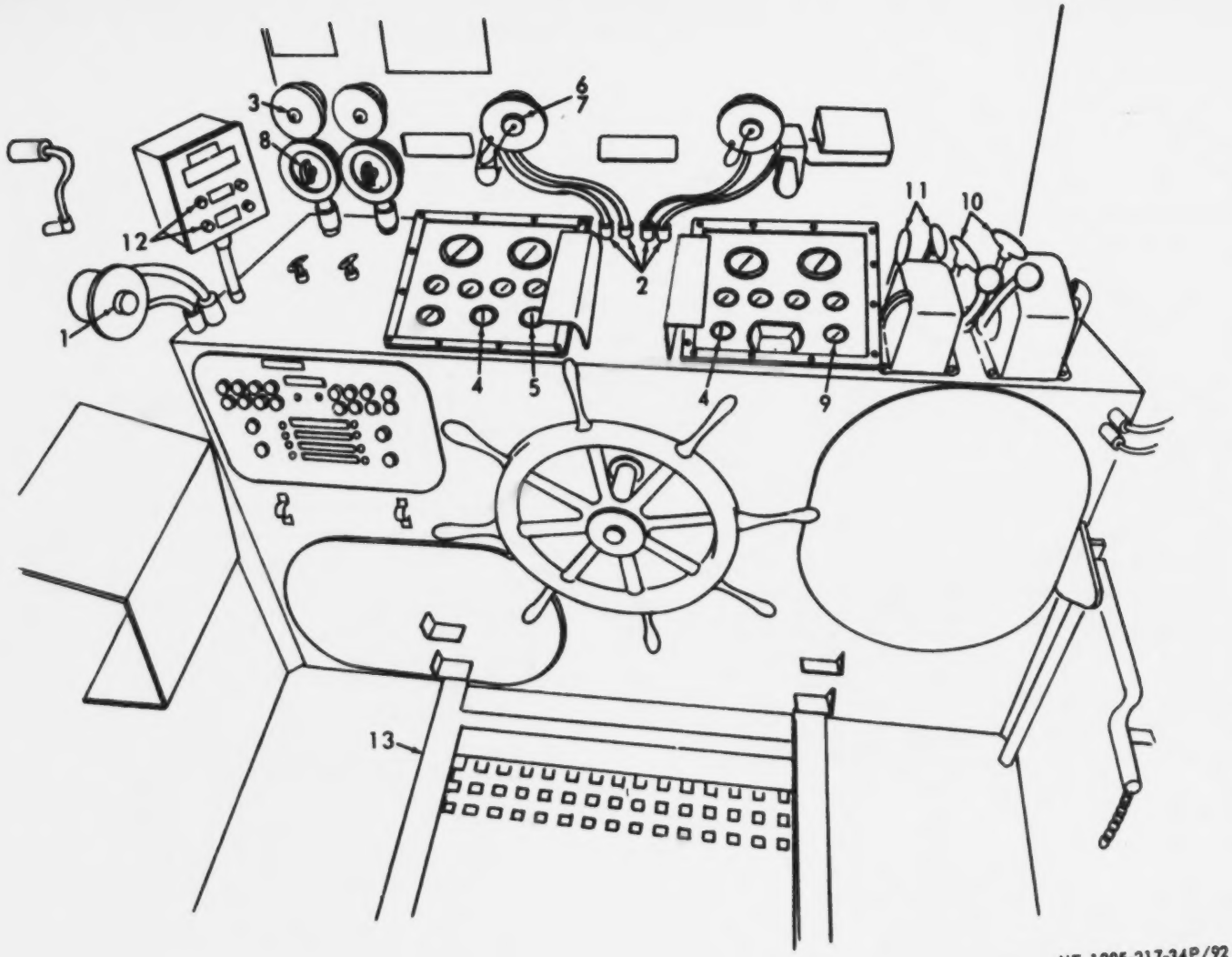

Figure 92. Cables, Gages and Lights

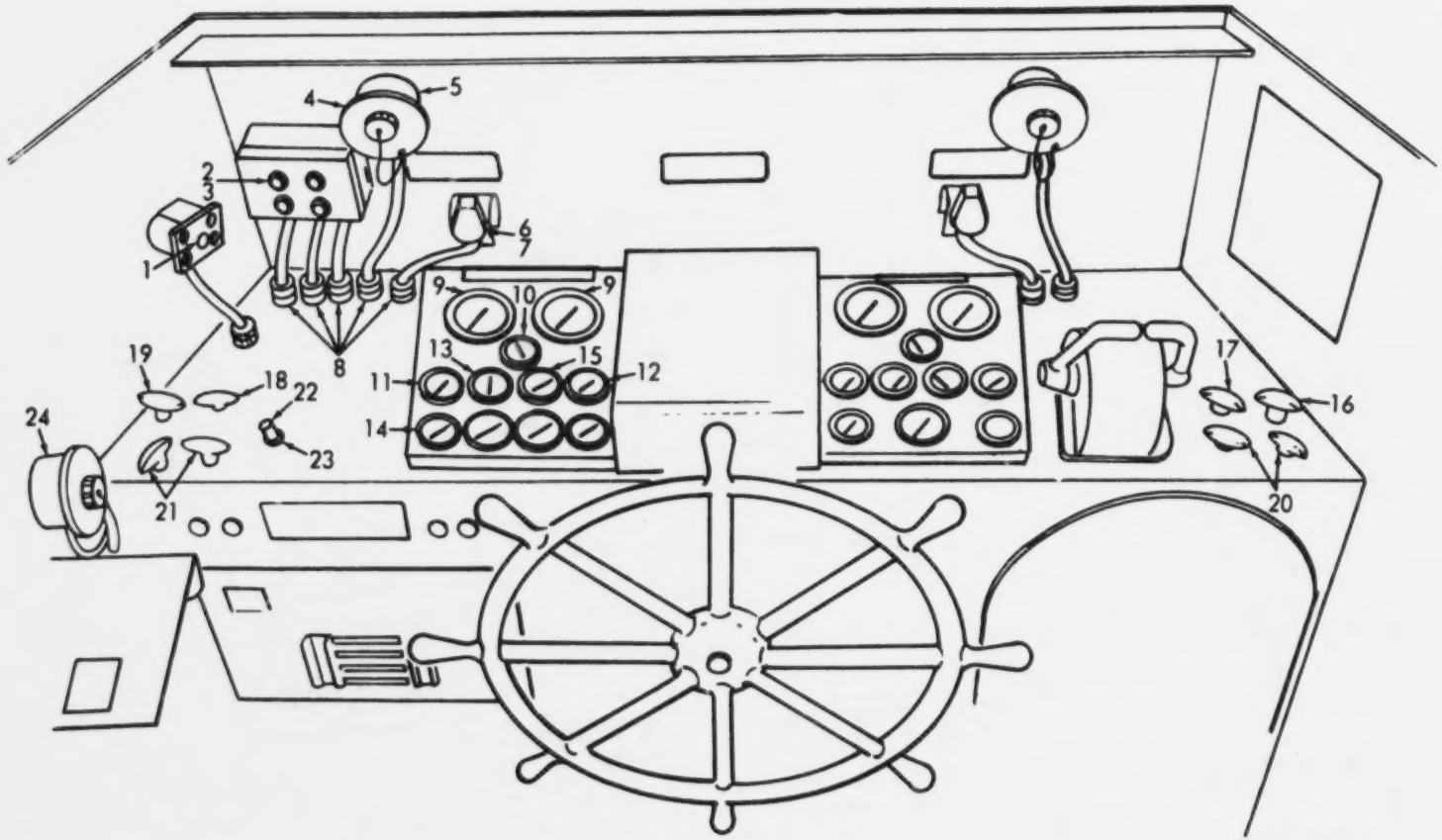

Figure 93. Indicator and Lights

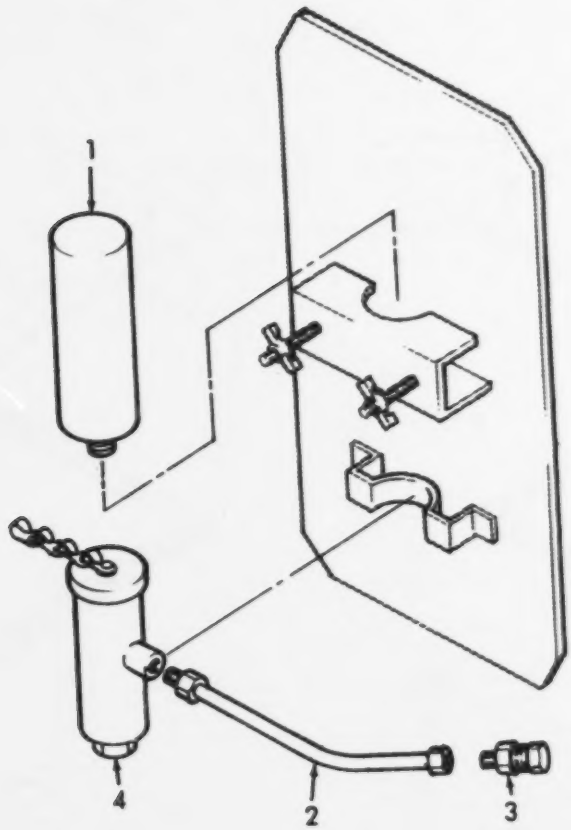

Figure 94. Ether Starting Aid

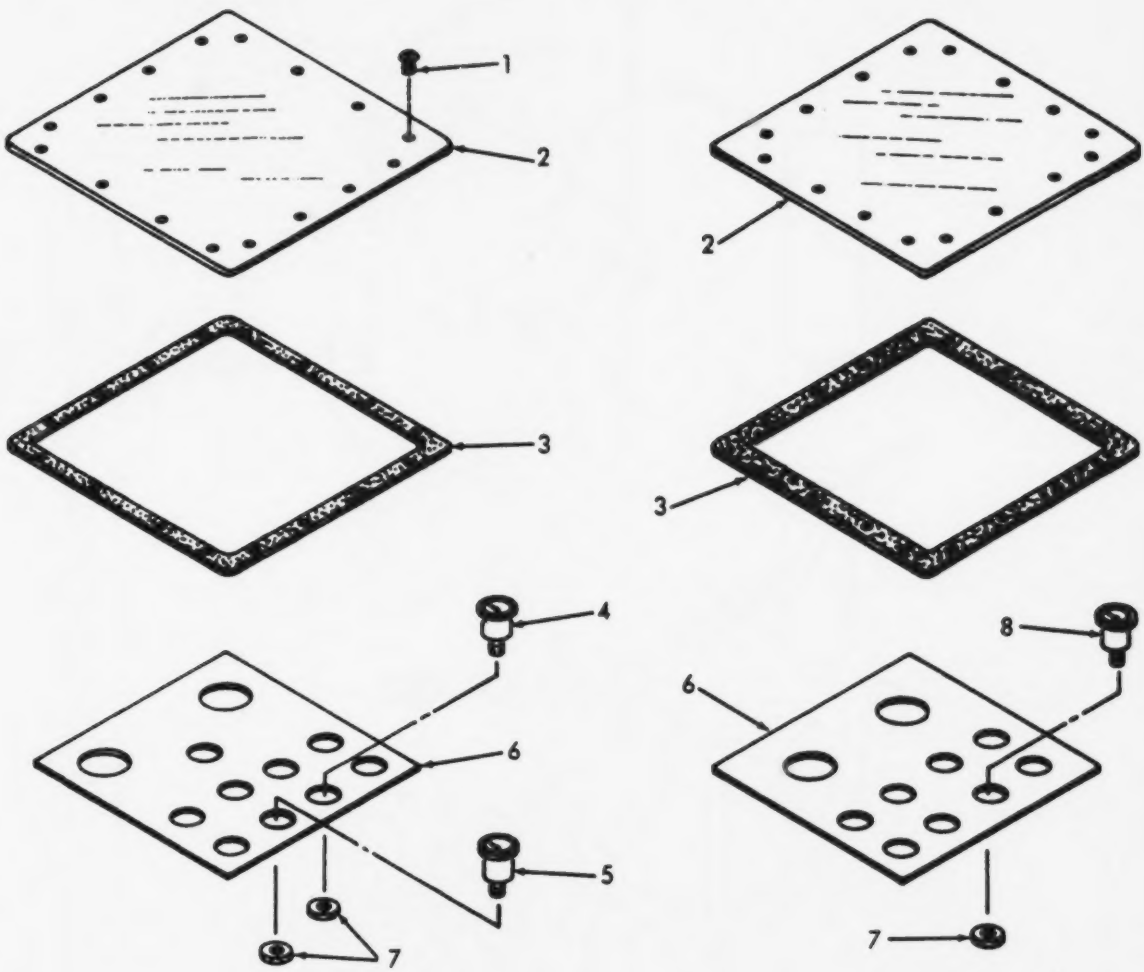

ME 1905-217-34P/95

Figure 95. Instruments and Plate

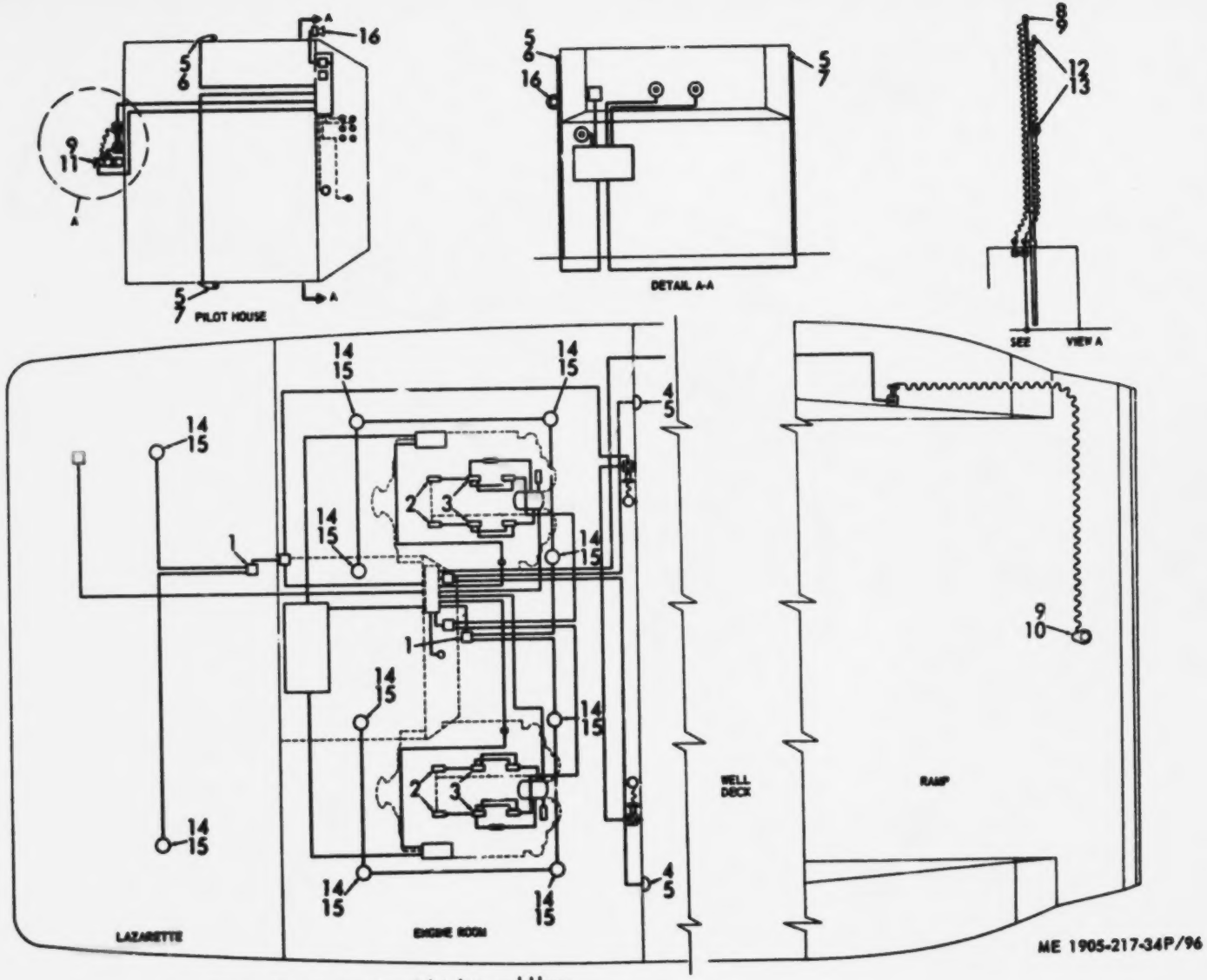

Figure 96. Navigational Lights and Horn

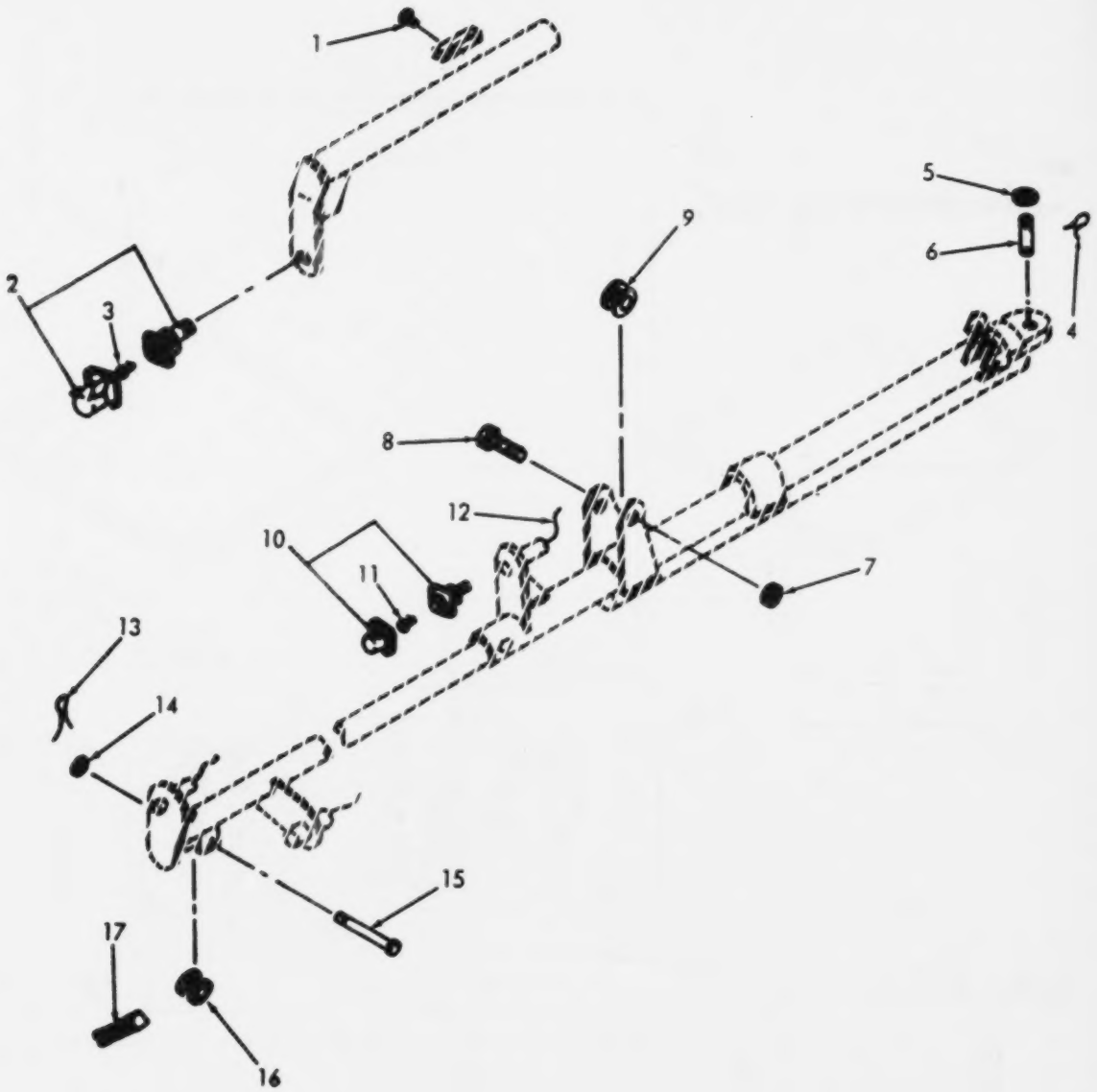

Figure 97. Forward and Main Mast

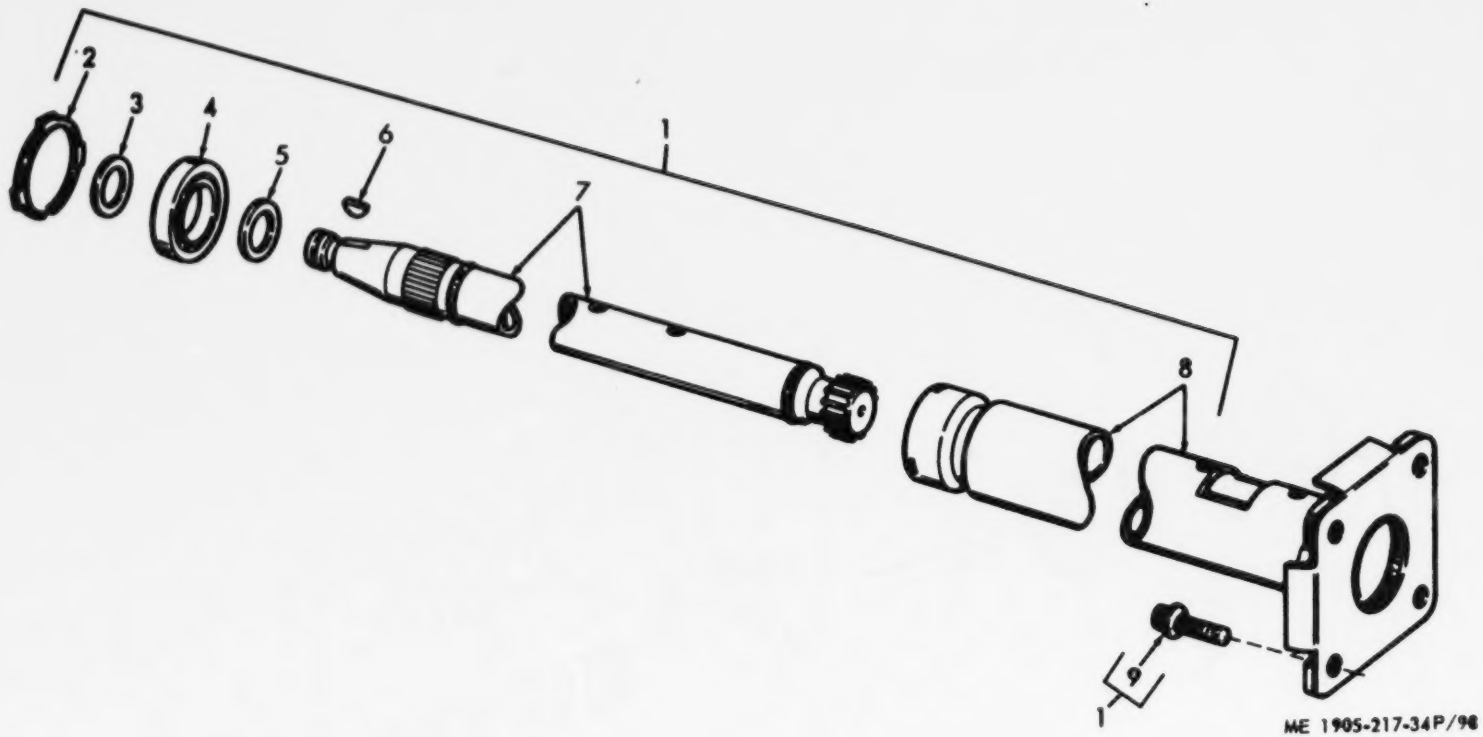

Figure 98. Steering Column

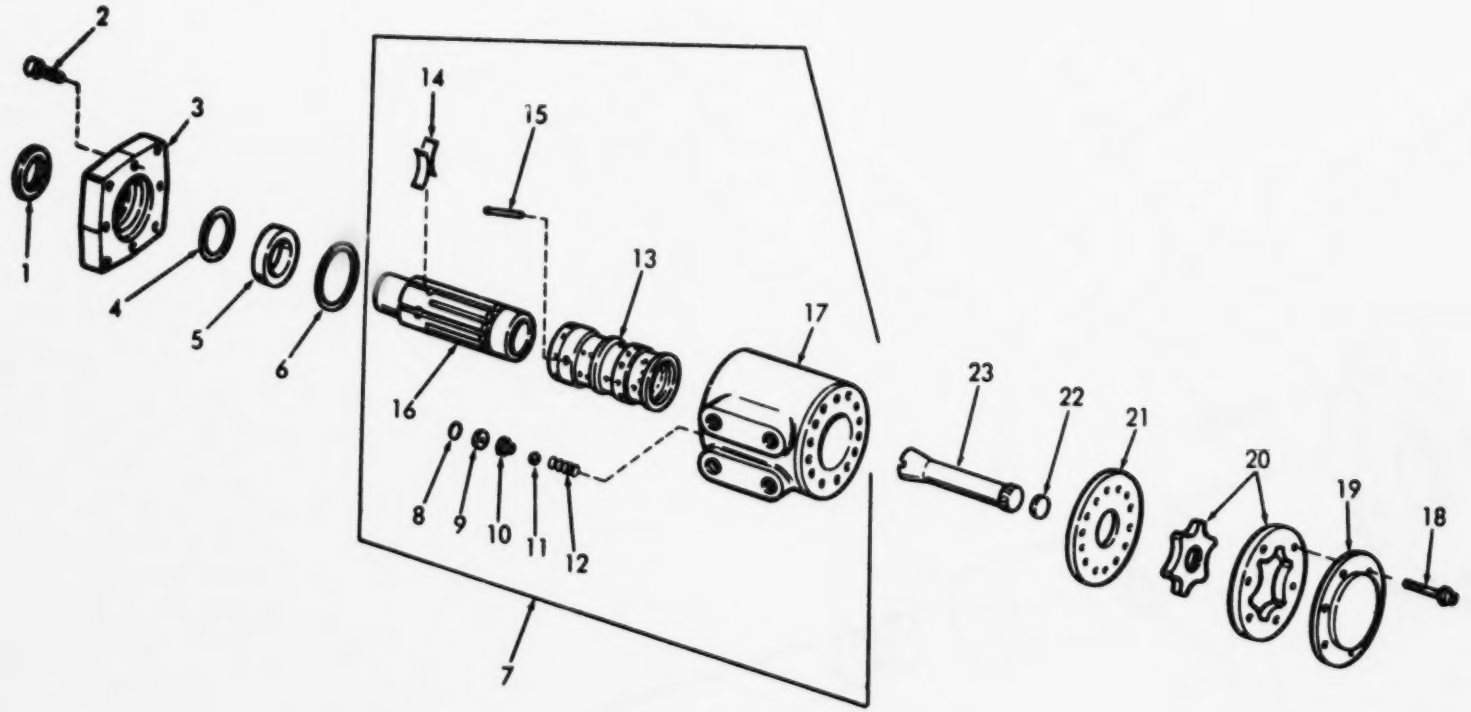

ME 1905-217-34P/99

Figure 99. Steering control

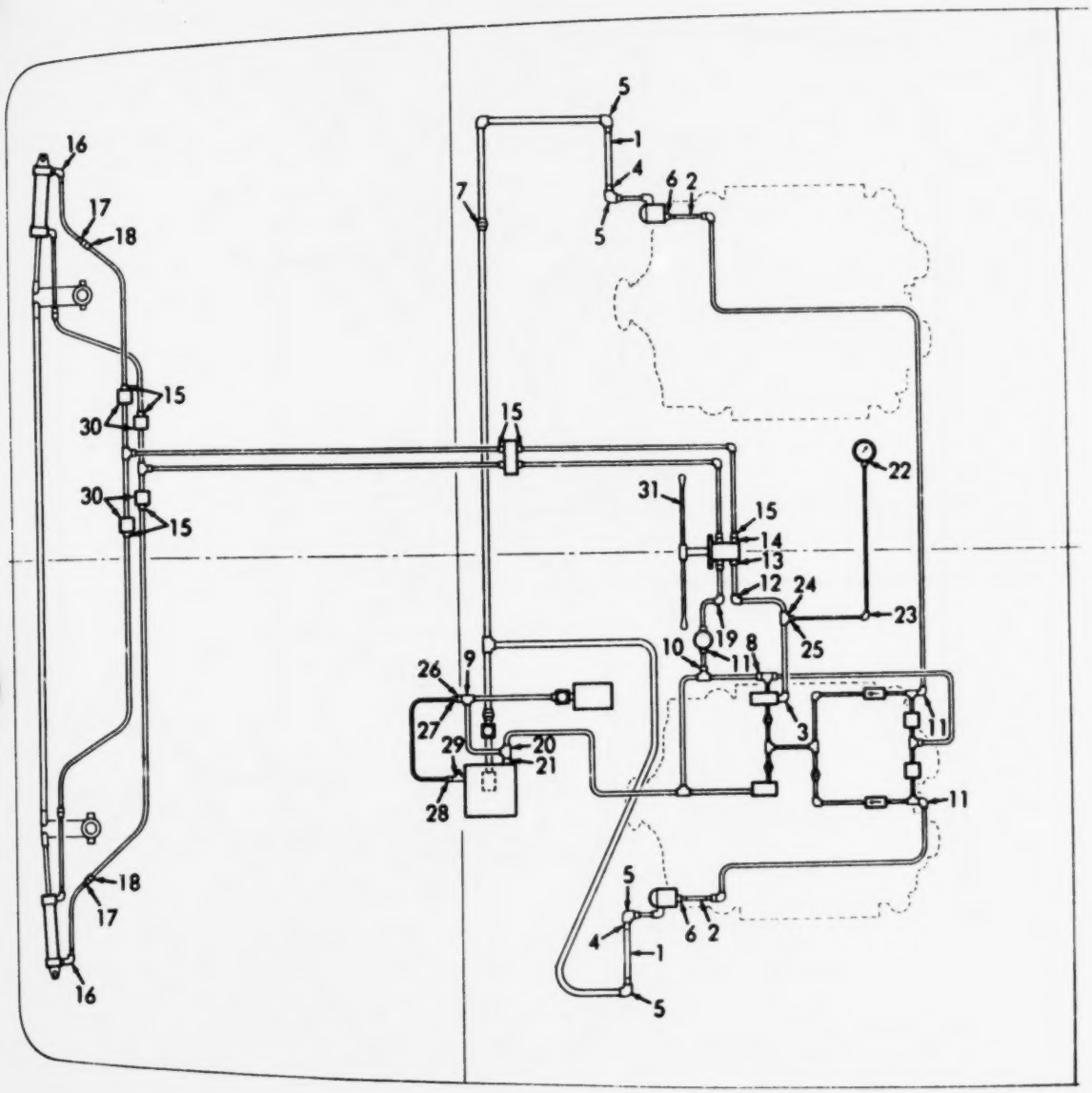

Figure 100. Piping Steering

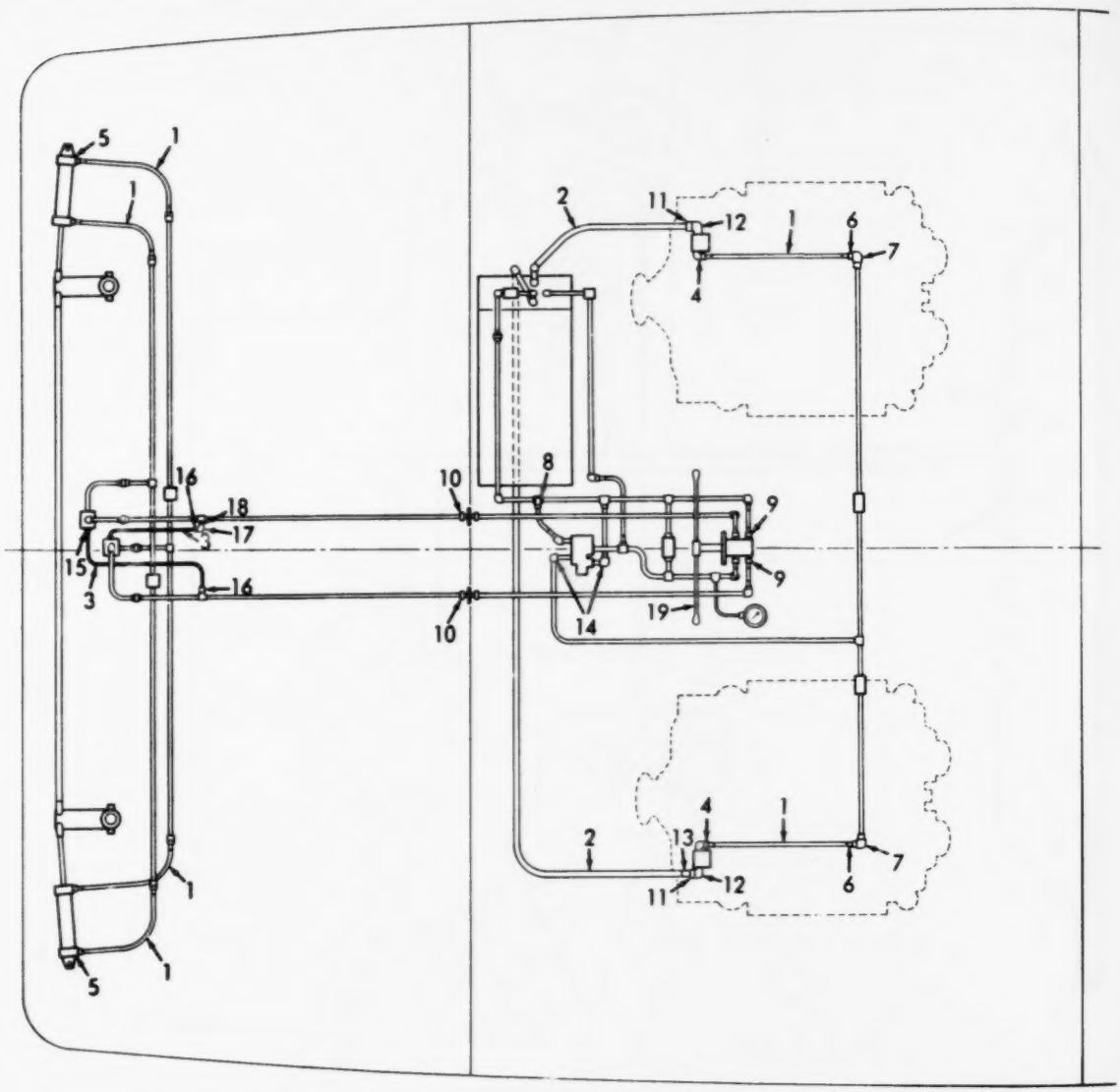

ME 1905-217-34P/101

Figure 101. Piping Steering

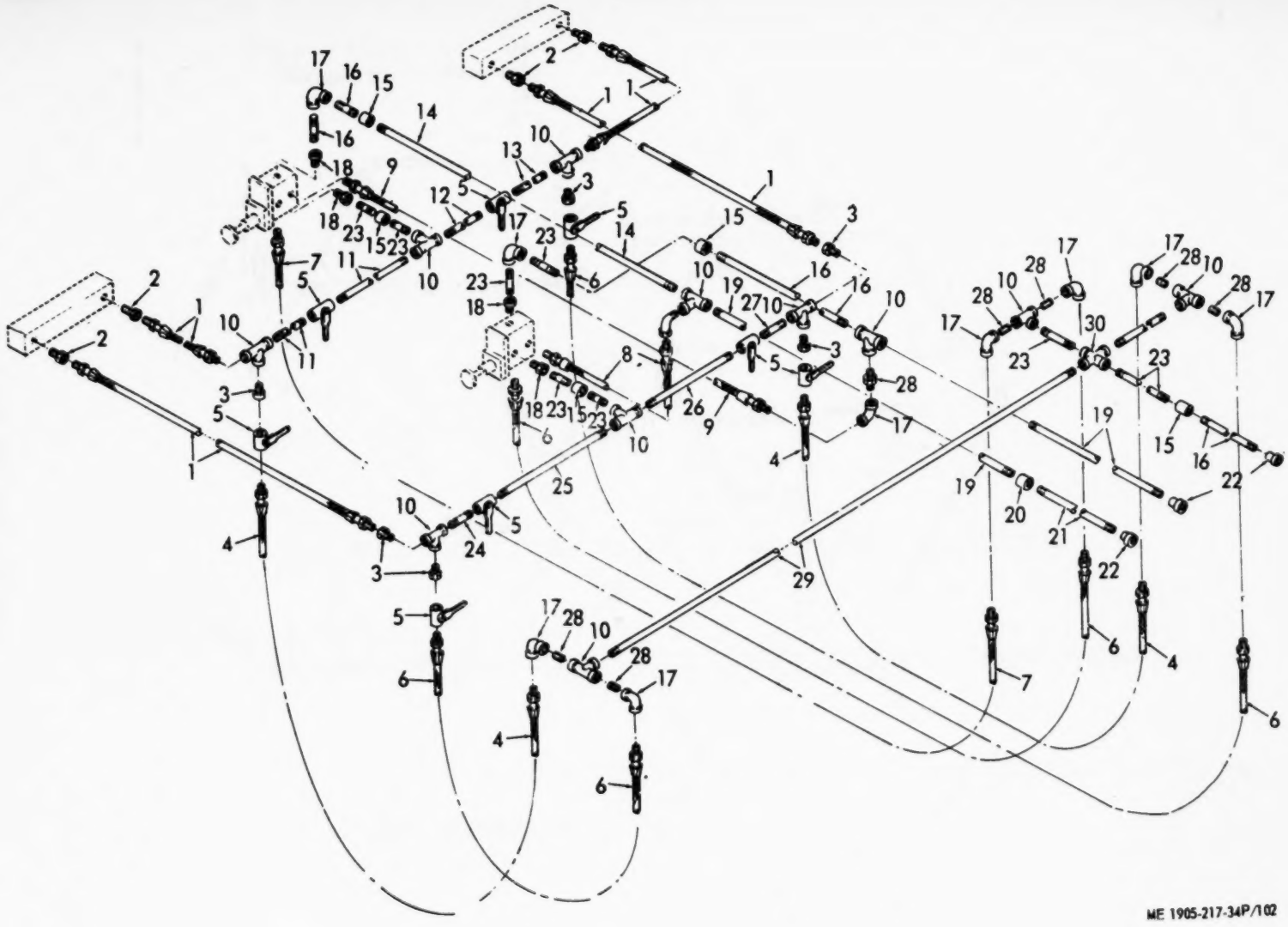

Figure 102. Piping Steering

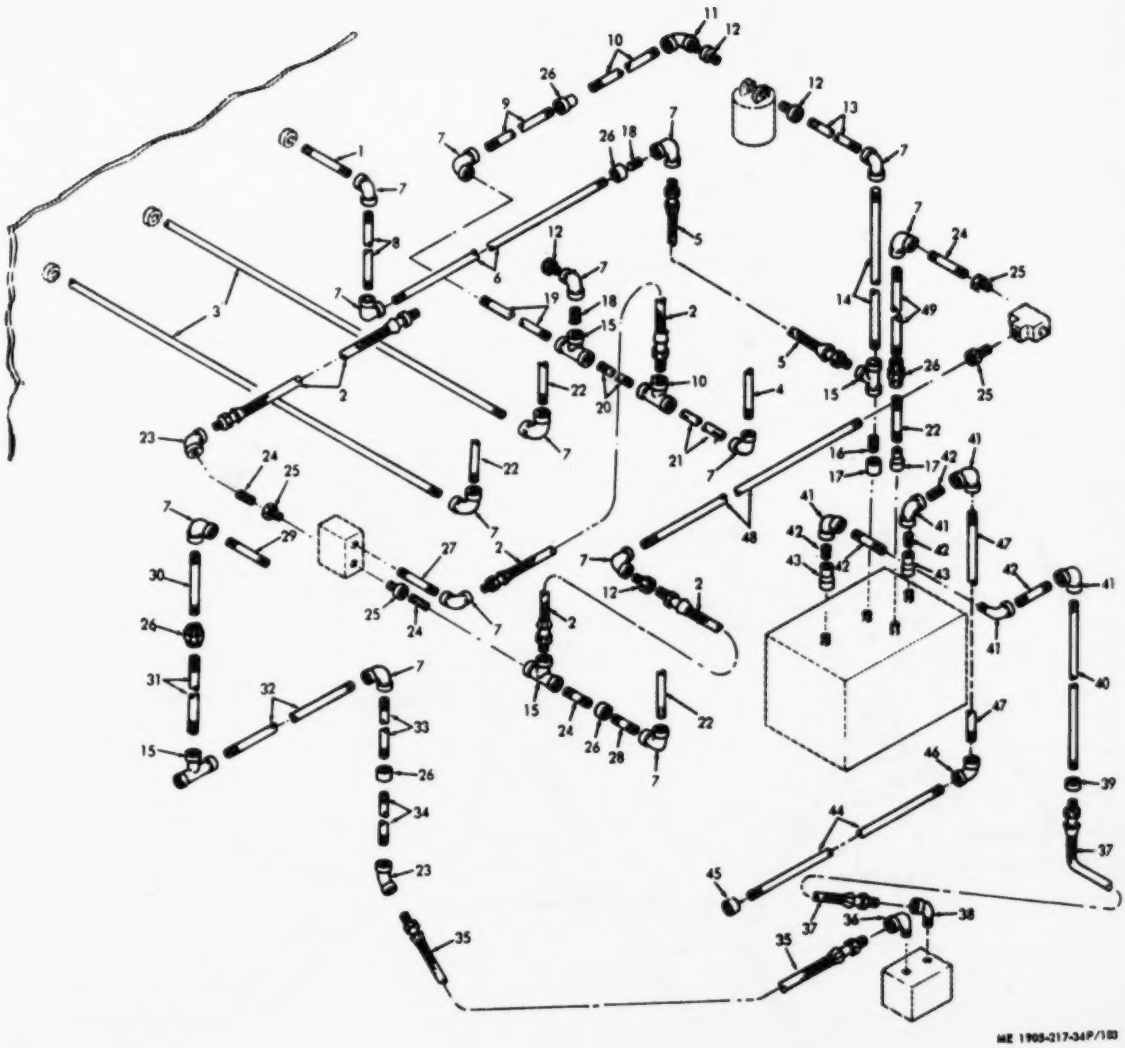

Figure 103. Piping Steering

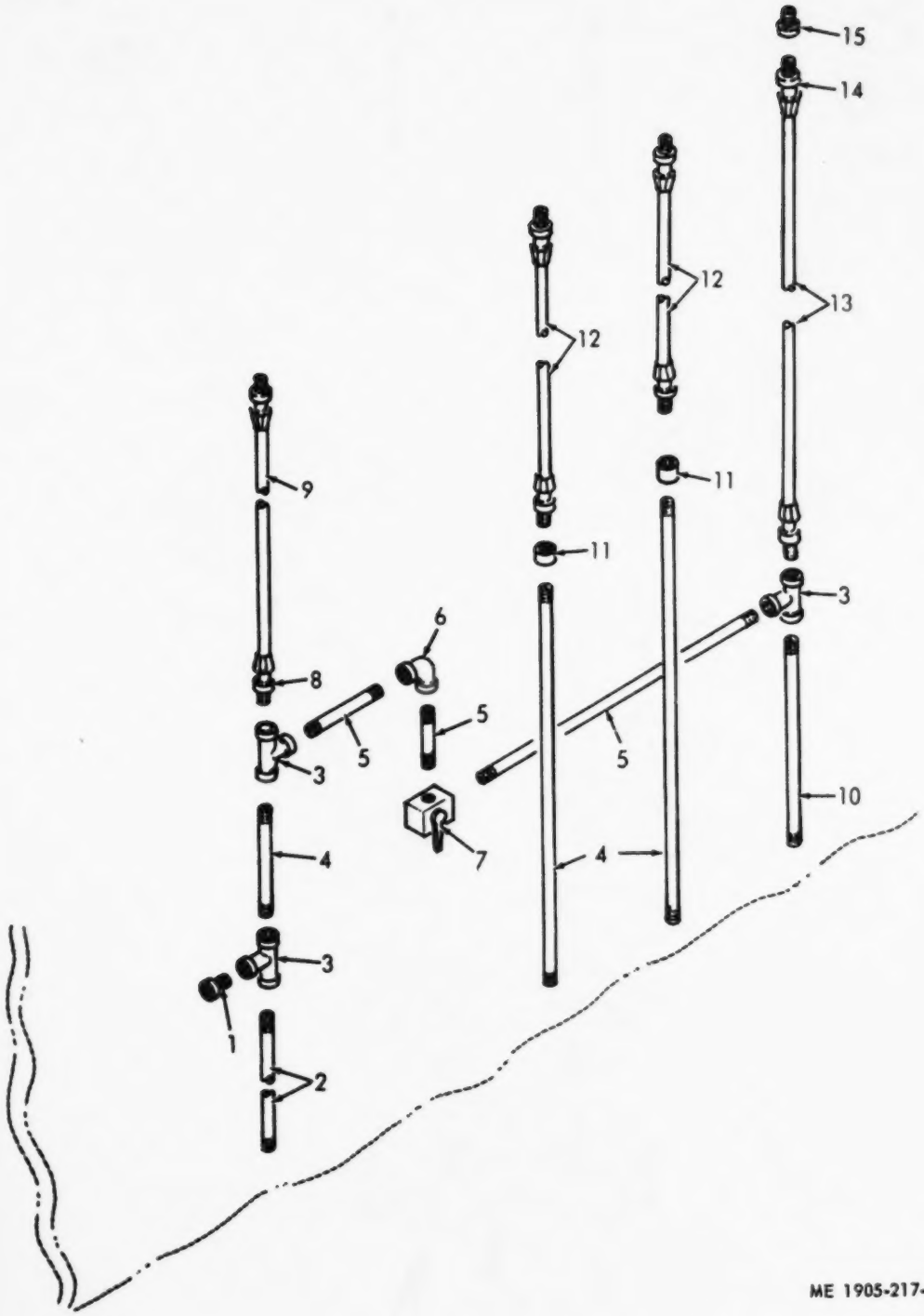

ME 1905-217-34P/104

Figure 104. Piping Steering

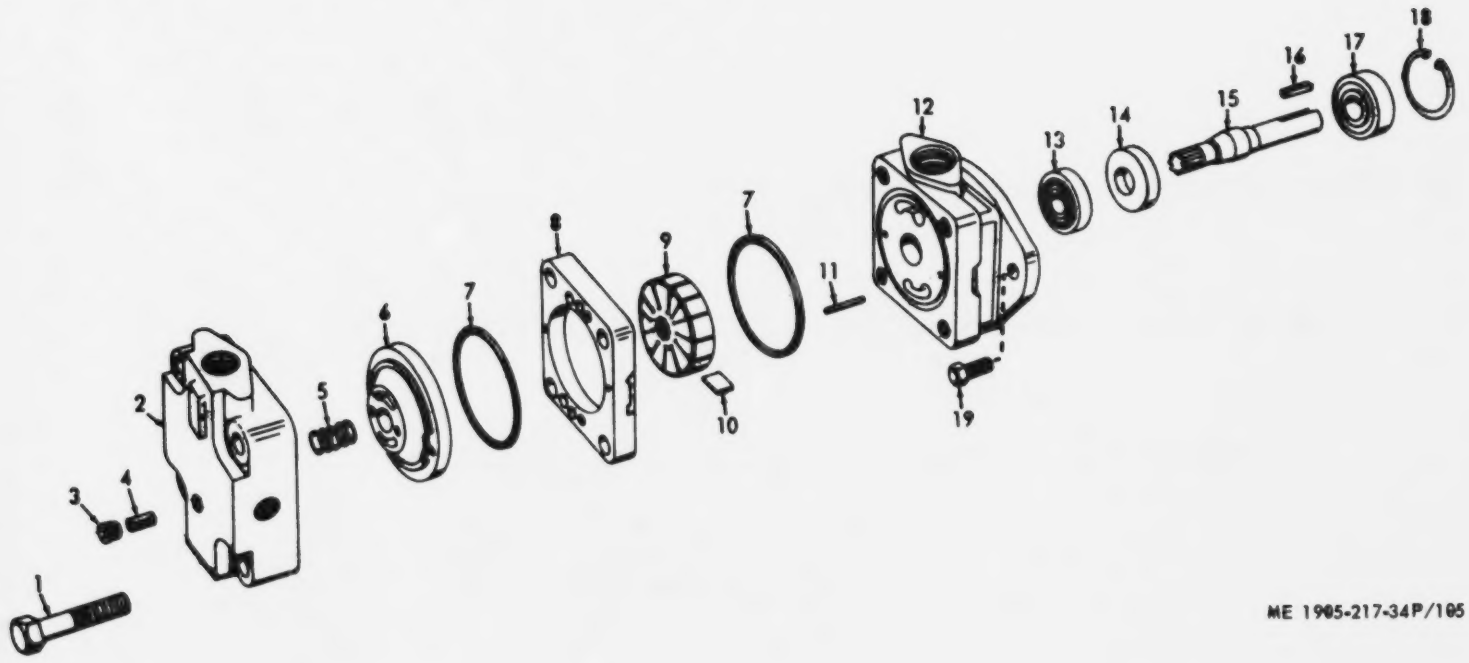

ME 1905-217-34P/105

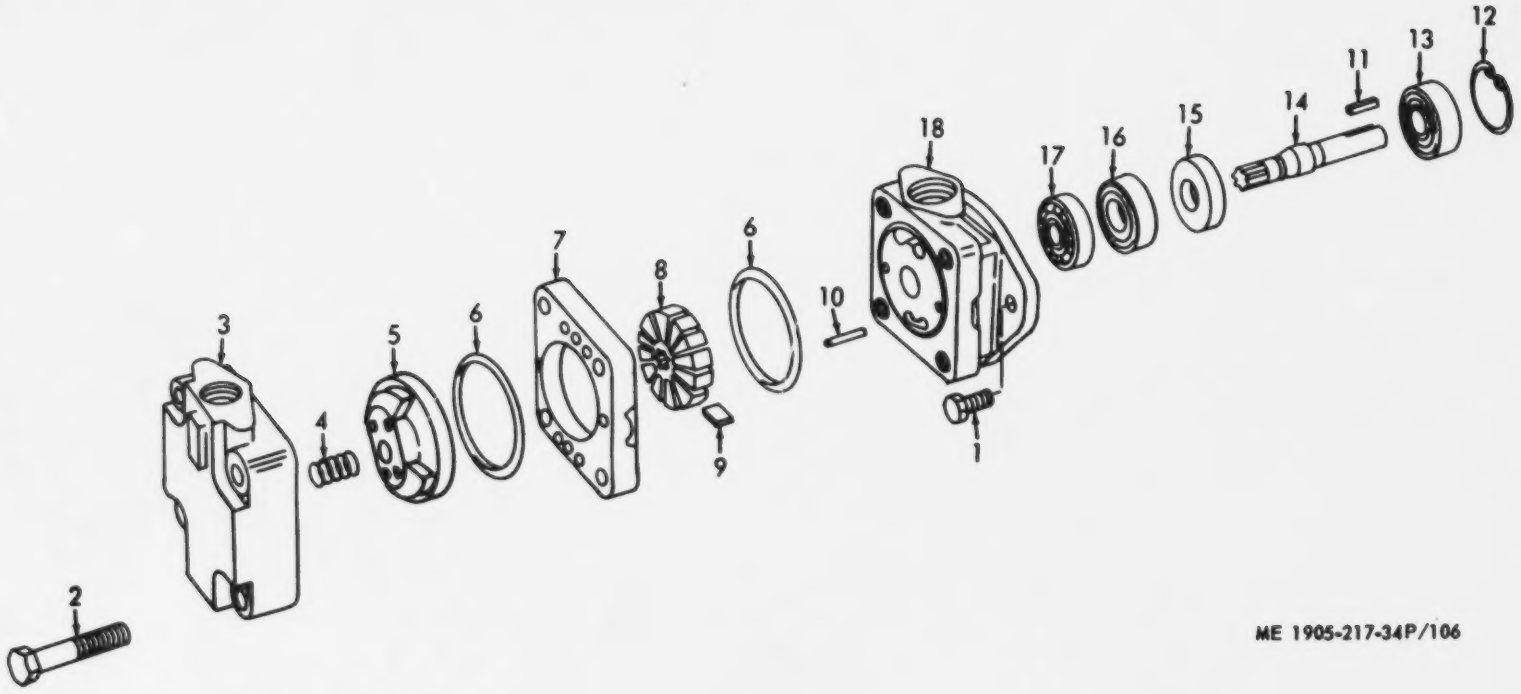

Figure 106. Pump, Steering

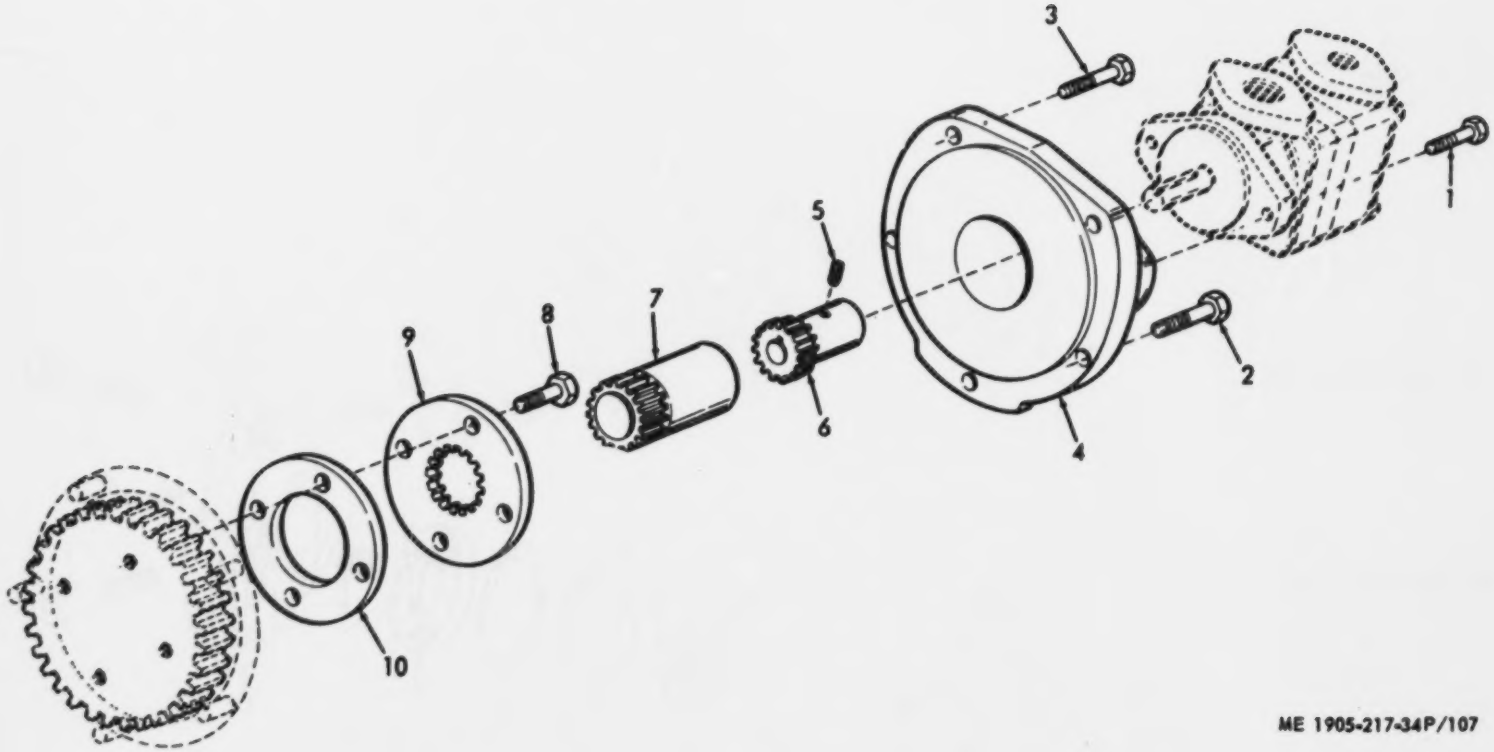

ME 1905-217-34P/107

Figure 107, Pump Drive (Coupling)

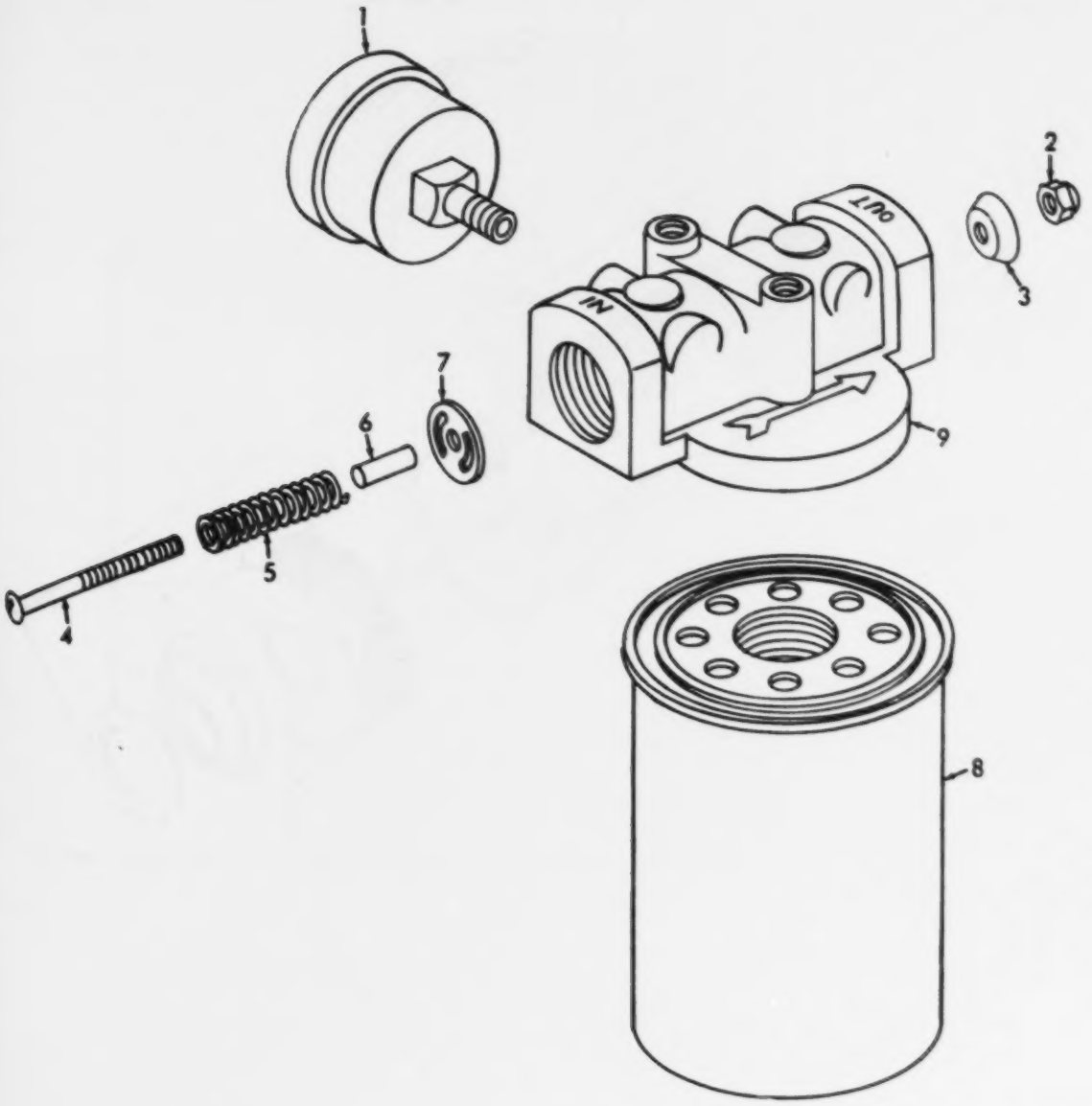

ME 1905-217-34P/108

Figure 108. Filters, Hydraulic

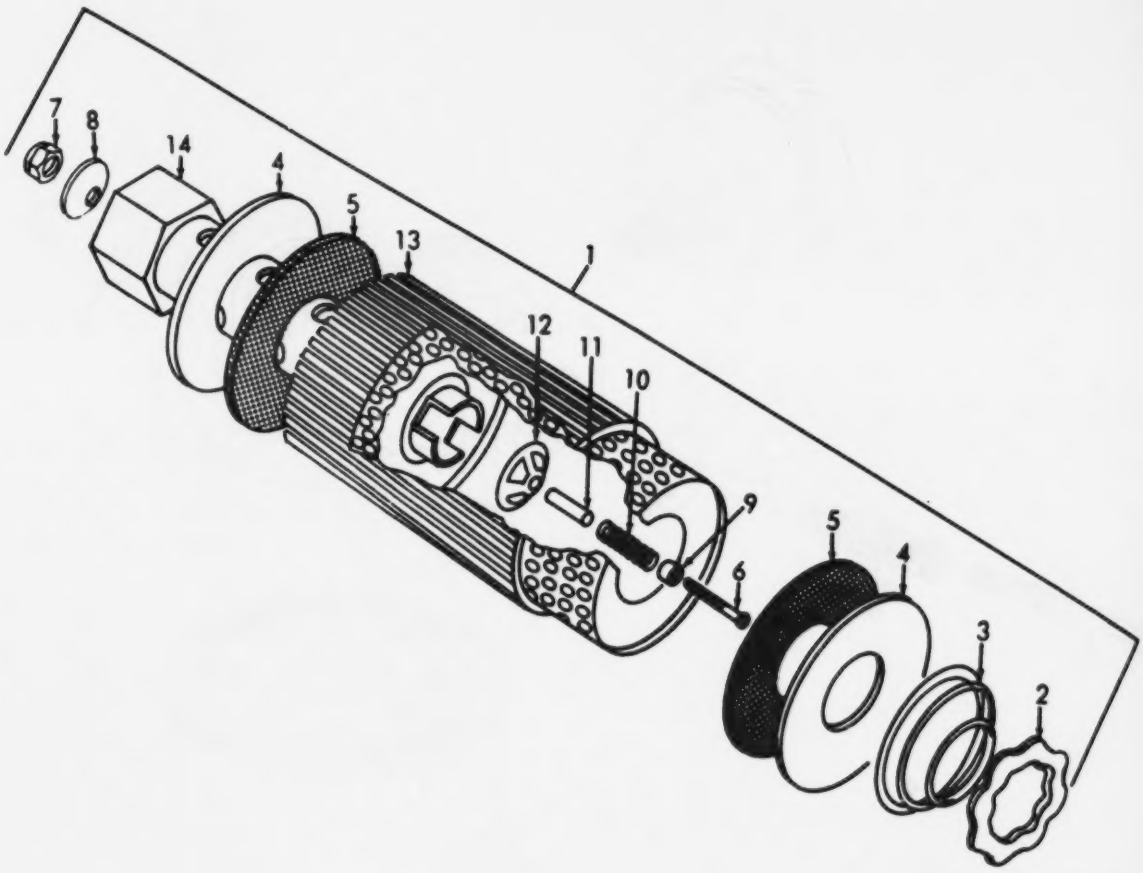

ME 1905-217-34P/109

Figure 109. Filters, Hydraulic

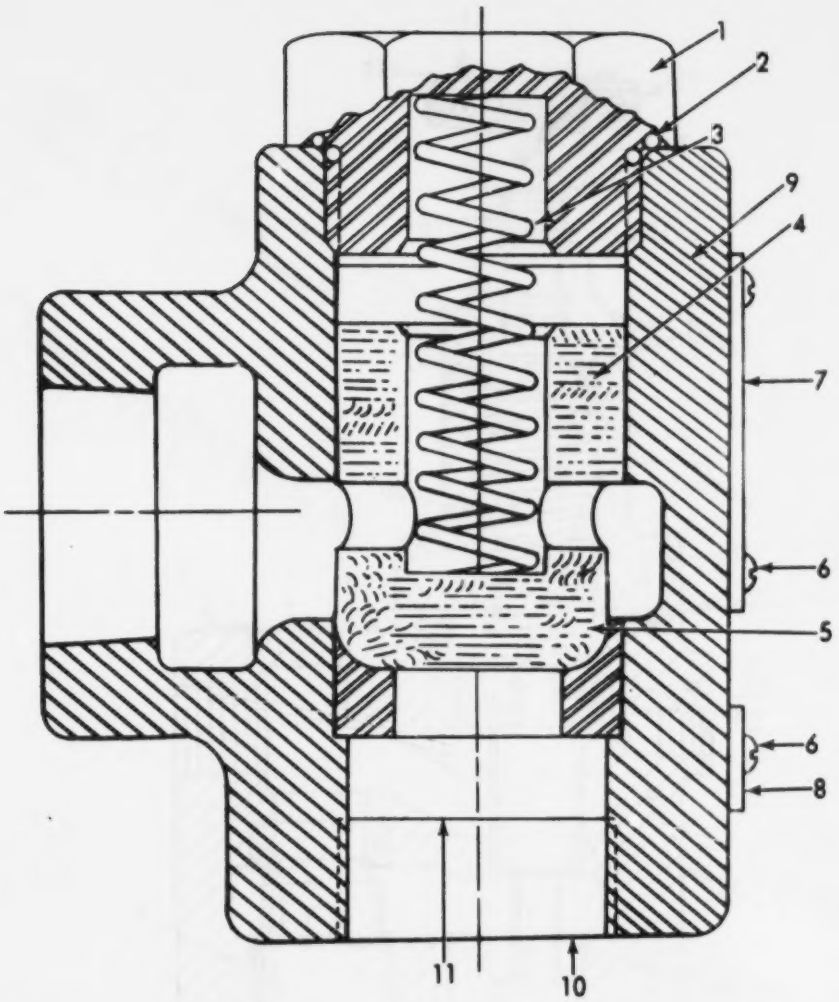

ME 1905-217-34P/110

Figure 110. Valve, Check Steering

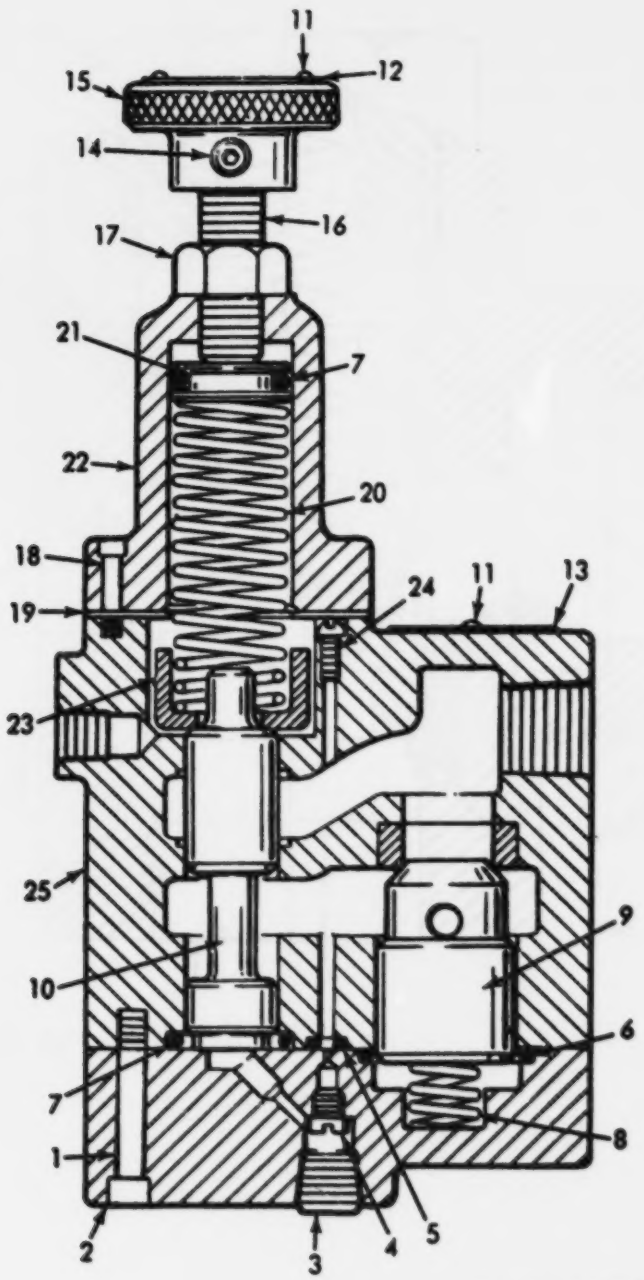

ME 1905-217-34P/111

Figure 111. Valve, By-Pass Steering

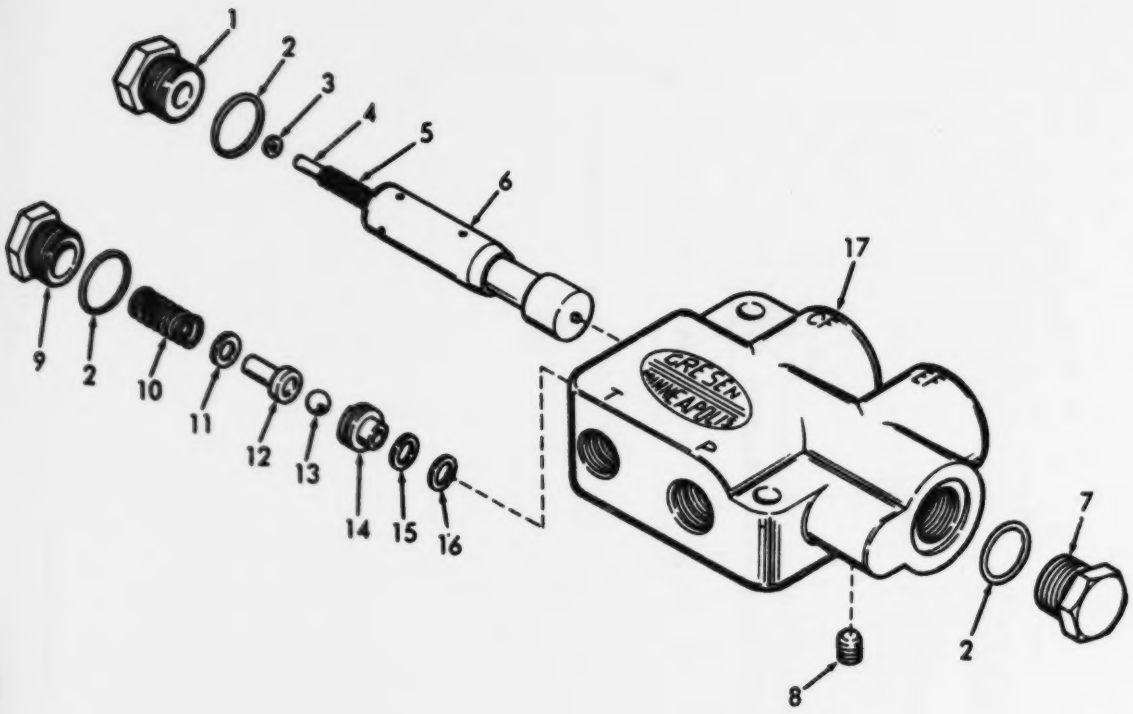

ME 1905-217-34P/112

Figure 112. Valve, Flow Divider

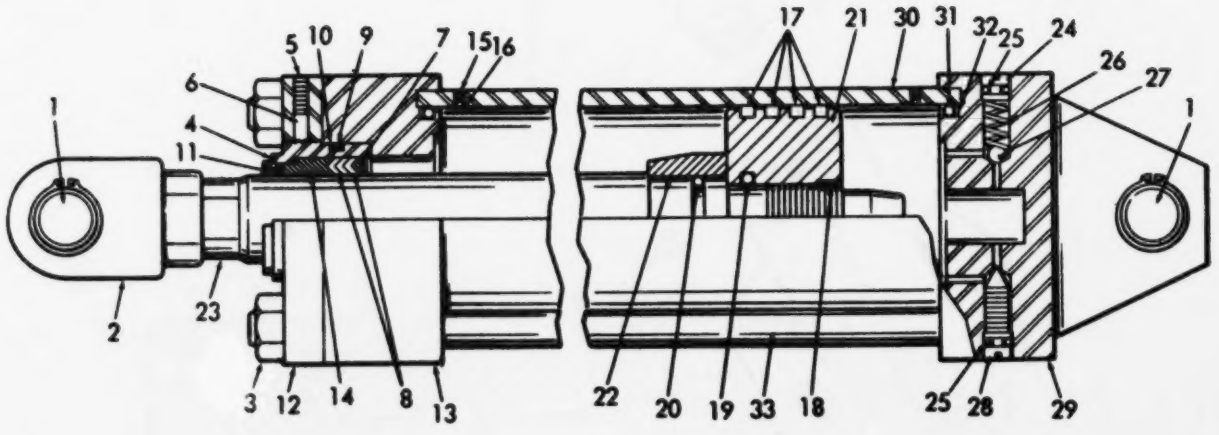

ME 1905-217-34P/113

Figure 113. Cylinder, Hydraulic Steering

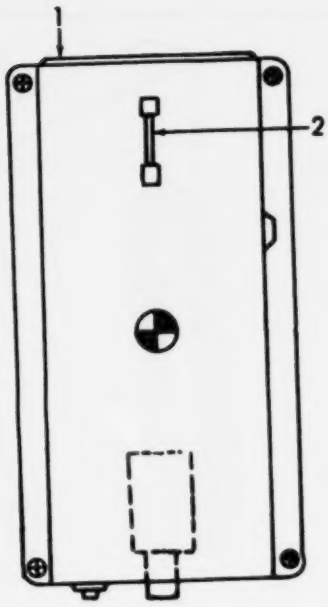

ME 1905-217-34P/114

Figure 114. Tank, Hydraulic

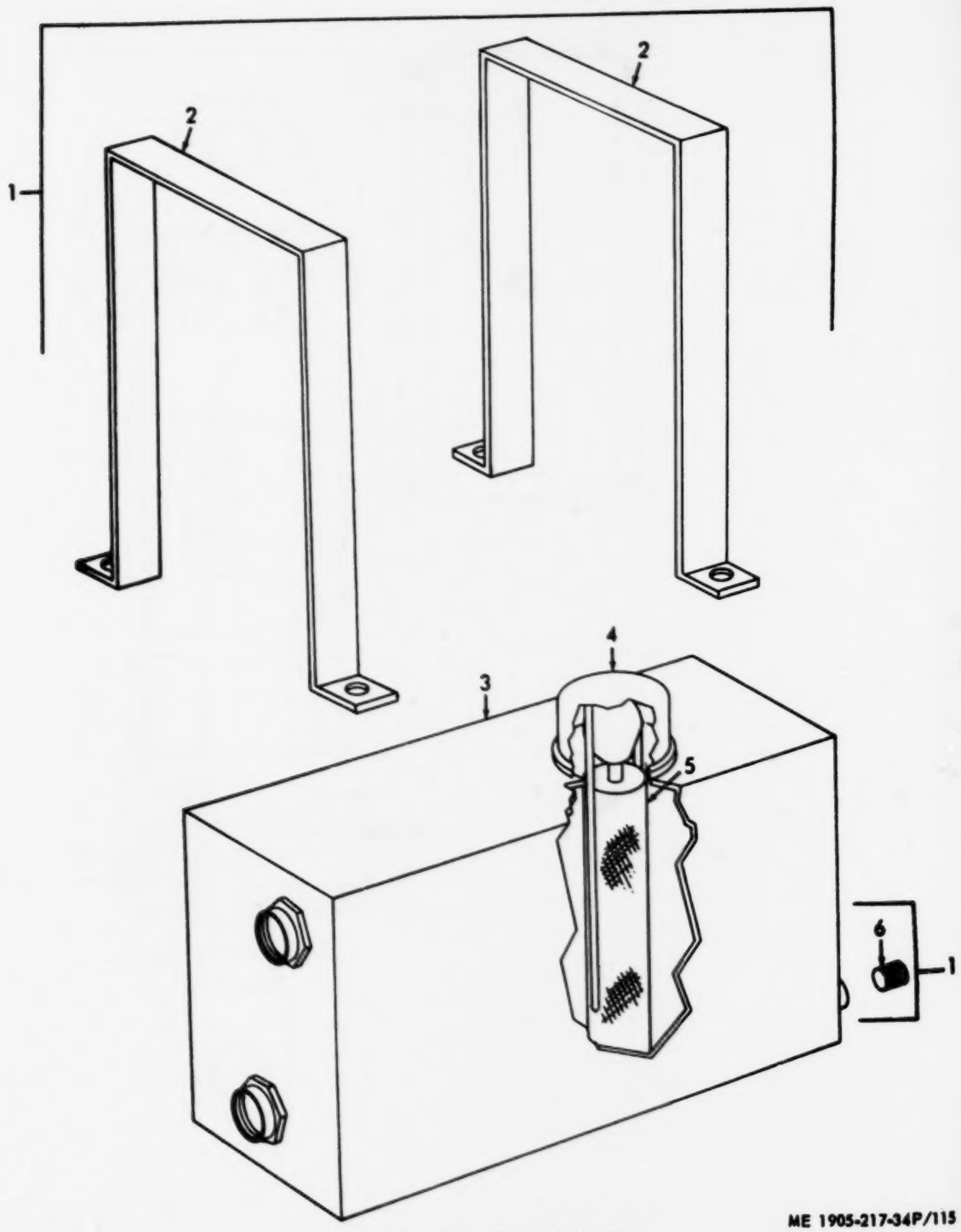

ME 1905-217-34P/115

Figure 115. Tank, Hydraulic

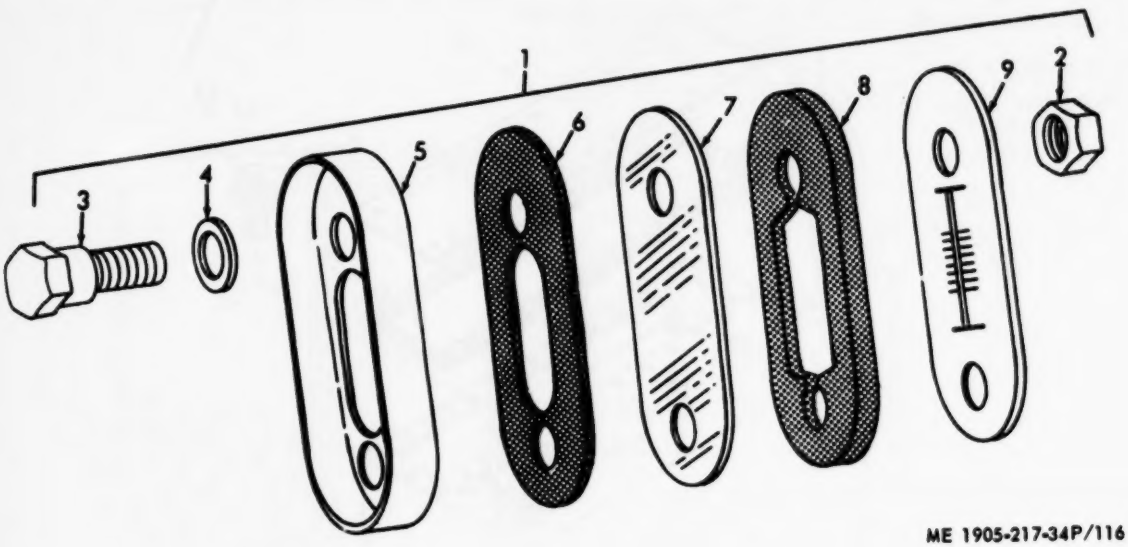

ME 1905-217-34P/116

Figure 116. Liquid Level Gage Sightglass

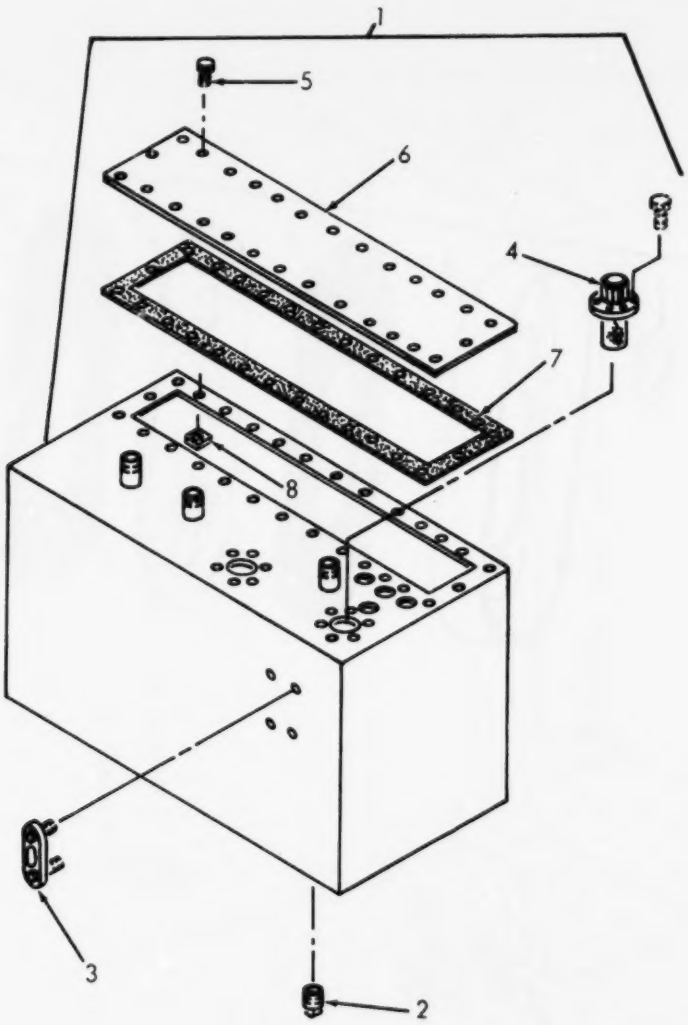

ME 1905-217-34P/117

Figure 117. Tank, Hydraulic

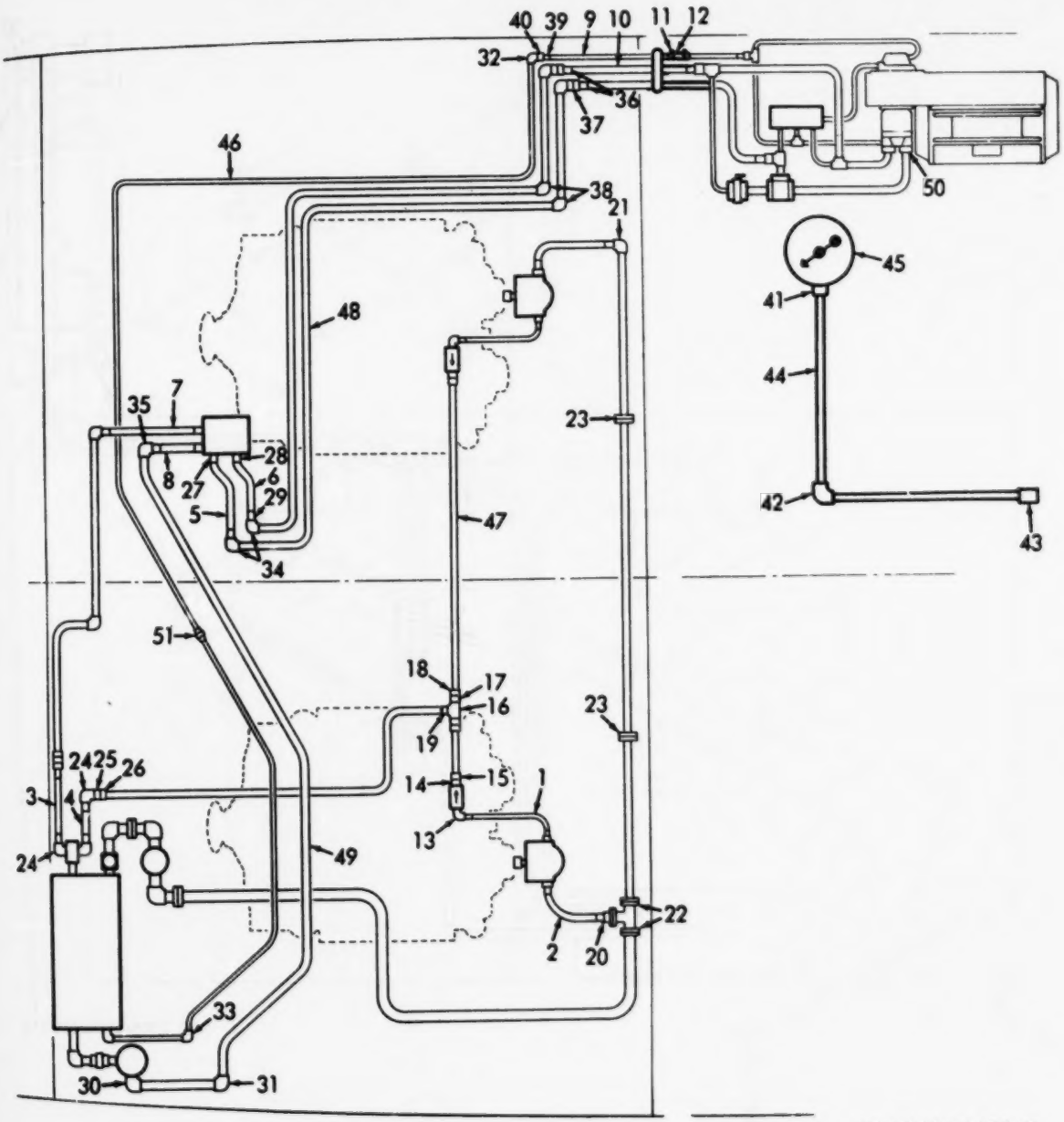

Figure 118. Piping, Hydraulic Ramp Hoist

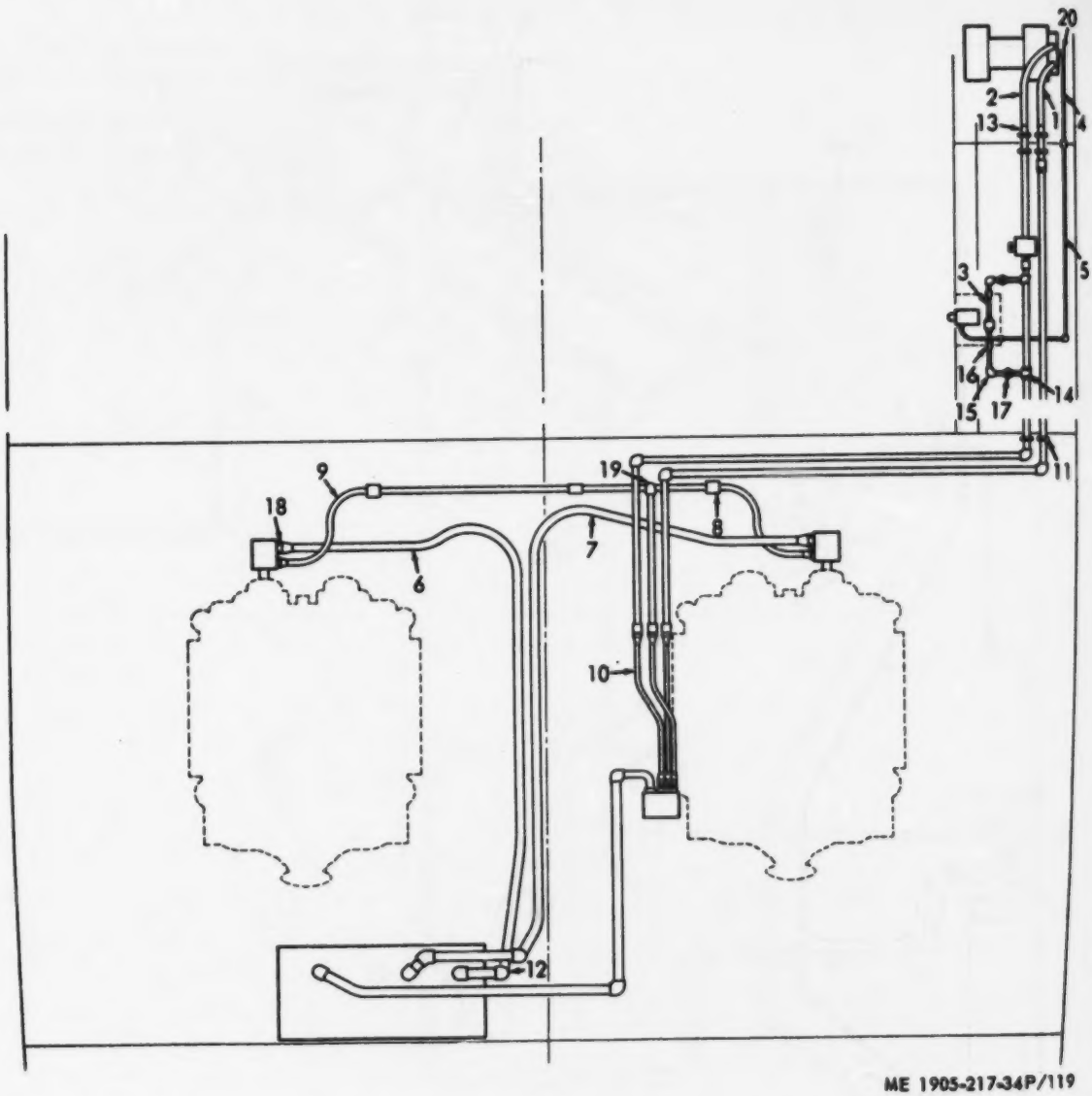

Figure 119. Piping, Hydraulic Ramp Hoist

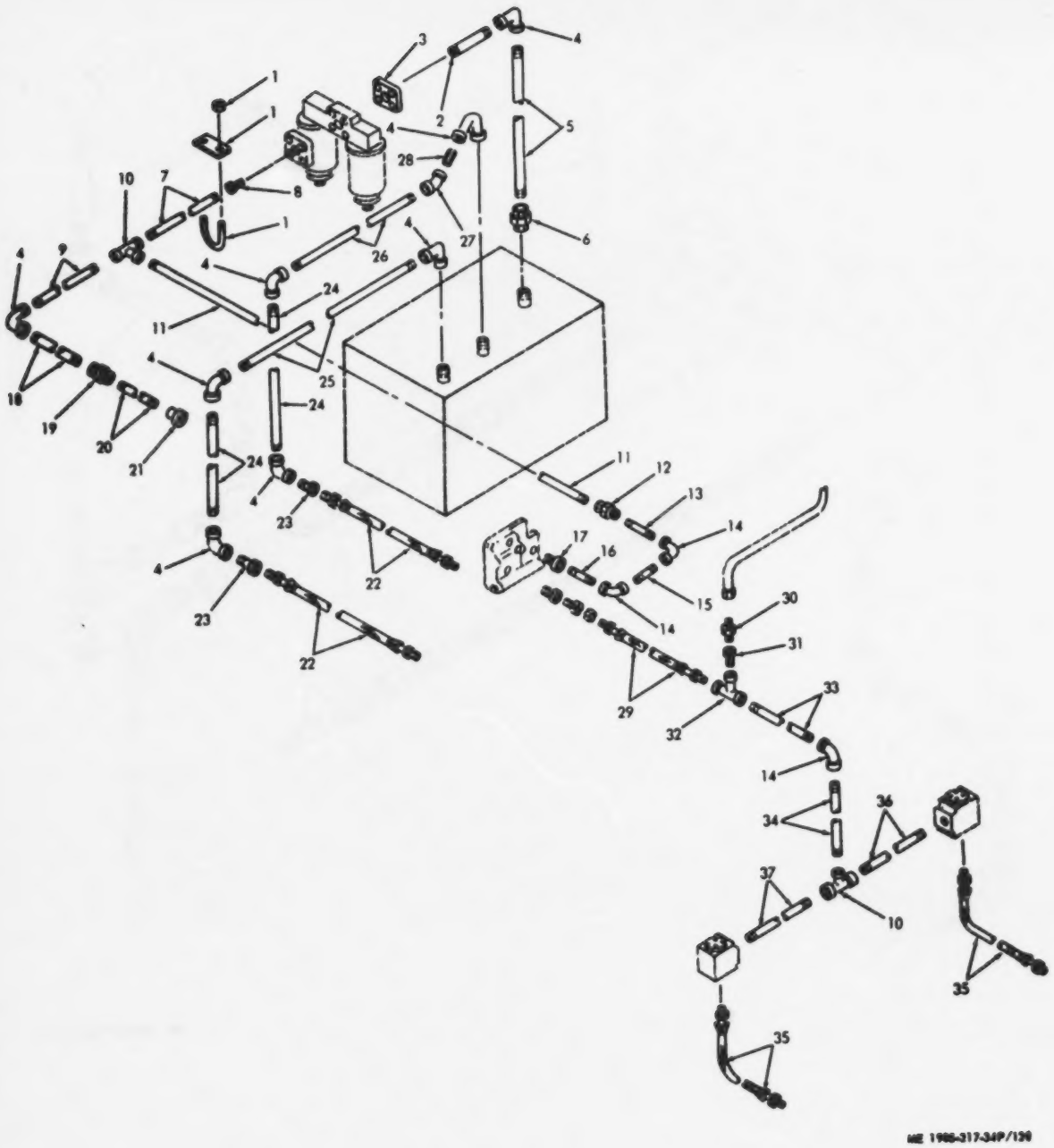

Figure 120. Piping, Hydraulic Ramp Hoist

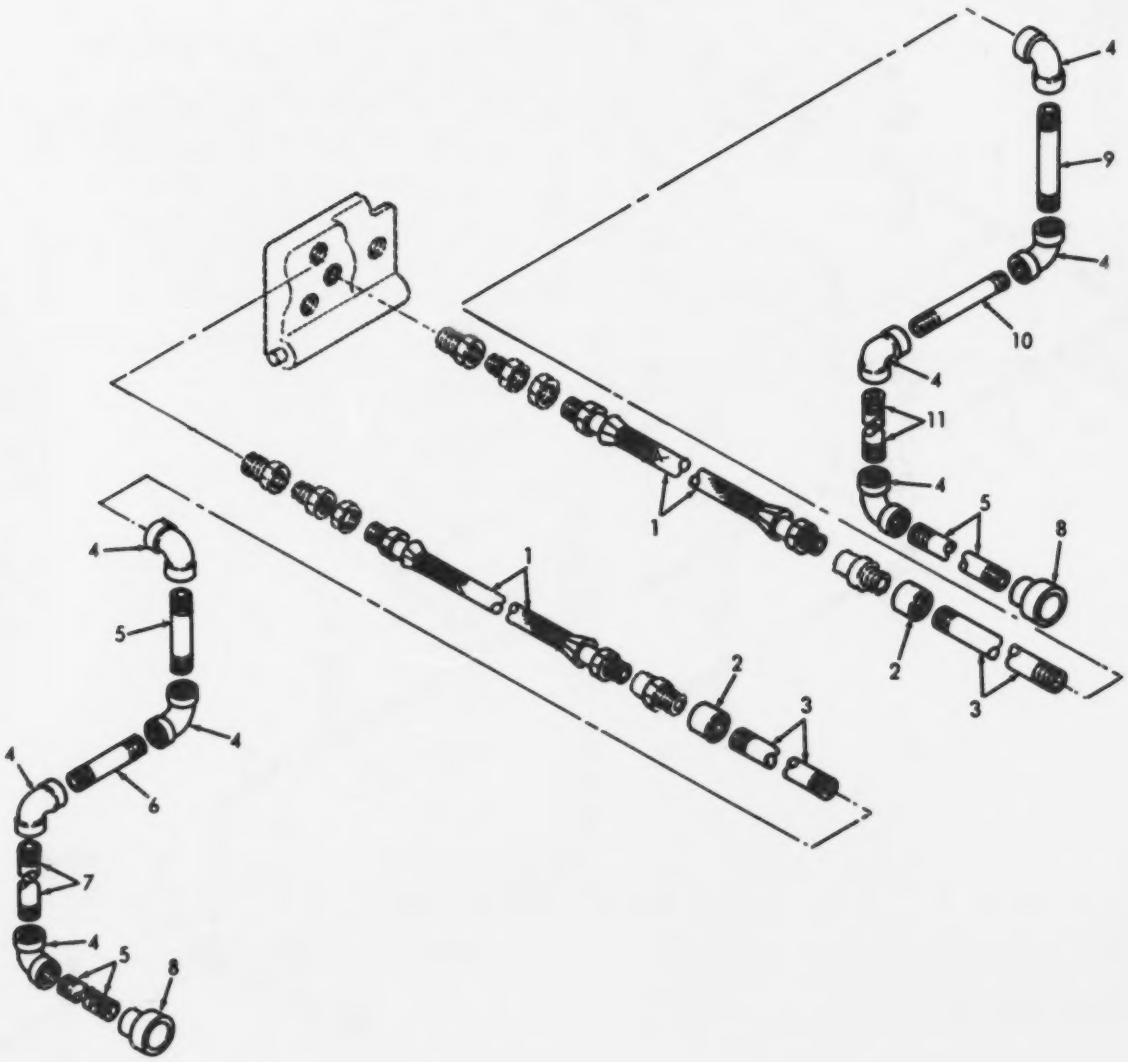

ME 1905-217-34P/121

Figure 121. Piping, Hydraulic Ramp Hoist

Figure 122. Piping, Hydraulic Ramp Hoist

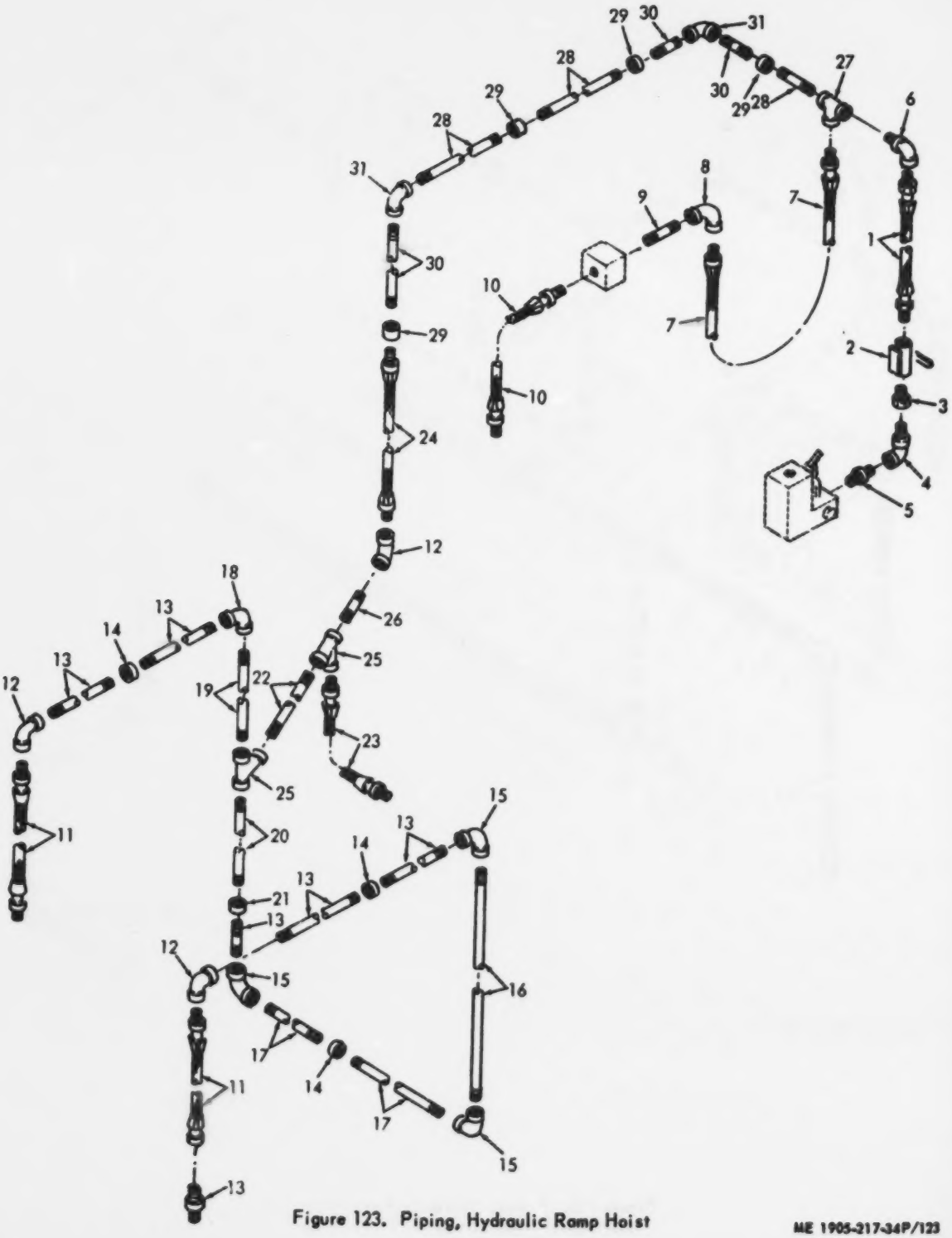

Figure 123. Piping, Hydraulic Ramp Hoist

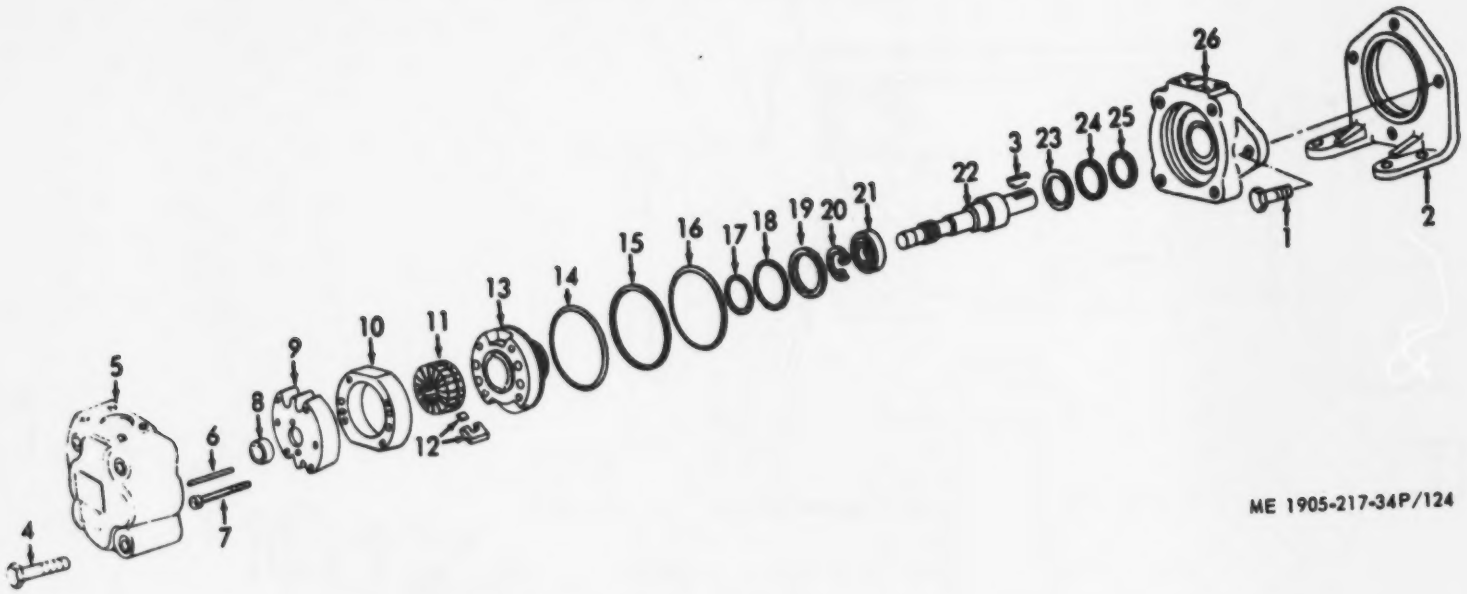

Figure 124. Pump, Hydraulic (Ramp)

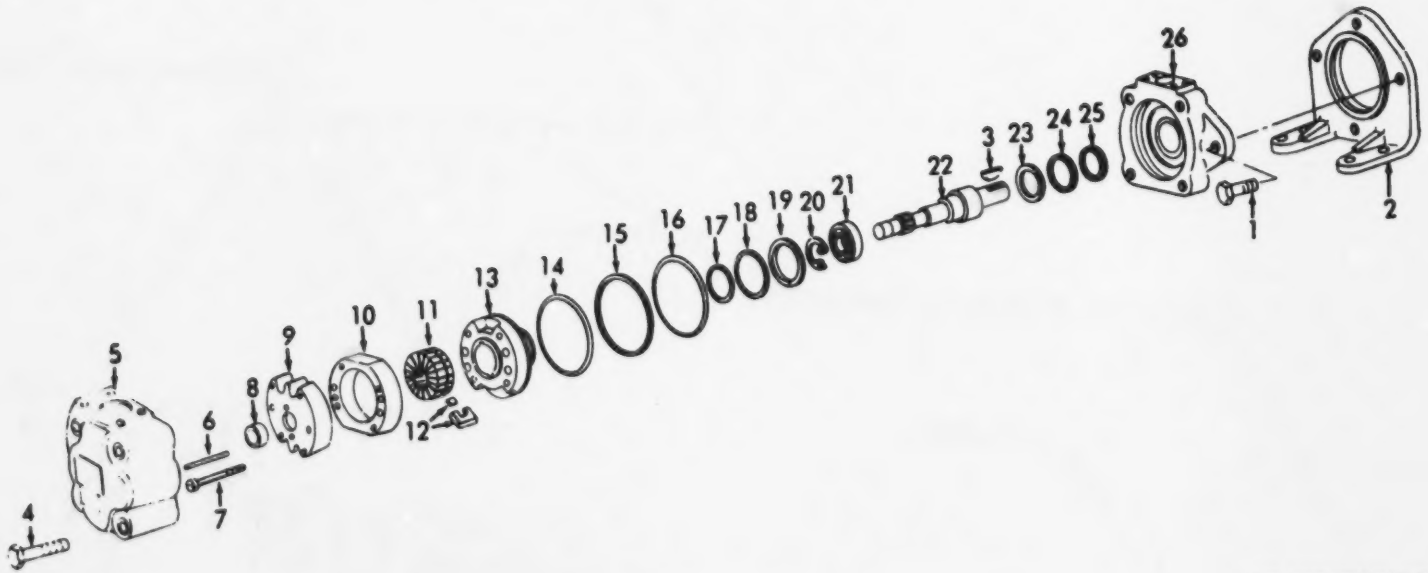

ME 1905-217-34P/125

Figure 125. Pump, Hydraulic (Ramp)

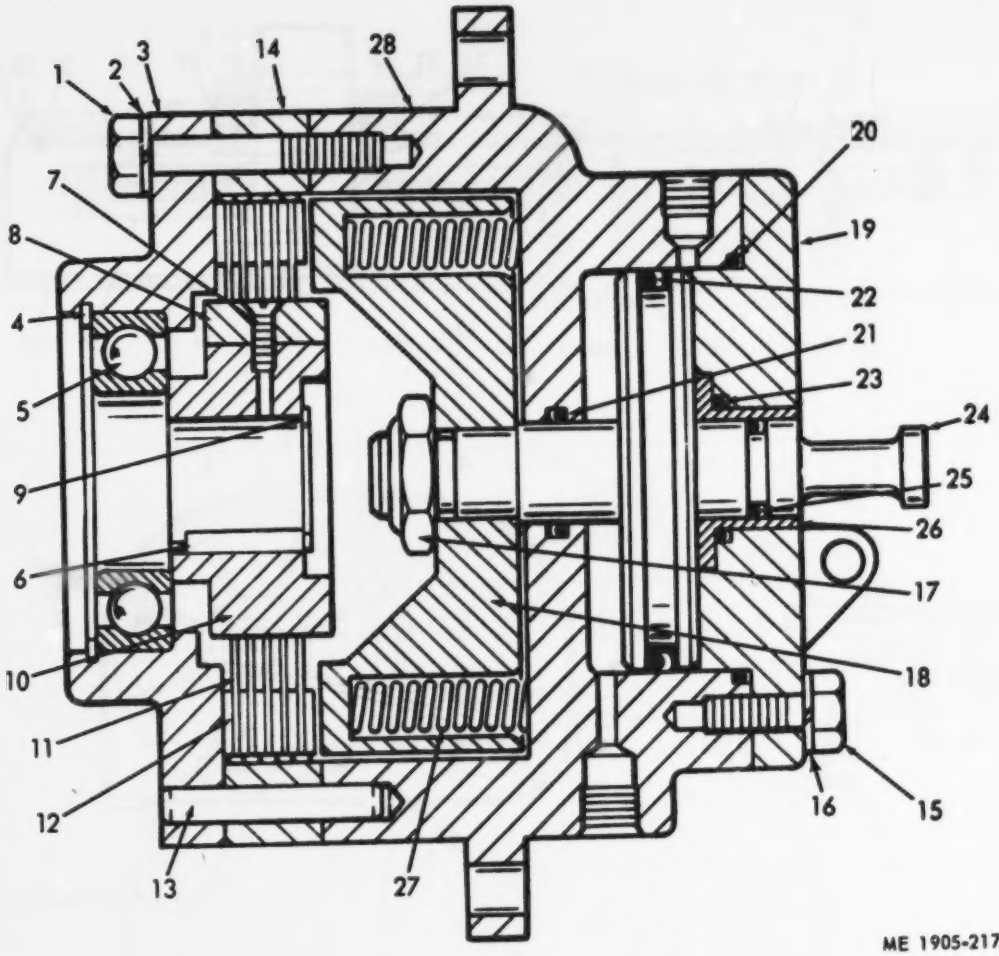

ME 1905-217-34P/126

Figure 126. Winch Brake

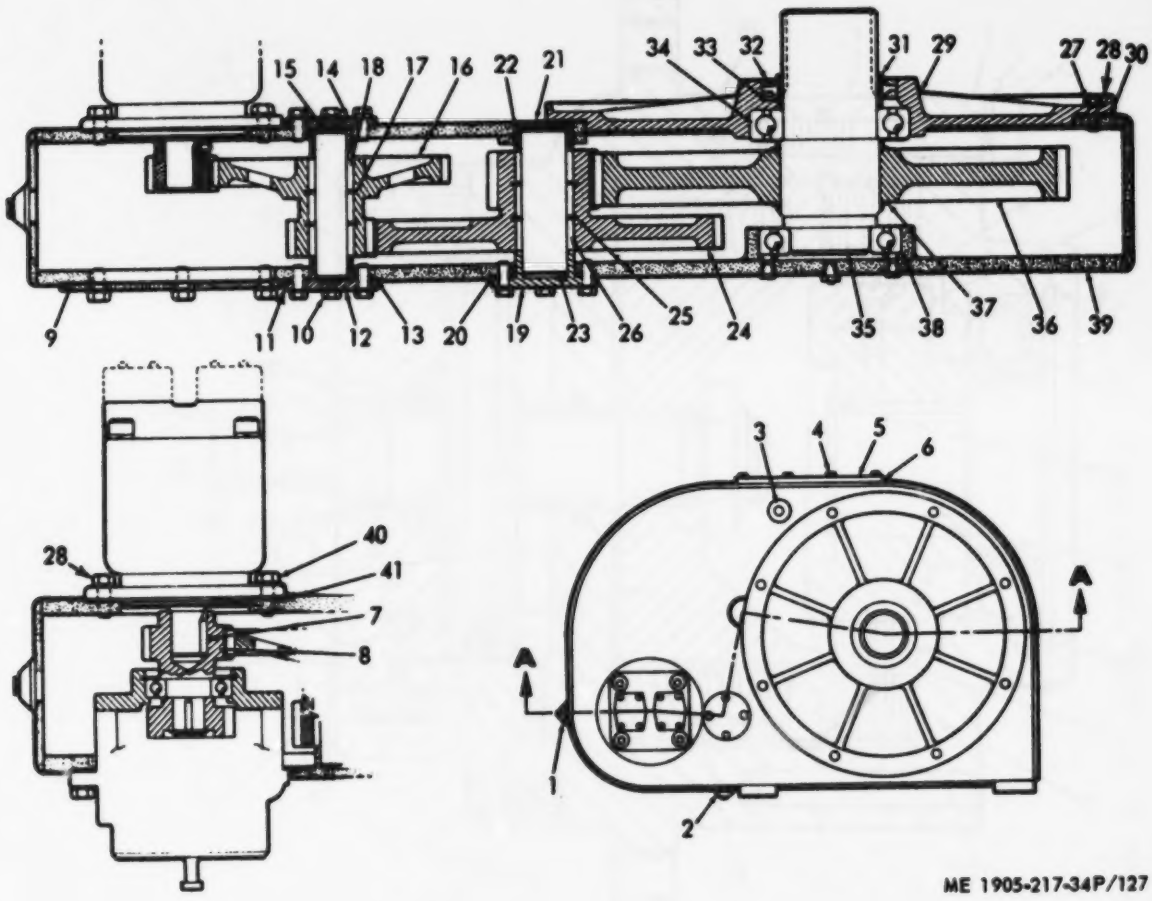

Figure 127. Winch Gear Reduction

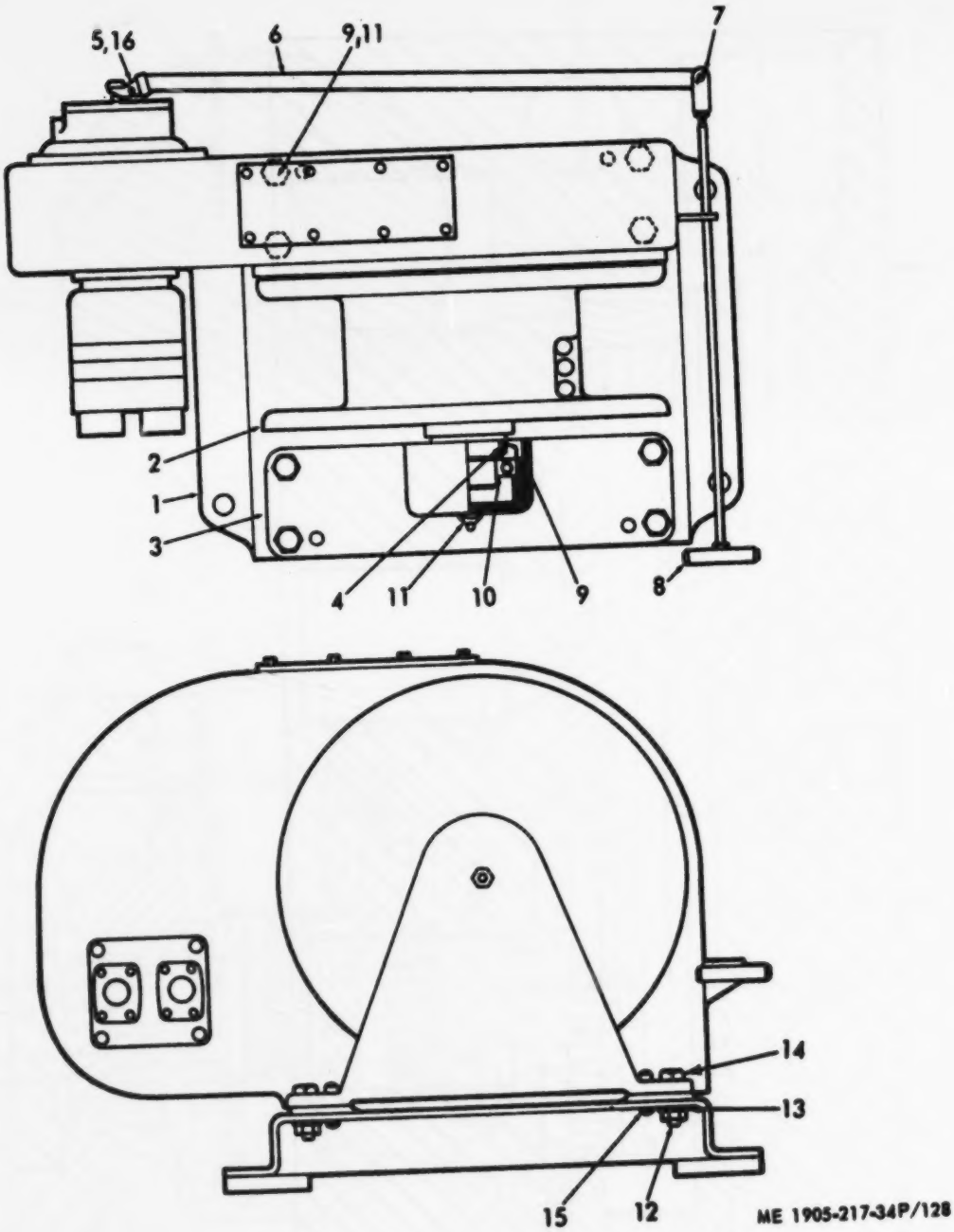

Figure 128. Winch Base

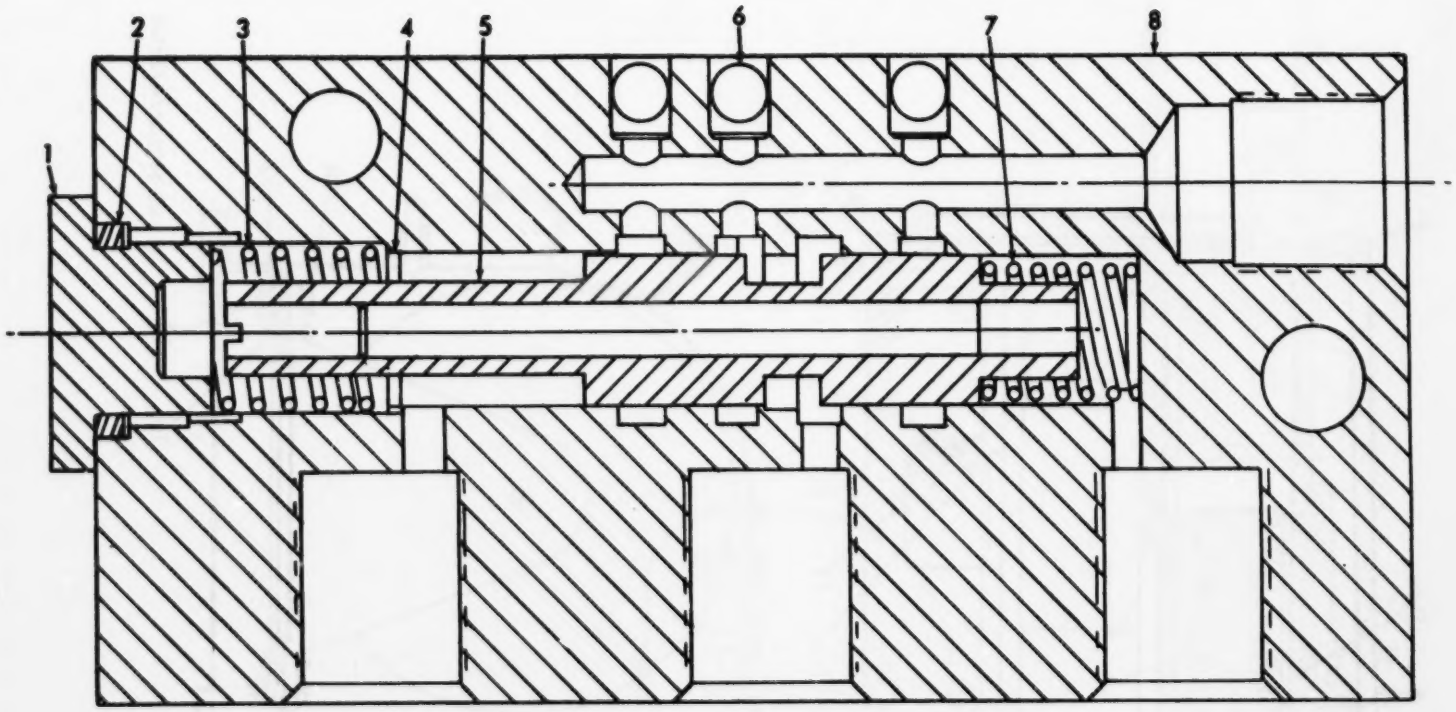

ME 1905-217-34P/129

Figure 129. Ramp Brake Valve

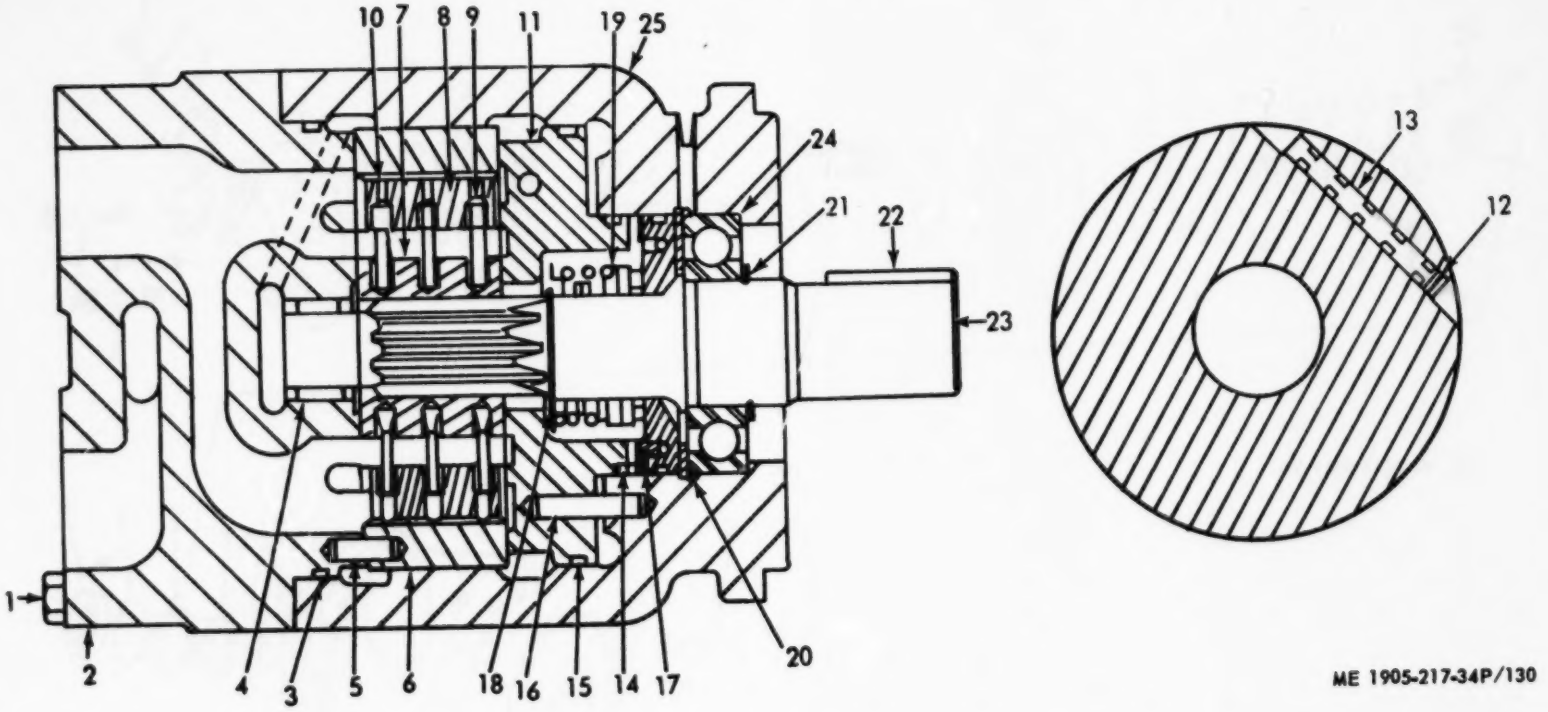

Figure 130. Ramp Hydraulic Motor

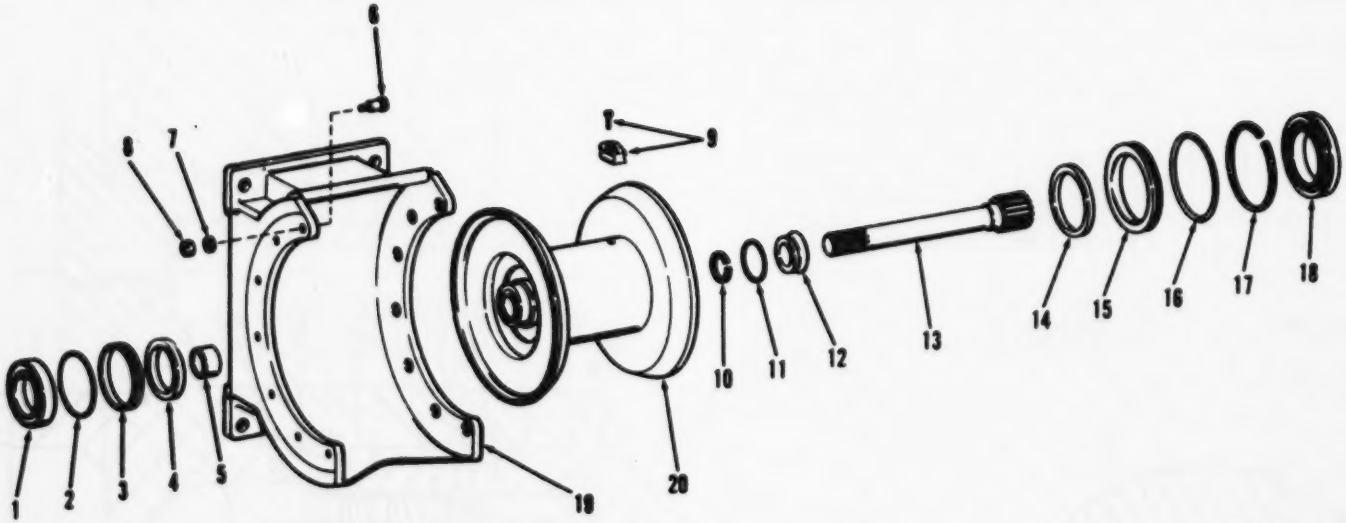

ME 1905-217-34P/131

Figure 131. Drum and Winch Base

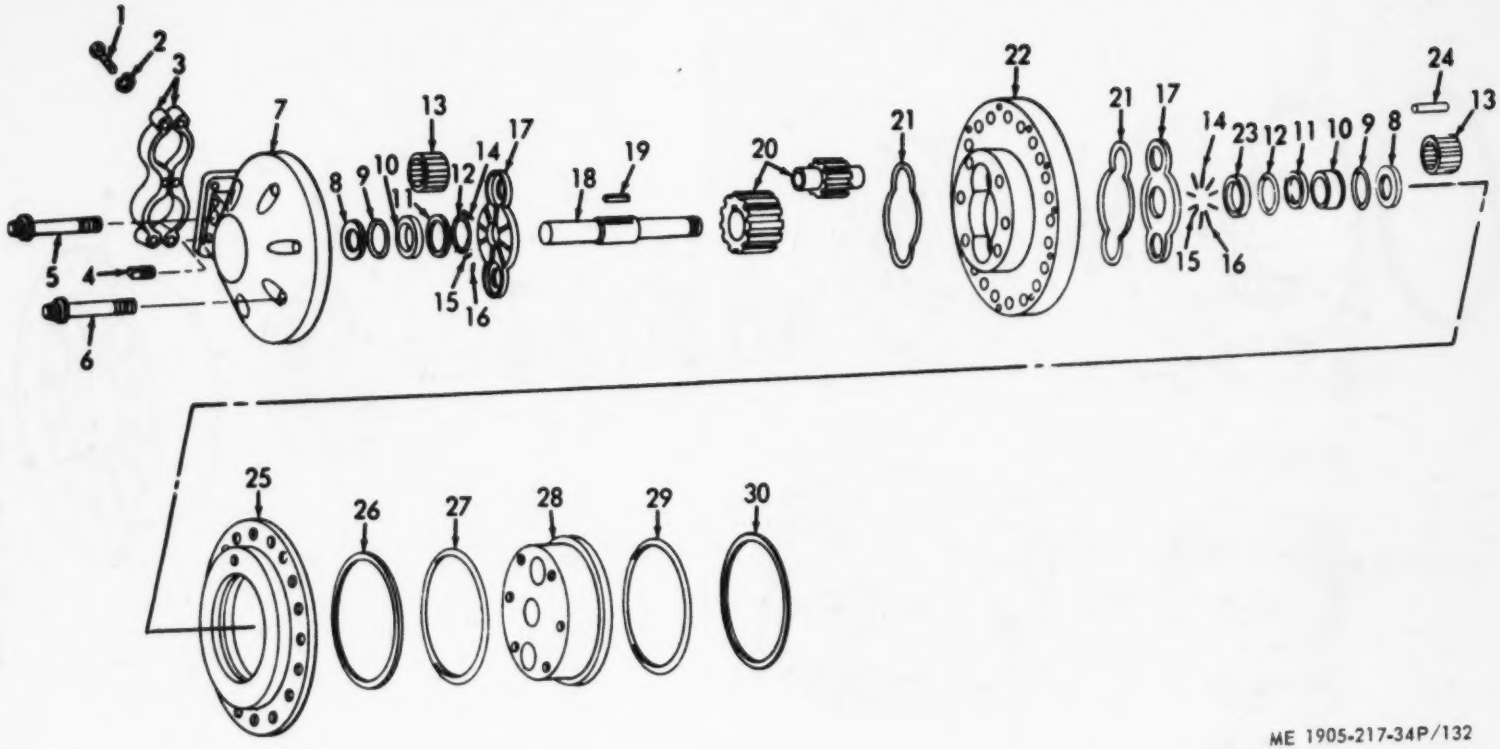

ME 1905-217-34P/132

Figure 132. Hydraulic Motor

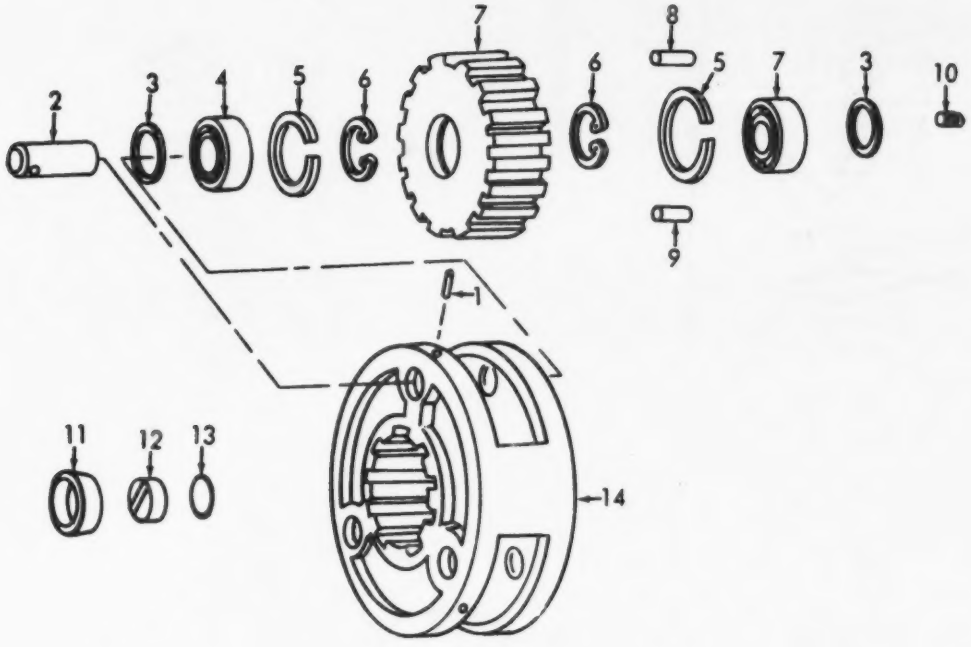

ME 1905-217-34P/133

Figure 133. Final Planet

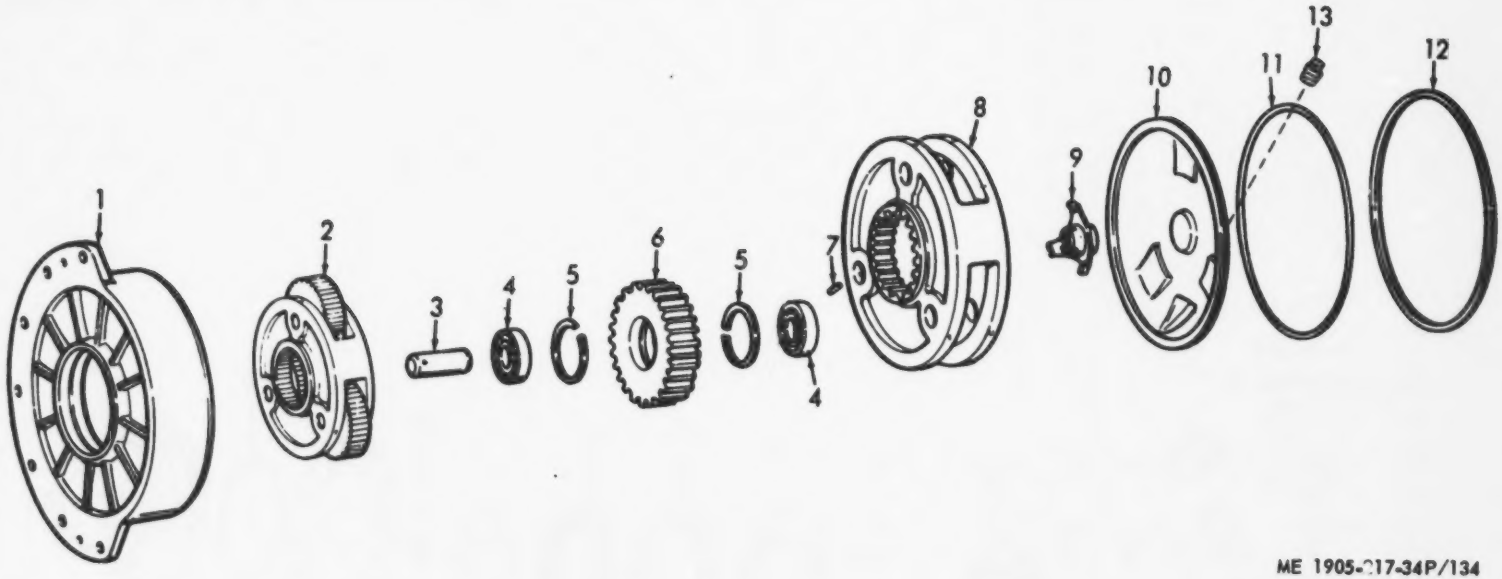

ME 1905-217-34P/134

Figure 134. Final Drive

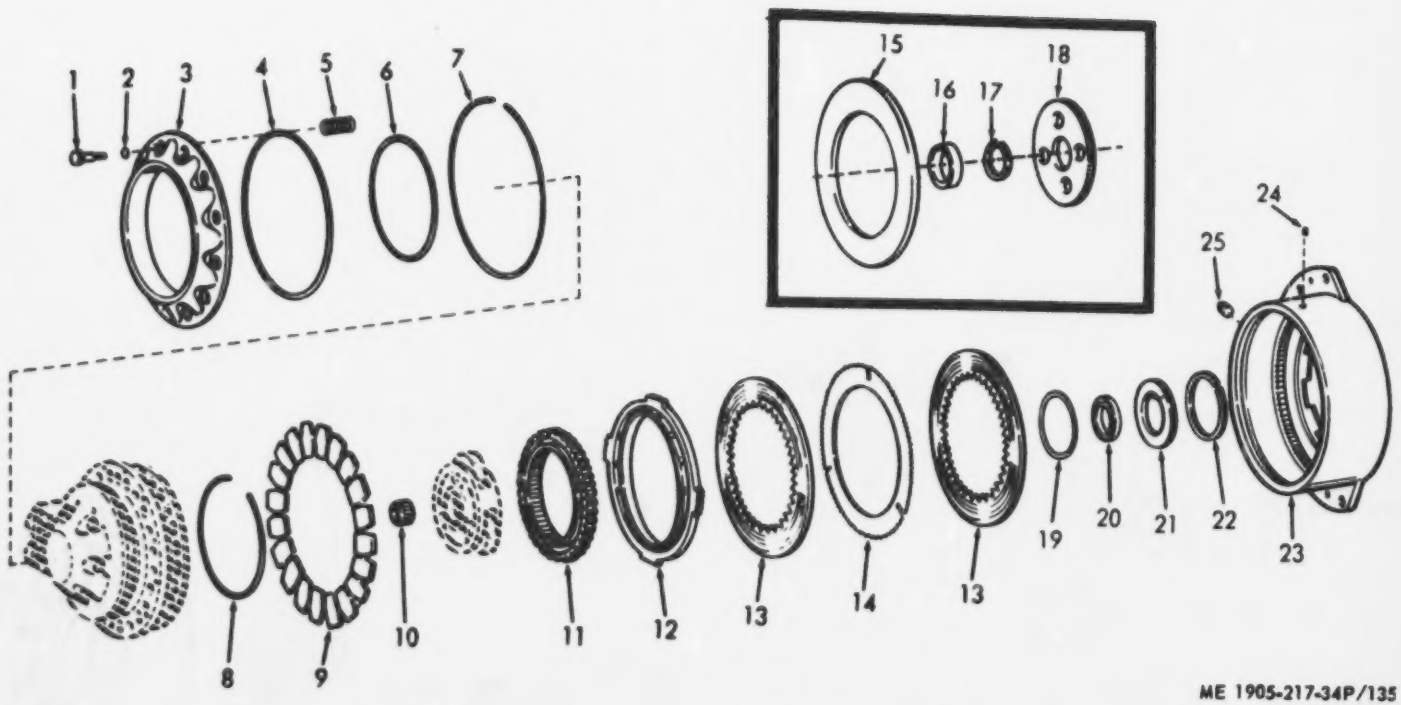

Figure 135. Primary Drive

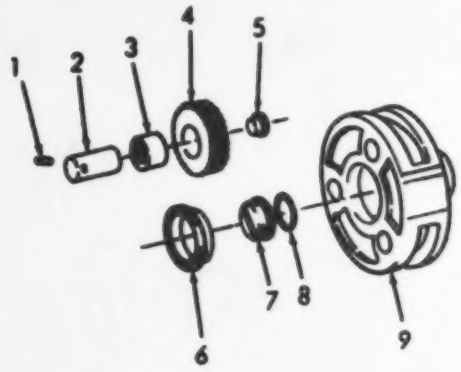

ME 1905-217-34P/136

Figure 136. Primary Planet

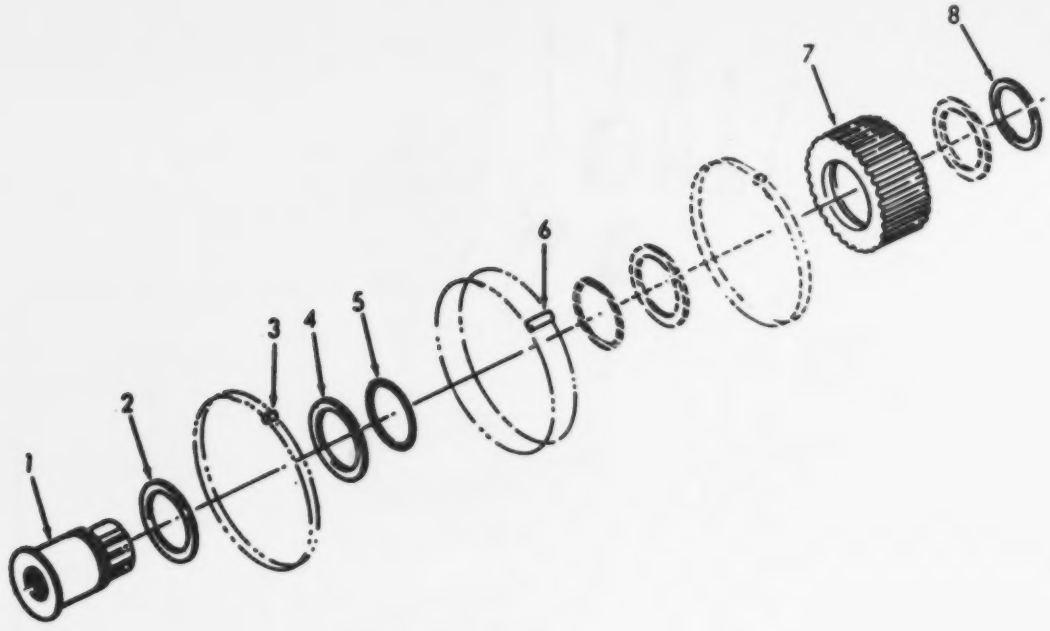

ME 1905-217-34P/137

Figure 137. Brake Hub

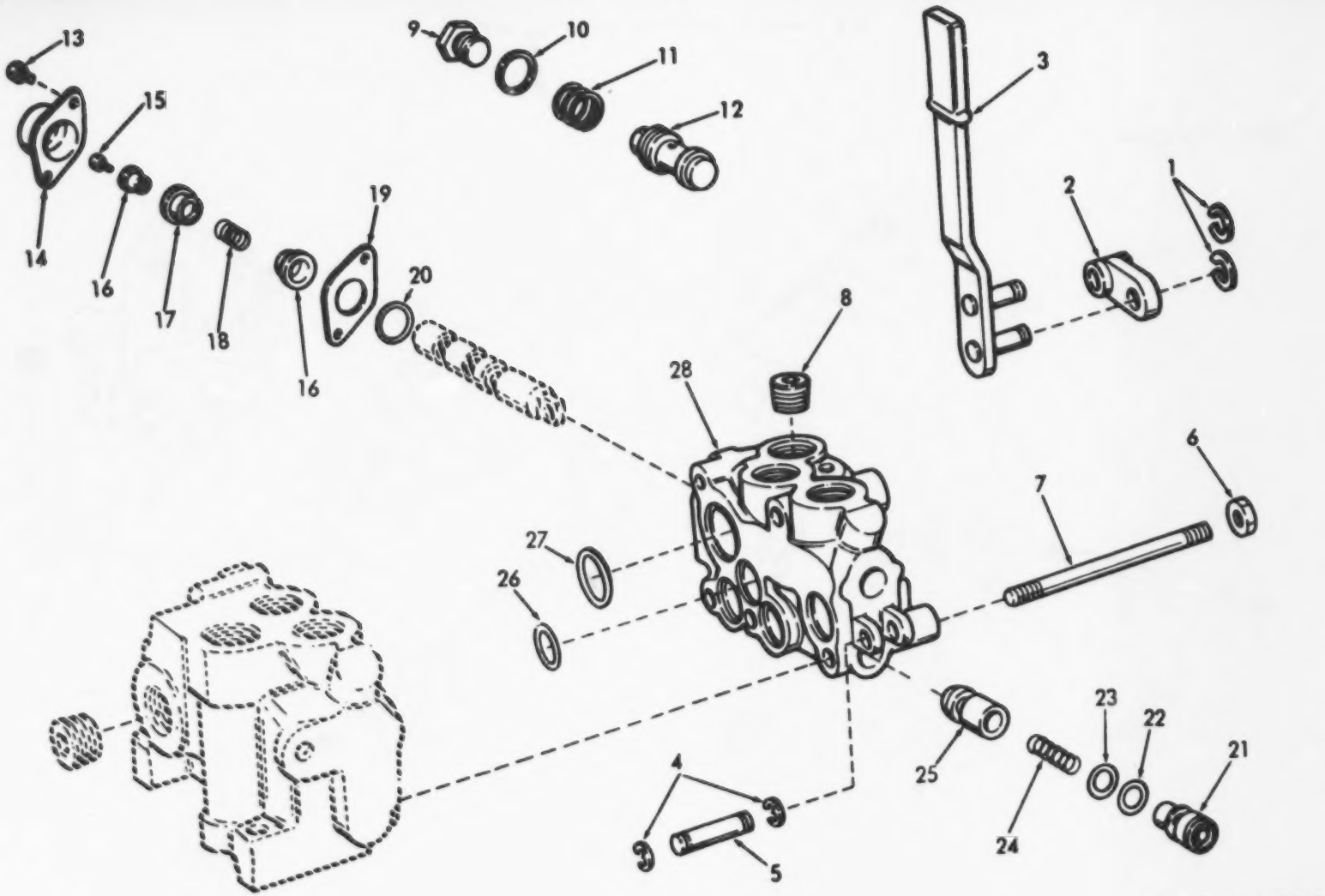

Figure 138. Valve Ramp Control

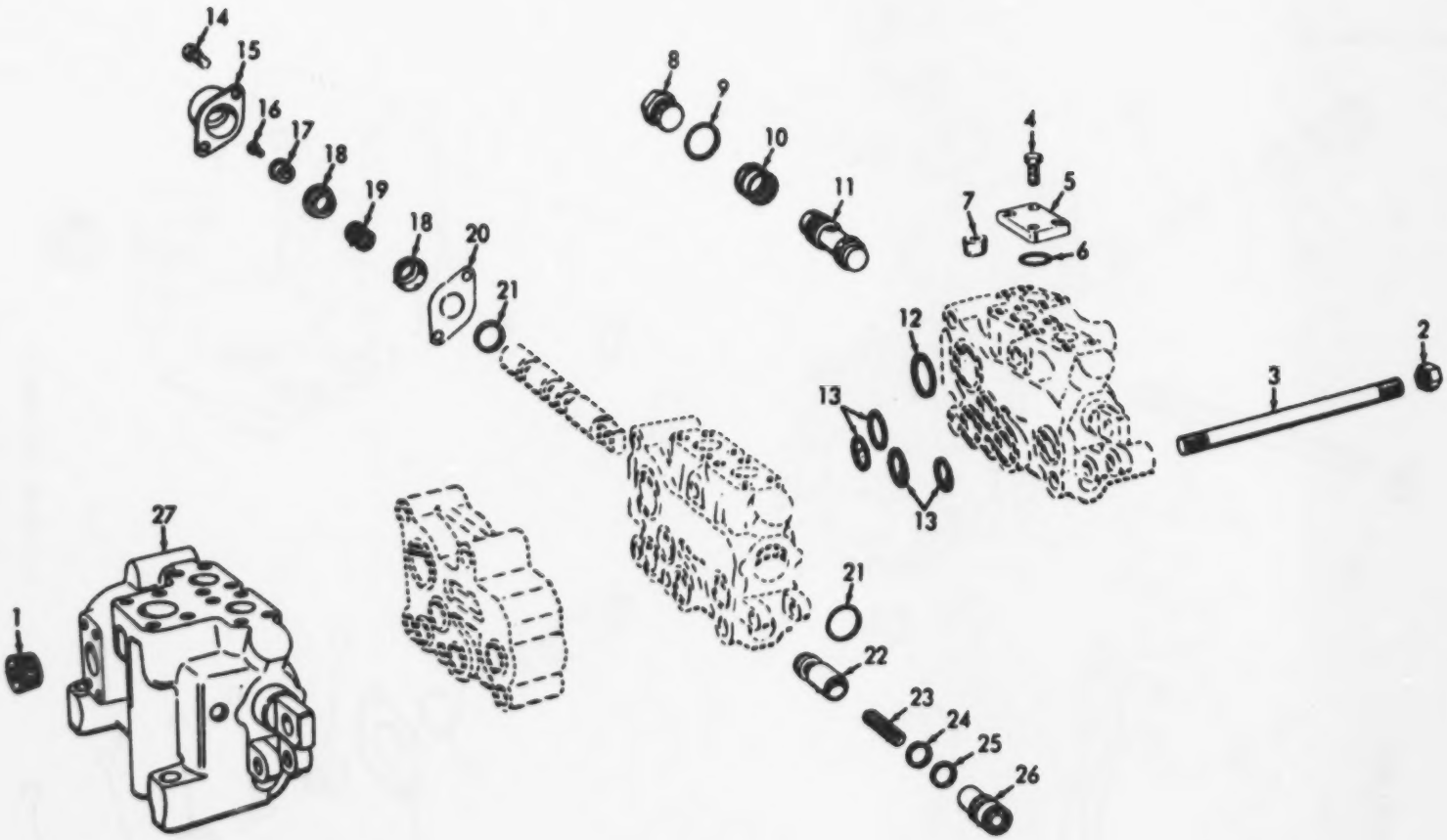

Figure 139. Valve Ramp Control (Sheet 1 of 2)

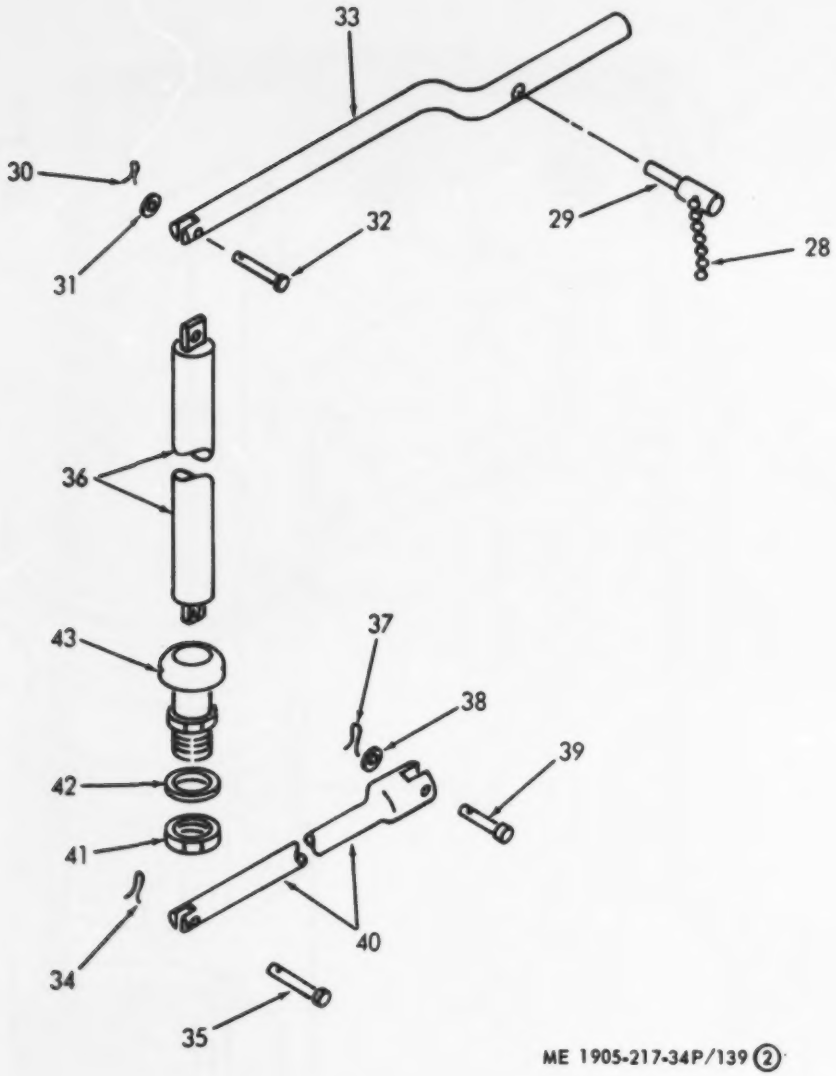

Figure 139. Valve Ramp Control (Sheet 2 of 2)

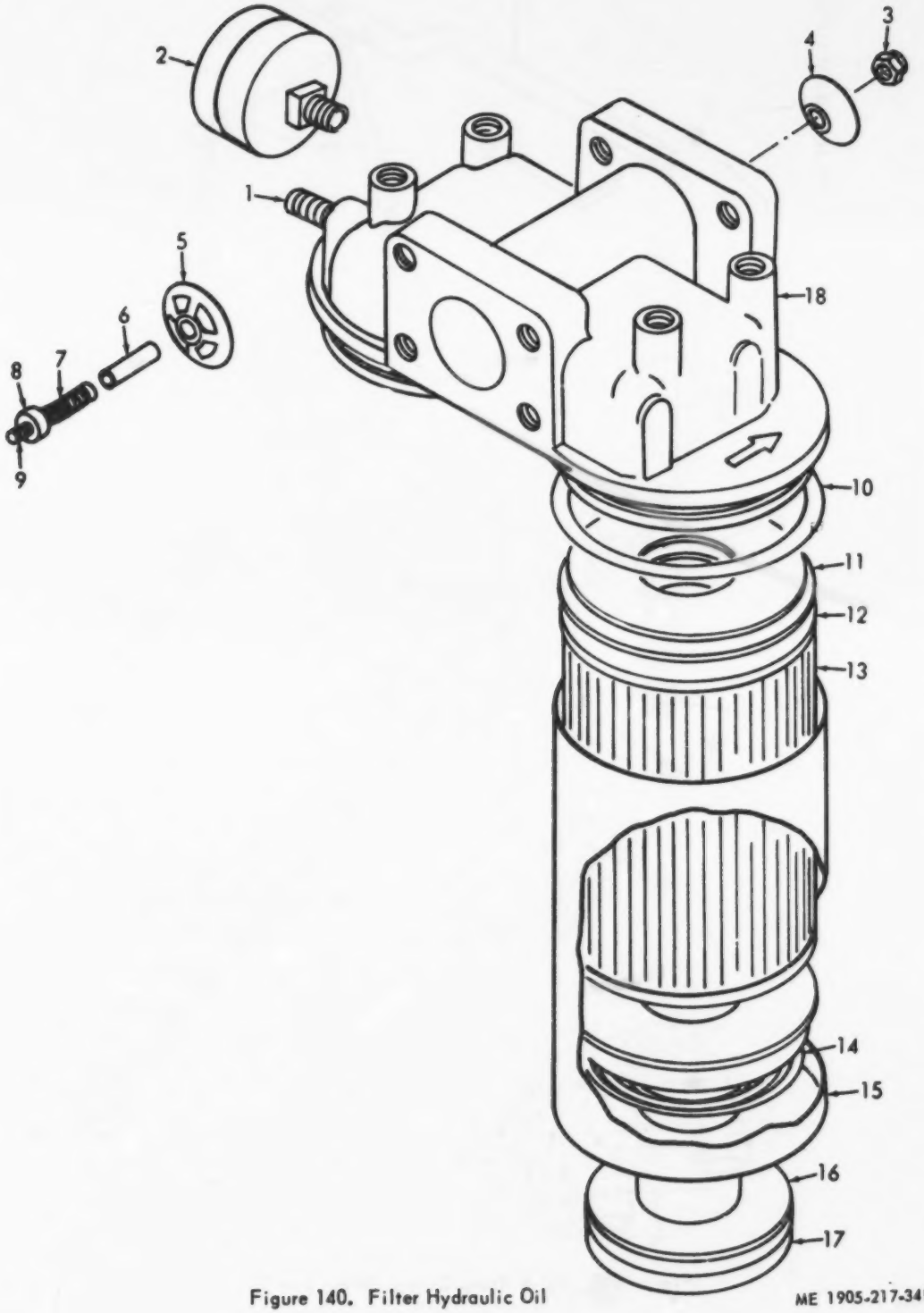

Figure 140. Filter Hydraulic Oil

ME 1905-217-34P/140

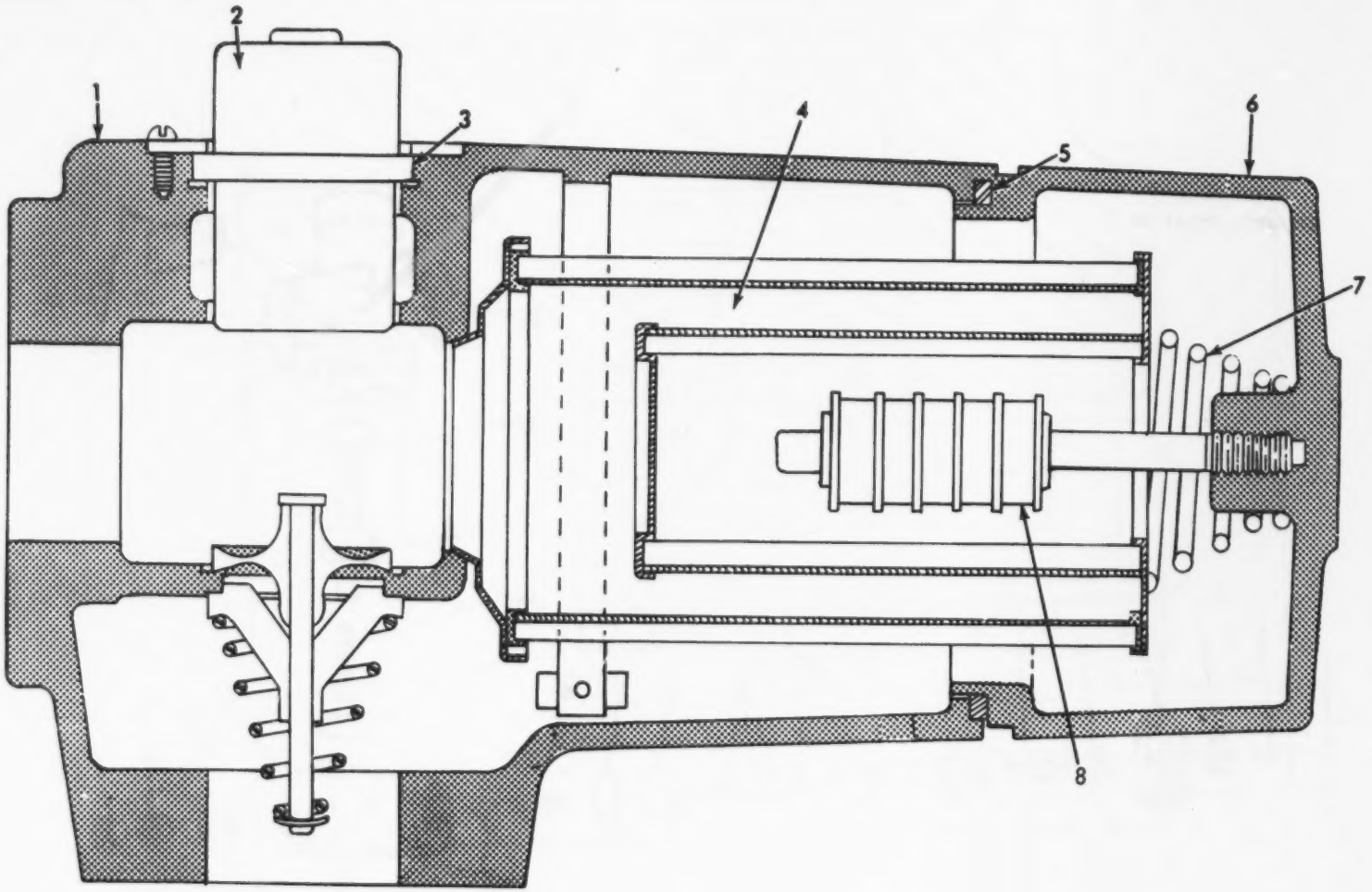

ME 1905-217-34P/141

Figure 141. Strainer Hydraulic Oil

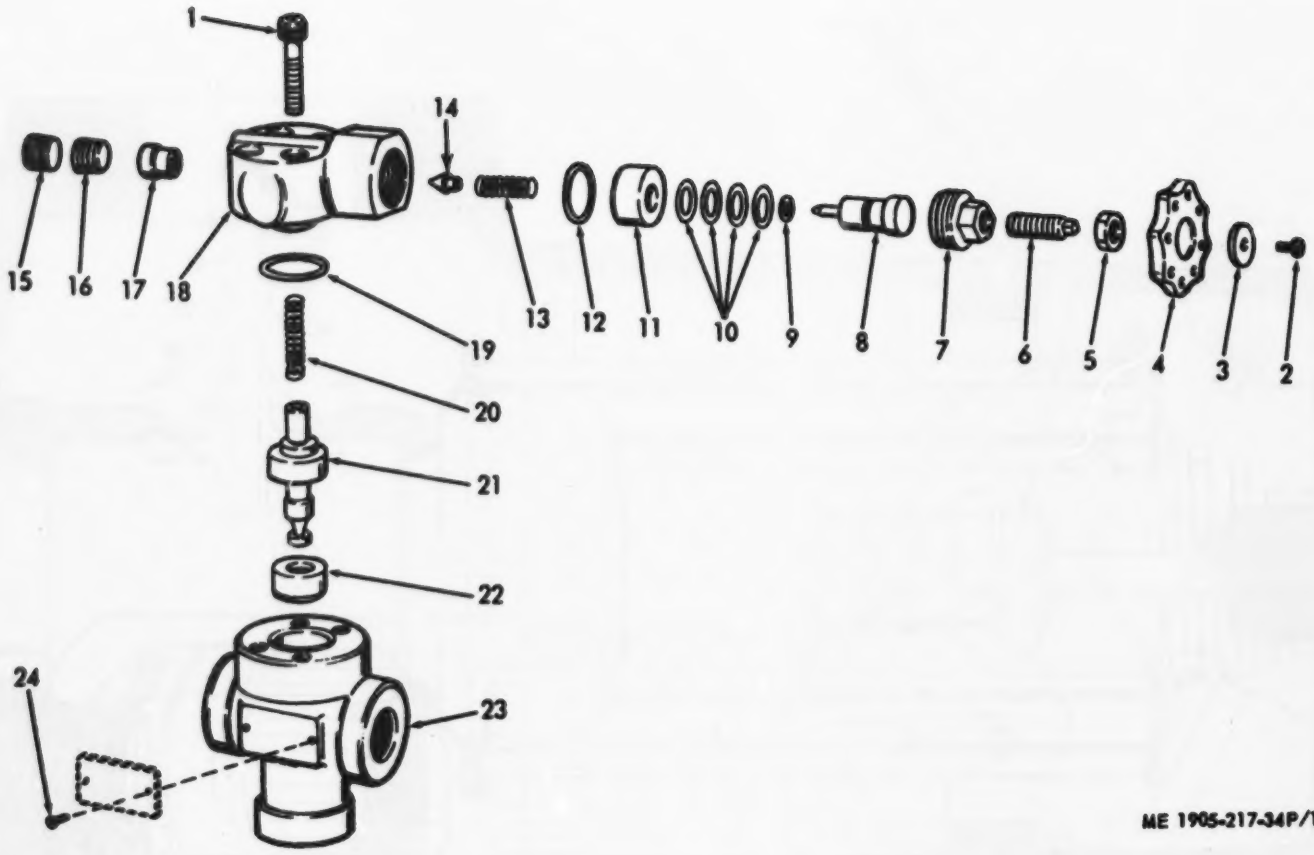

Figure 142. Relief Valve

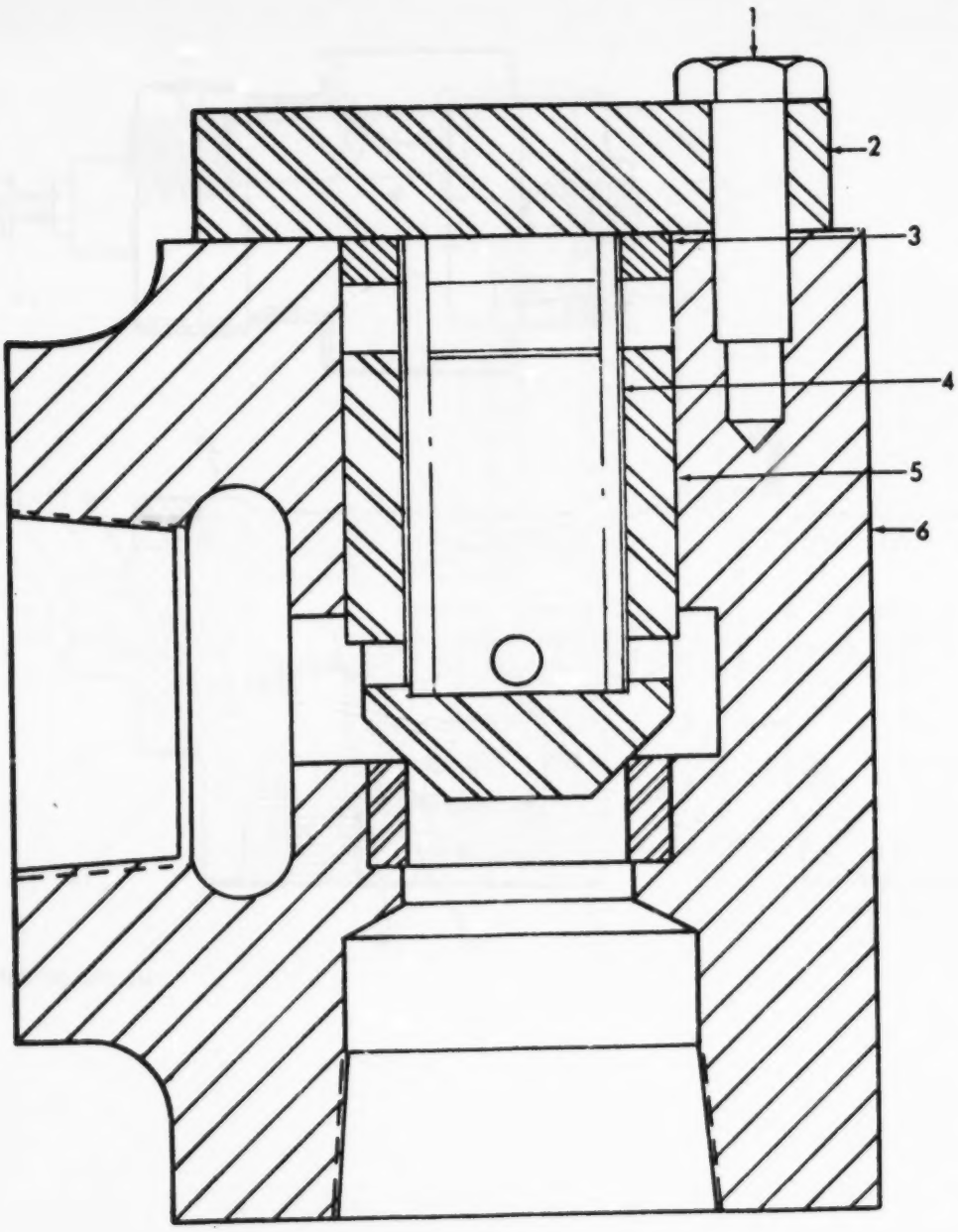

ME 1905-217-34P/143

Figure 143. Check Valve

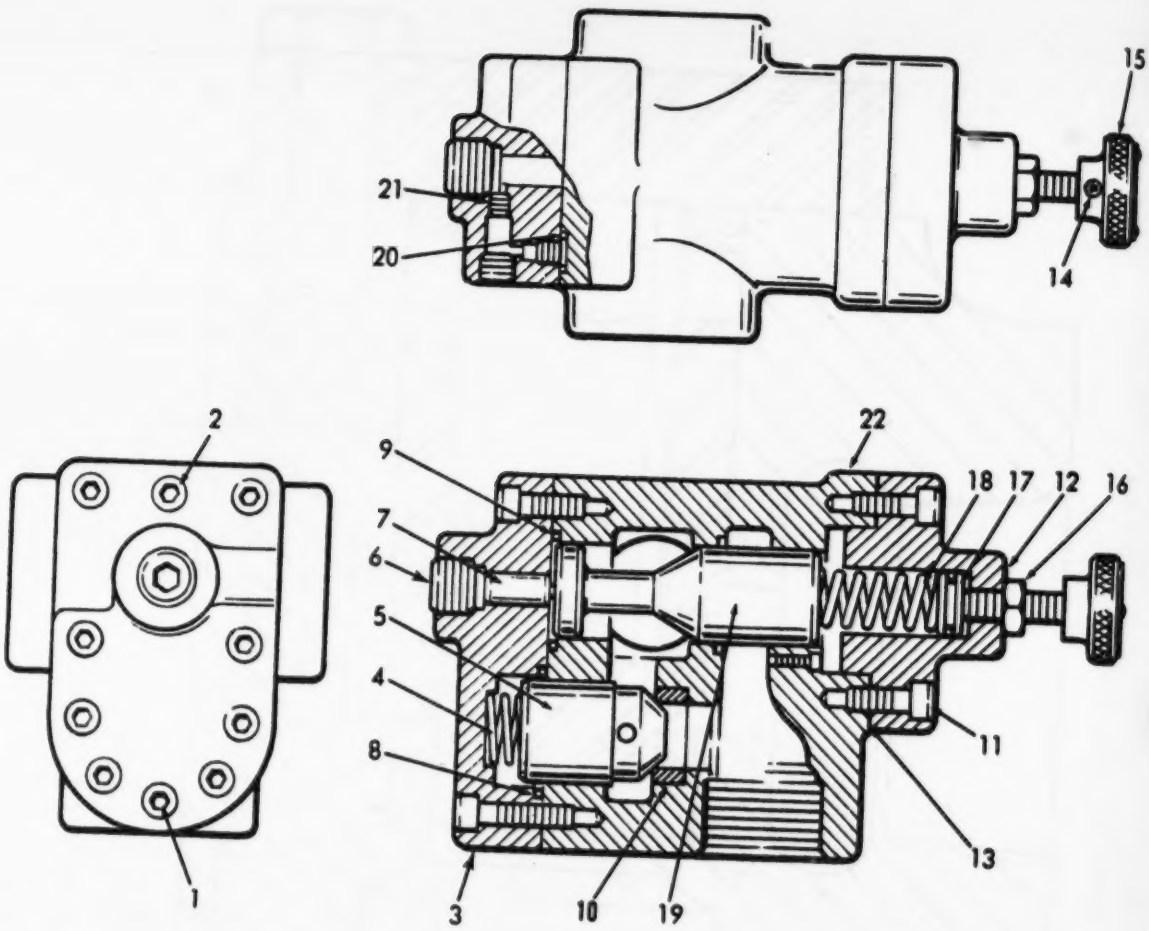

Figure 144. Counterbalance Valve

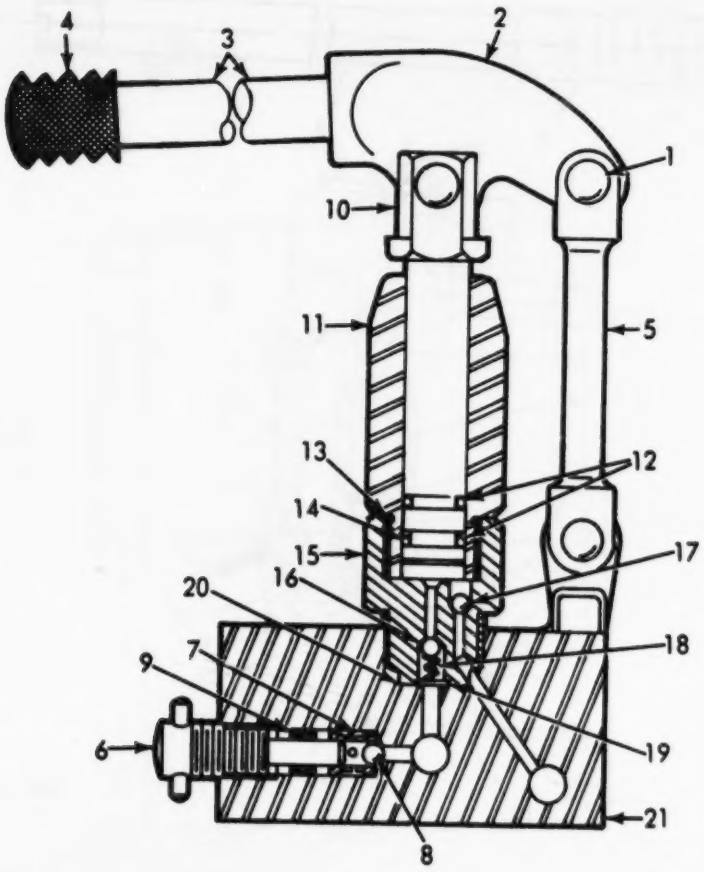

ME 1905-217-34P/145

Figure 145. Hand Pump Hydraulic

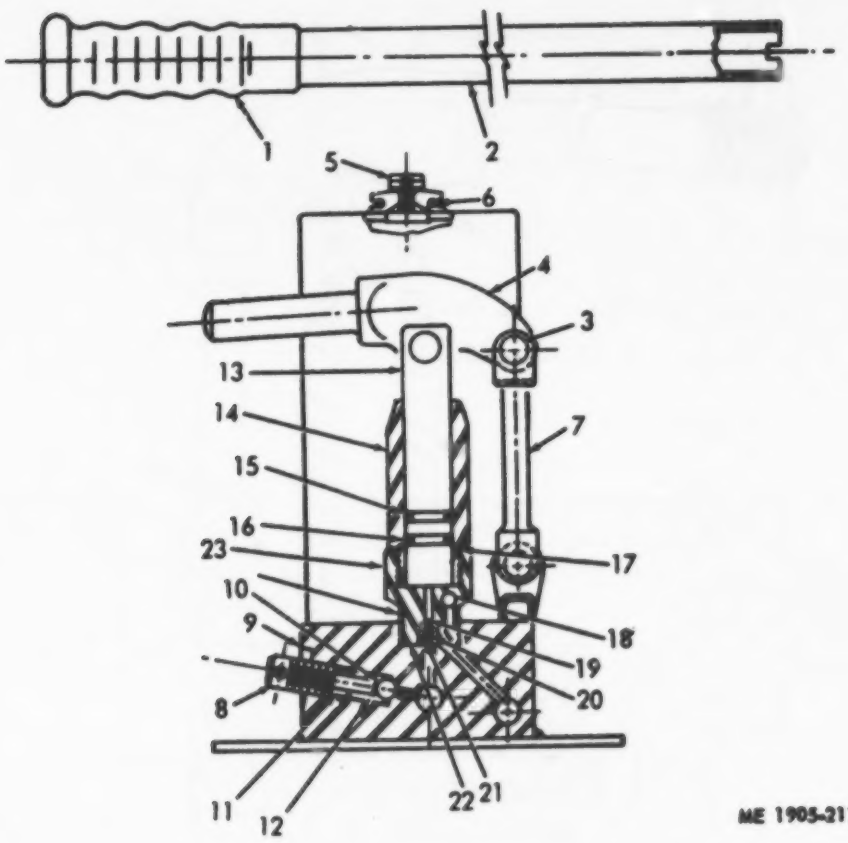

ME 1905-217-34P/146

Figure 146. Hand Pump Hydraulic

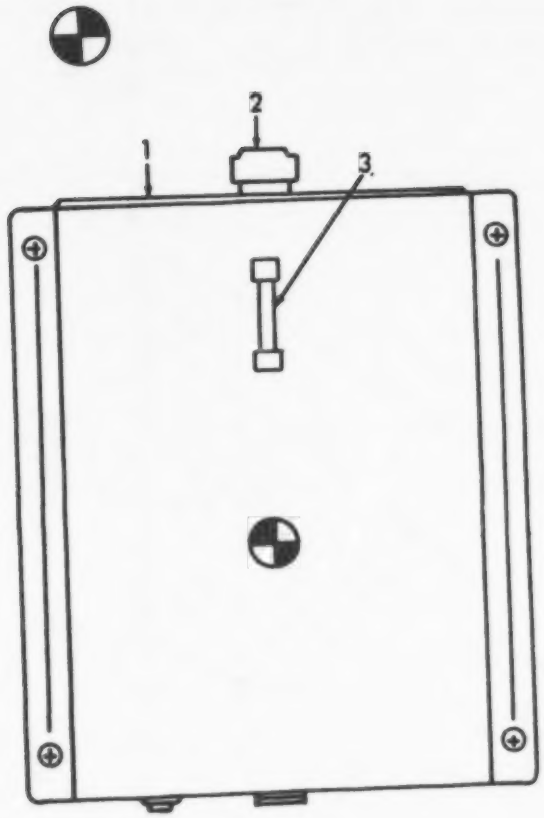

ME 1905-217-34P/147

Figure 147. Tanks, Hydraulic Oil Winch

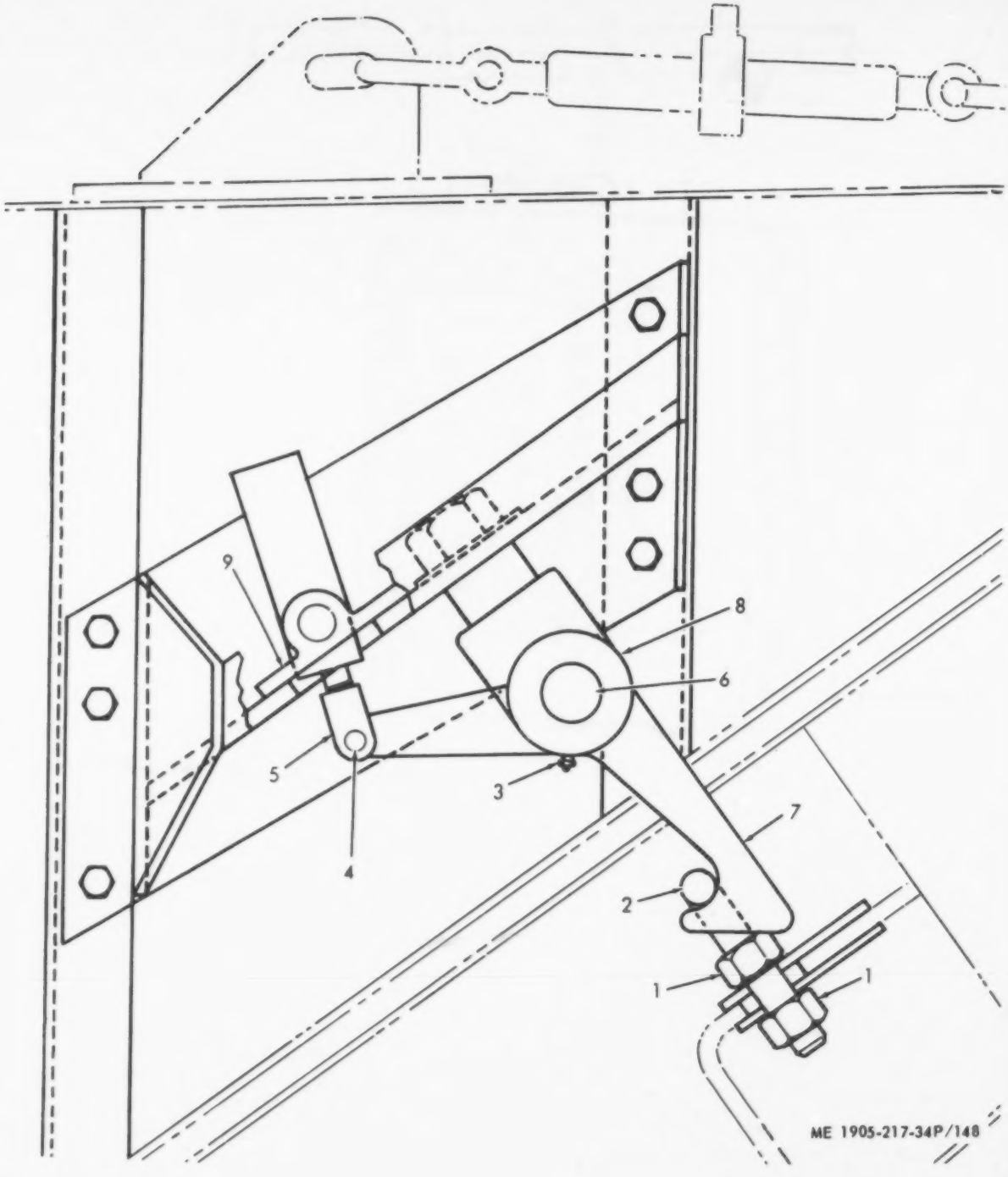

Figure 148. Ramp Latches

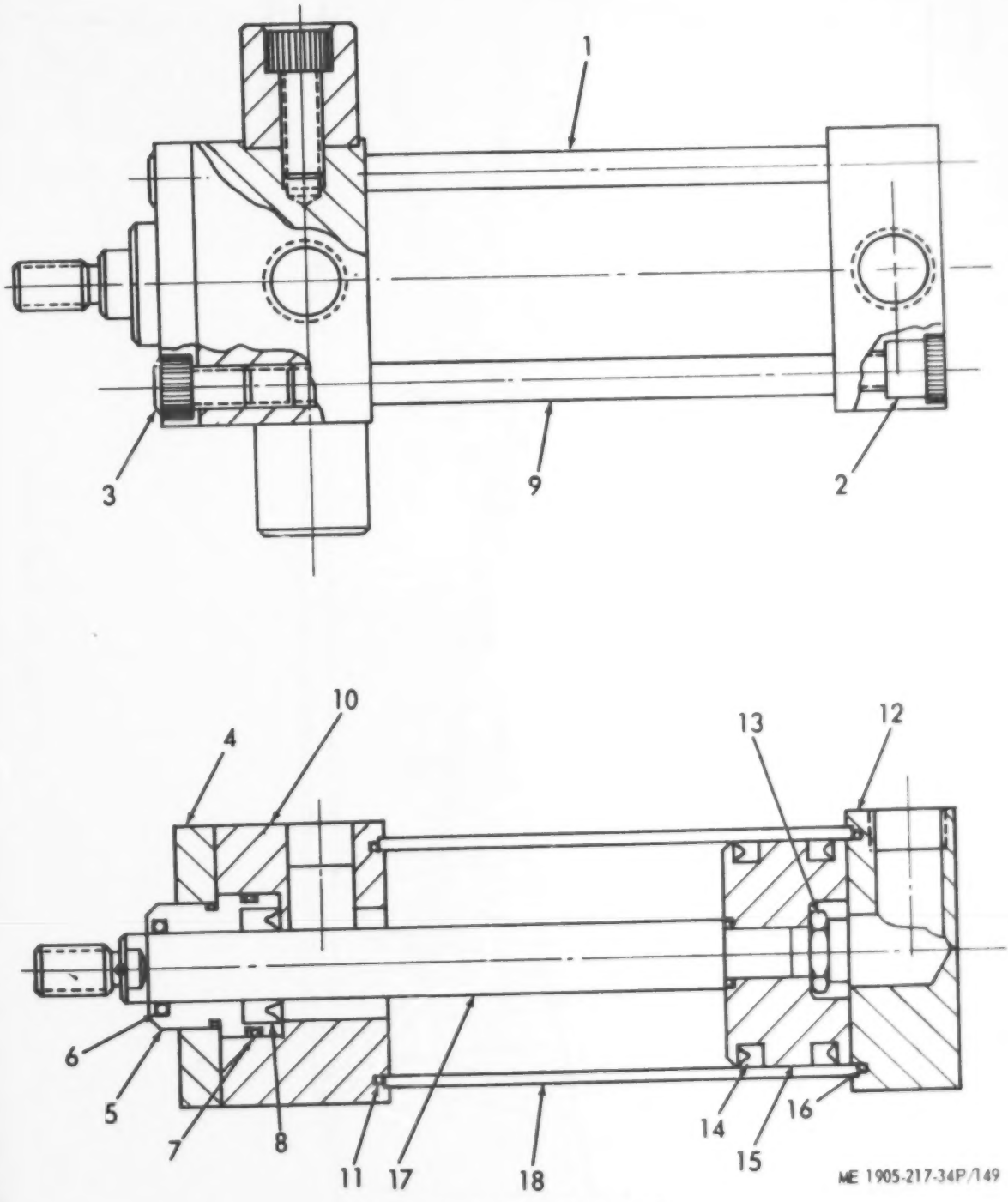

Figure 149. Cylinders, Ramp Latches

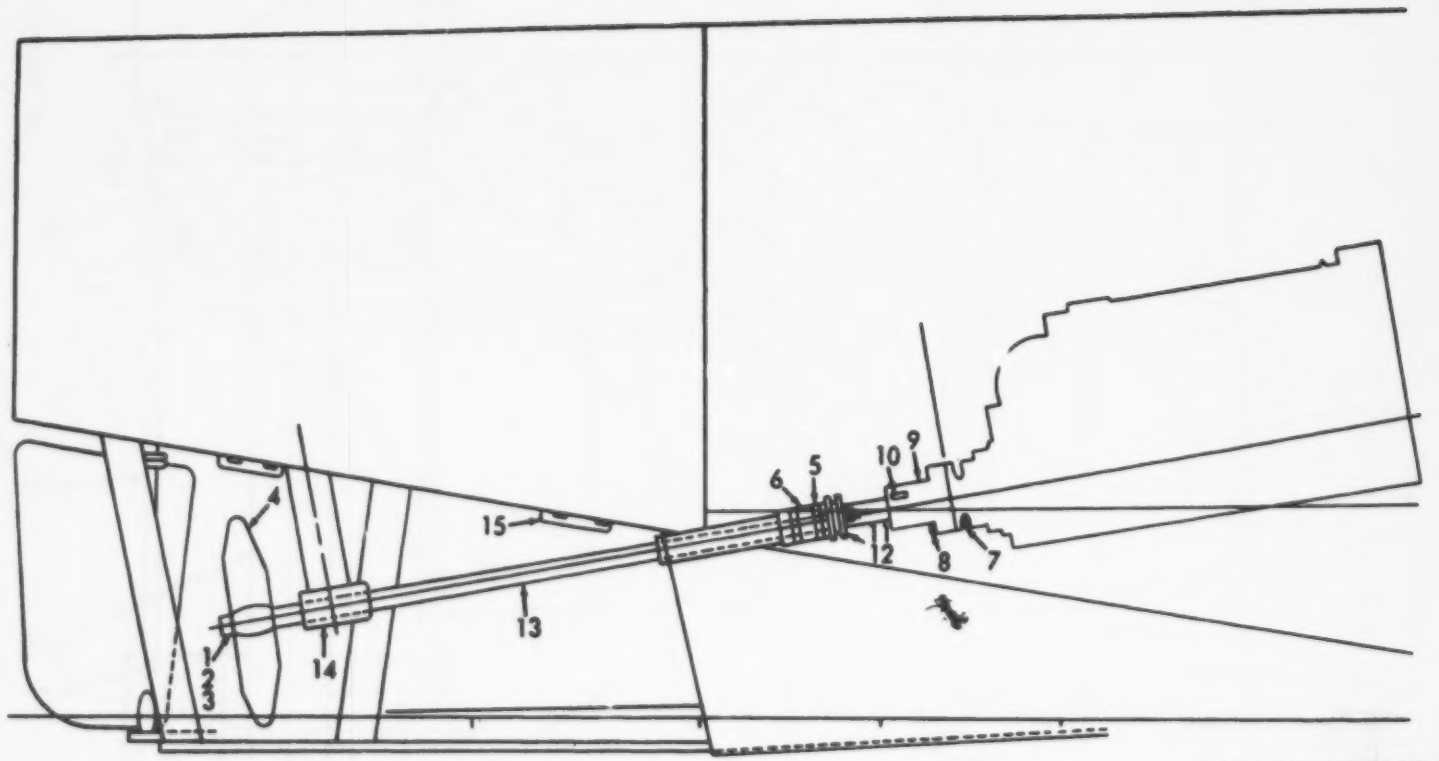

Figure 150. Propeller Shaft

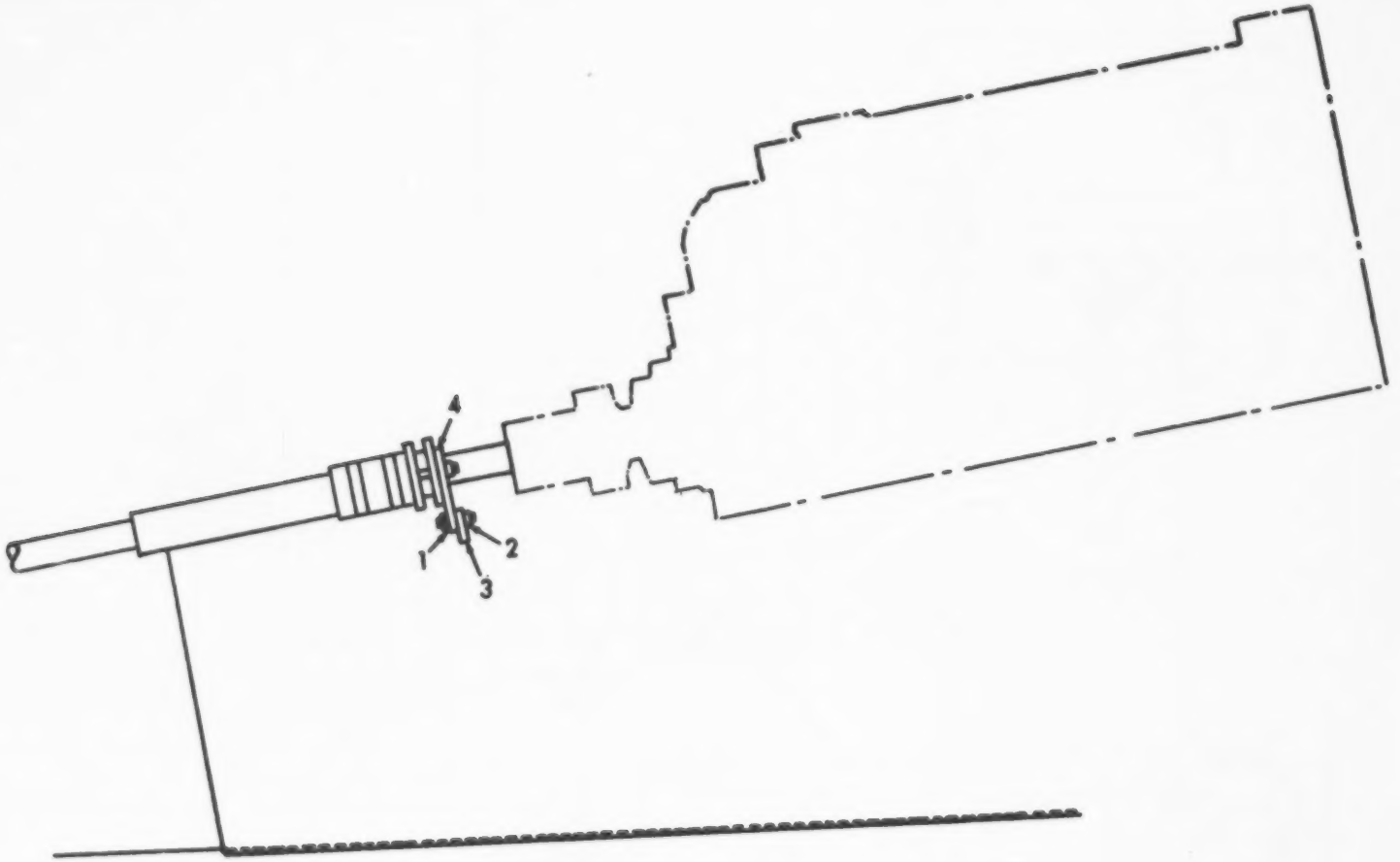

Figure 151. Stuffing Box and Brace

ME 1905-217-34P/151

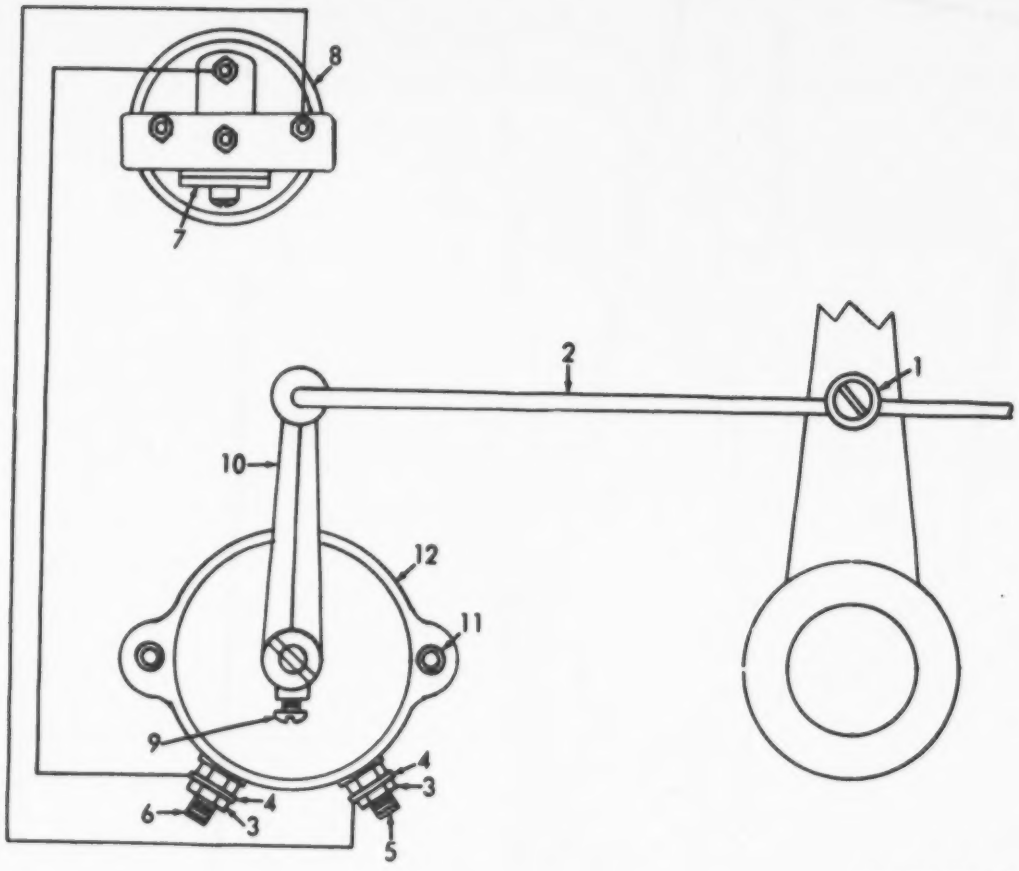

ME 1905-217-34P/152

Figure 152. Indicator, Rudder Angle and Transmitter

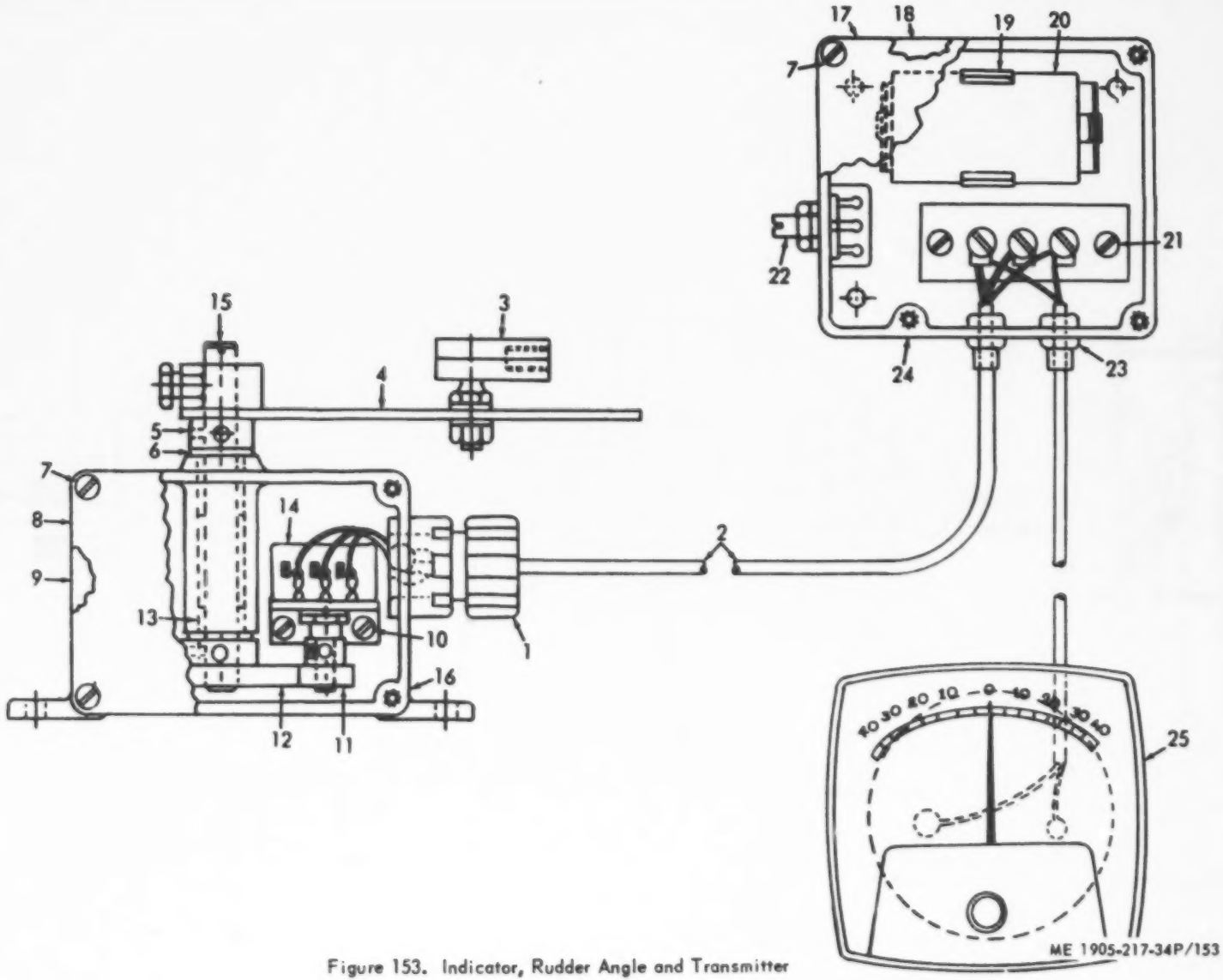

Figure 153. Indicator, Rudder Angle and Transmitter

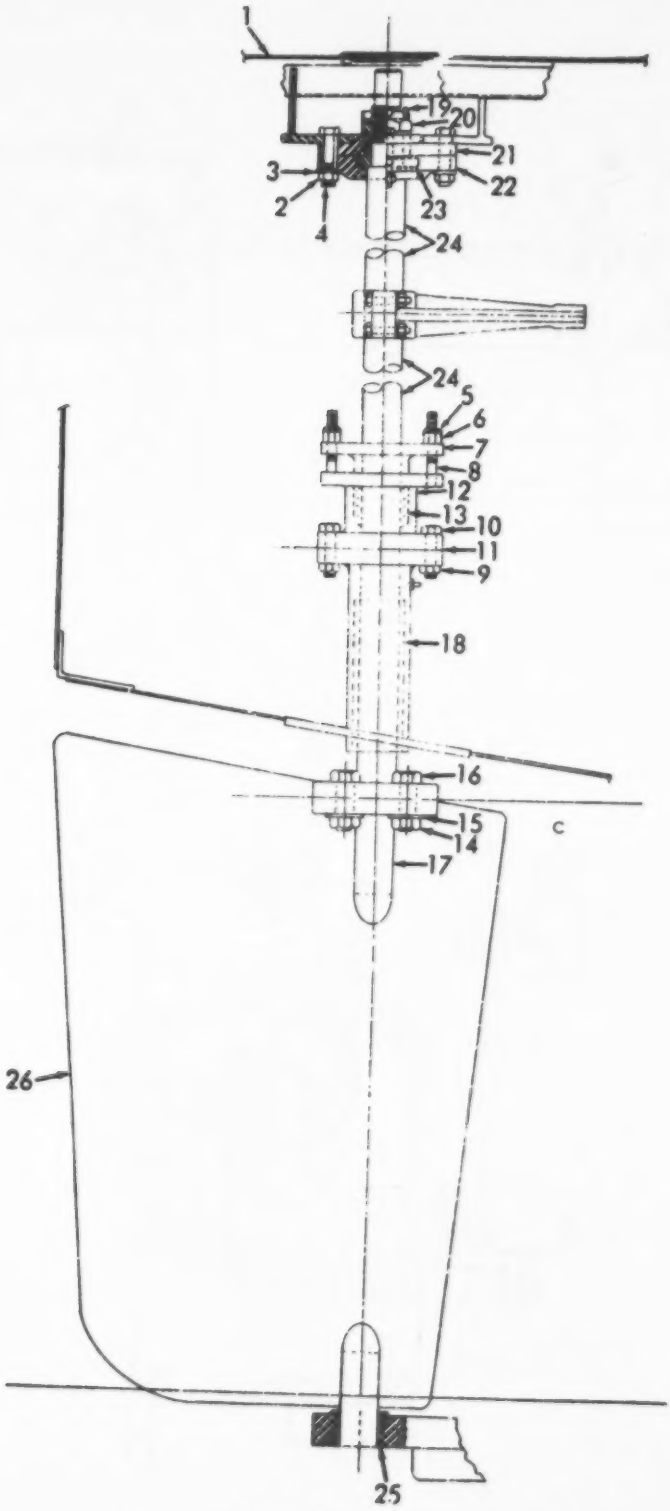

Figure 154. Rudder and Tiller

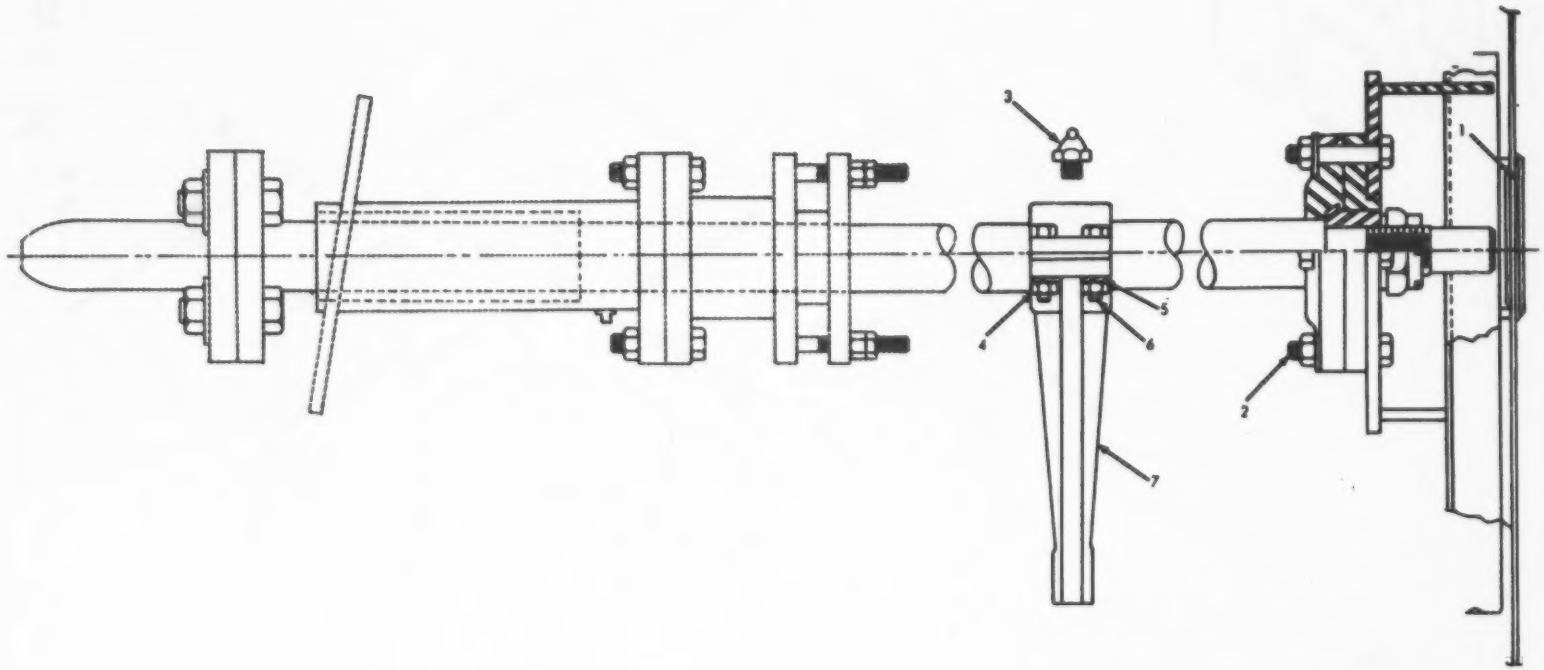

Figure 155. Rudder and Tiller

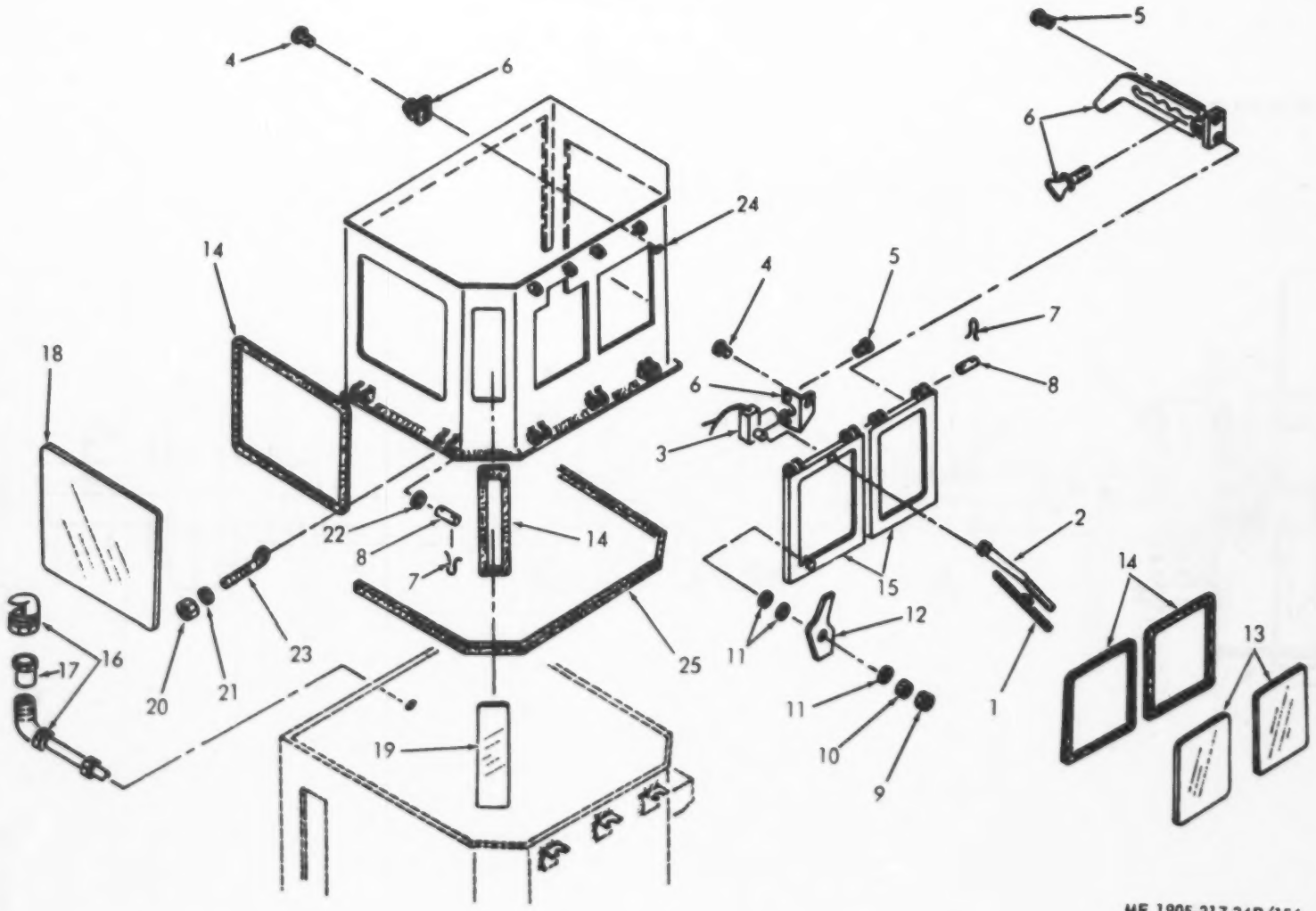

Figure 156. Pilot House Canopy

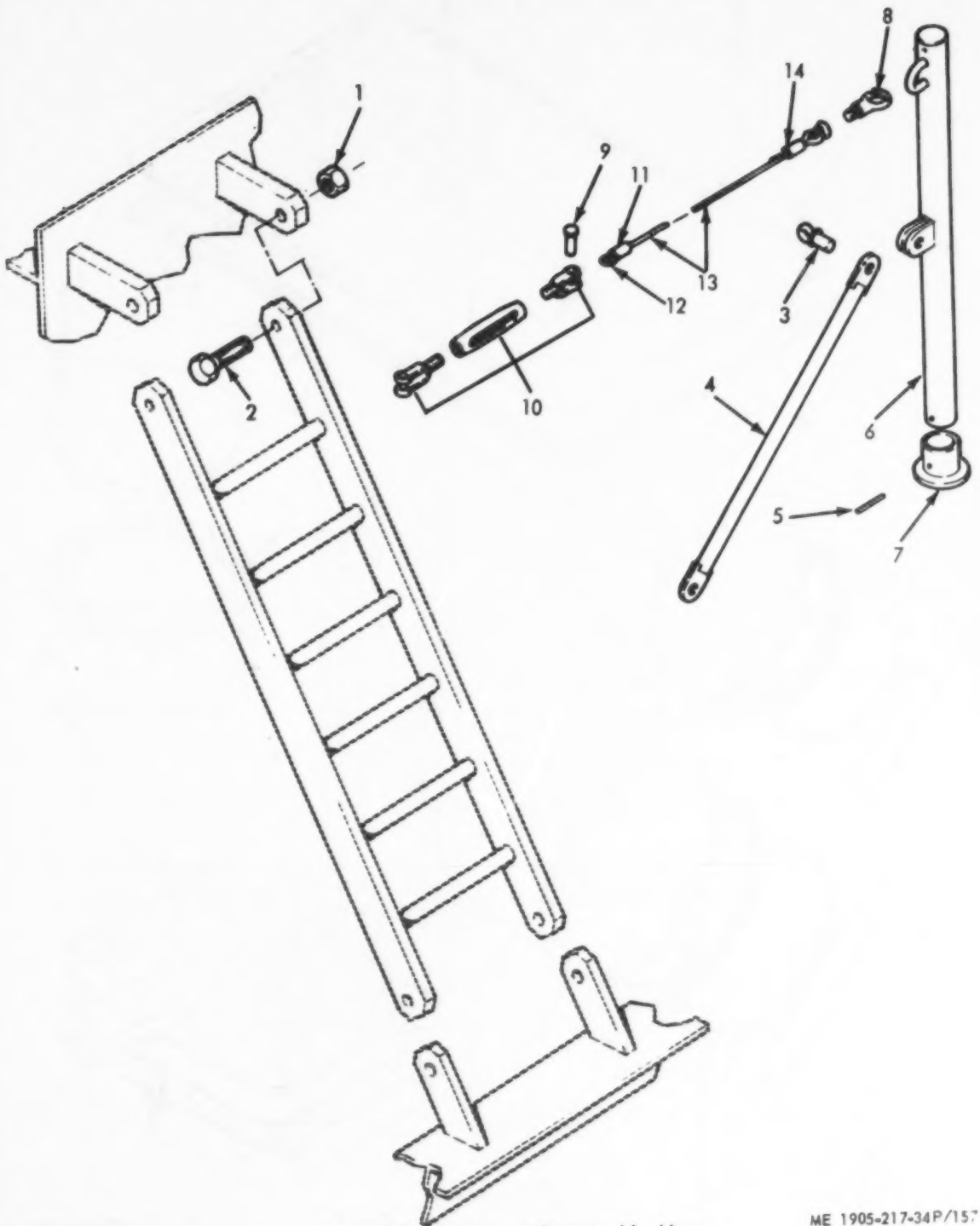

Figure 157. Life Lines, Bitts, and Ladders

ME 1905-217-34P/157

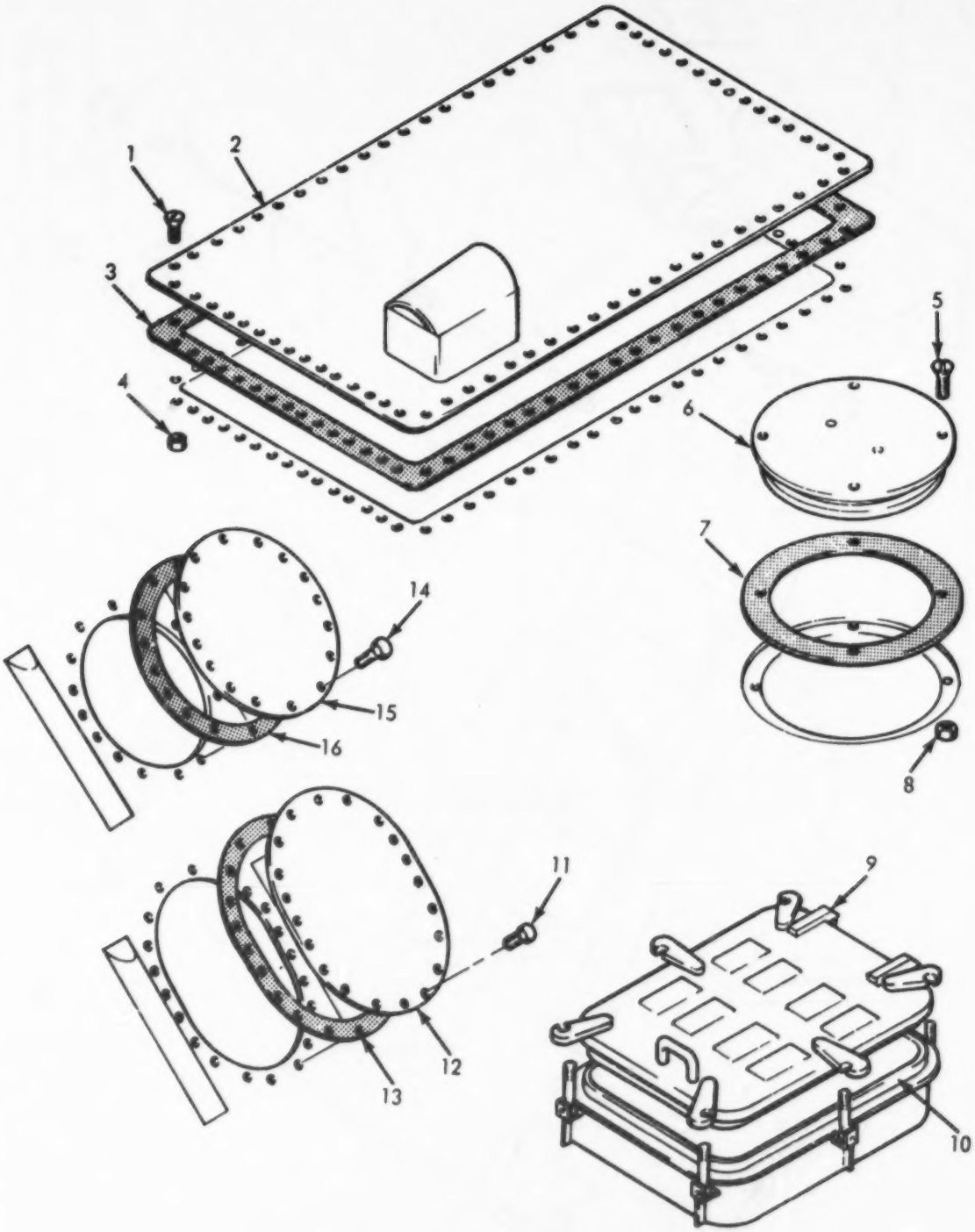

Figure 158. Miscellaneous Hull Components

ME 1905-217-34P/158

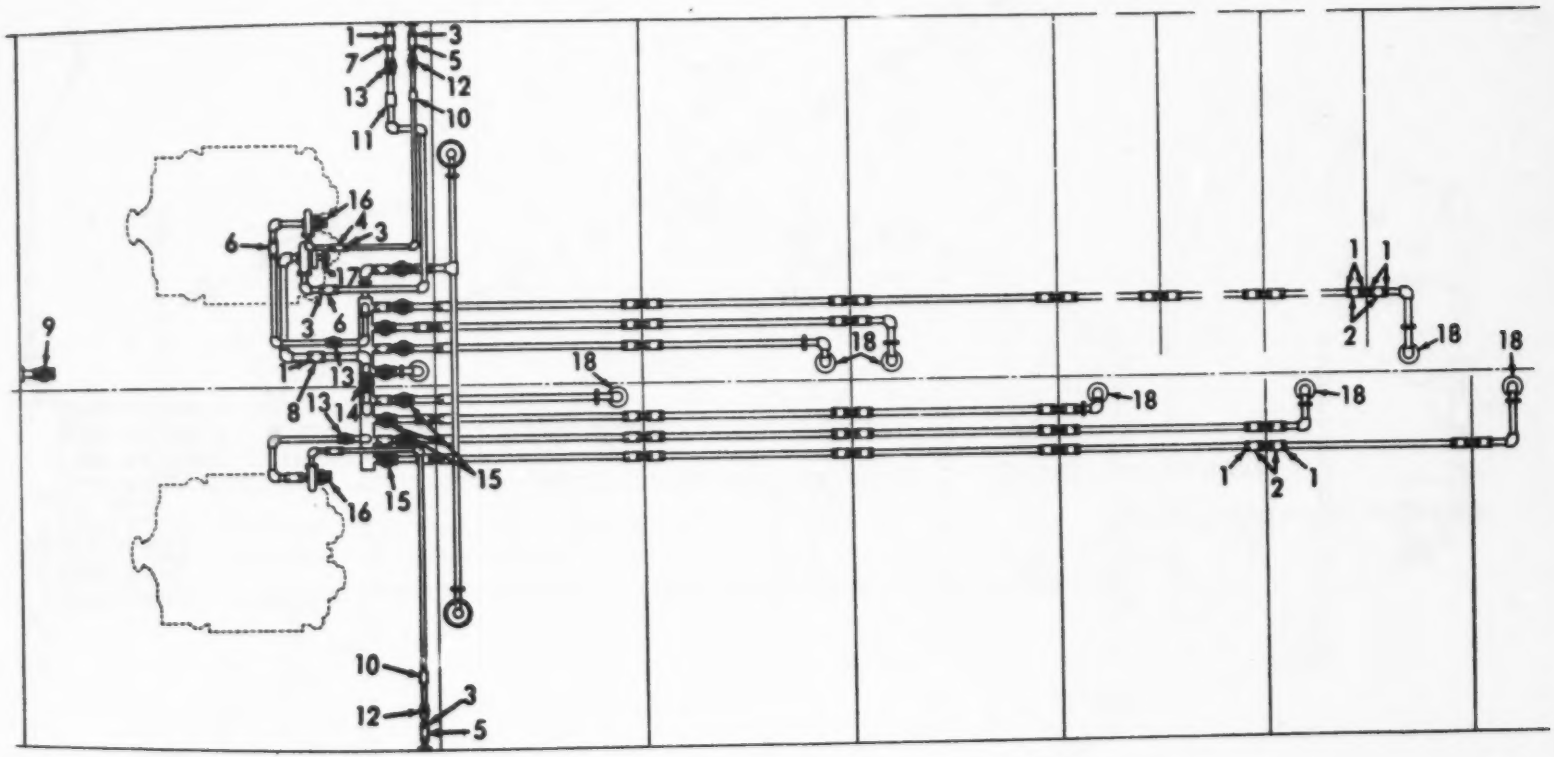

Figure 159. Piping, Bilge

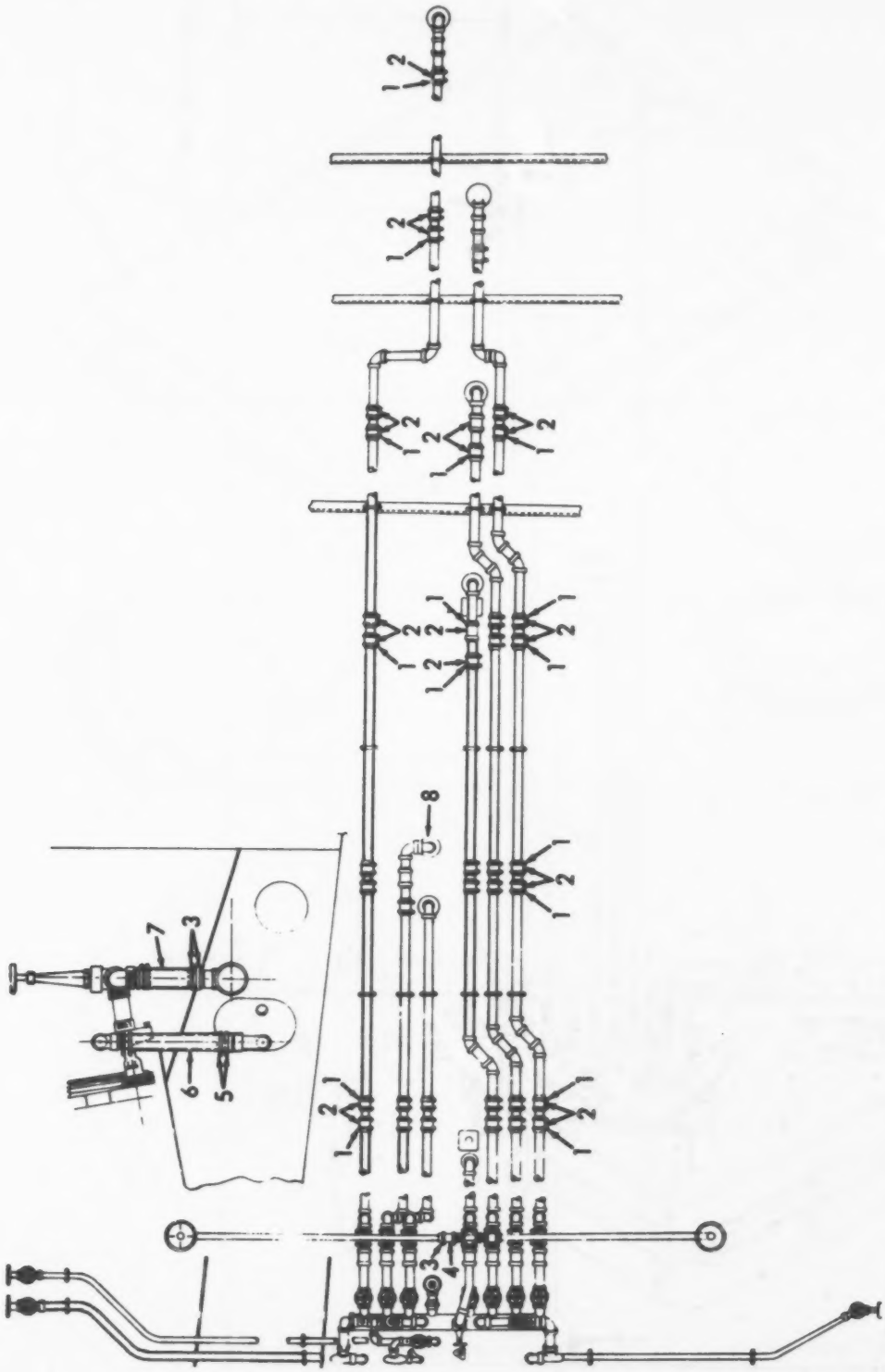
1
2
3
4
5
6
7
8

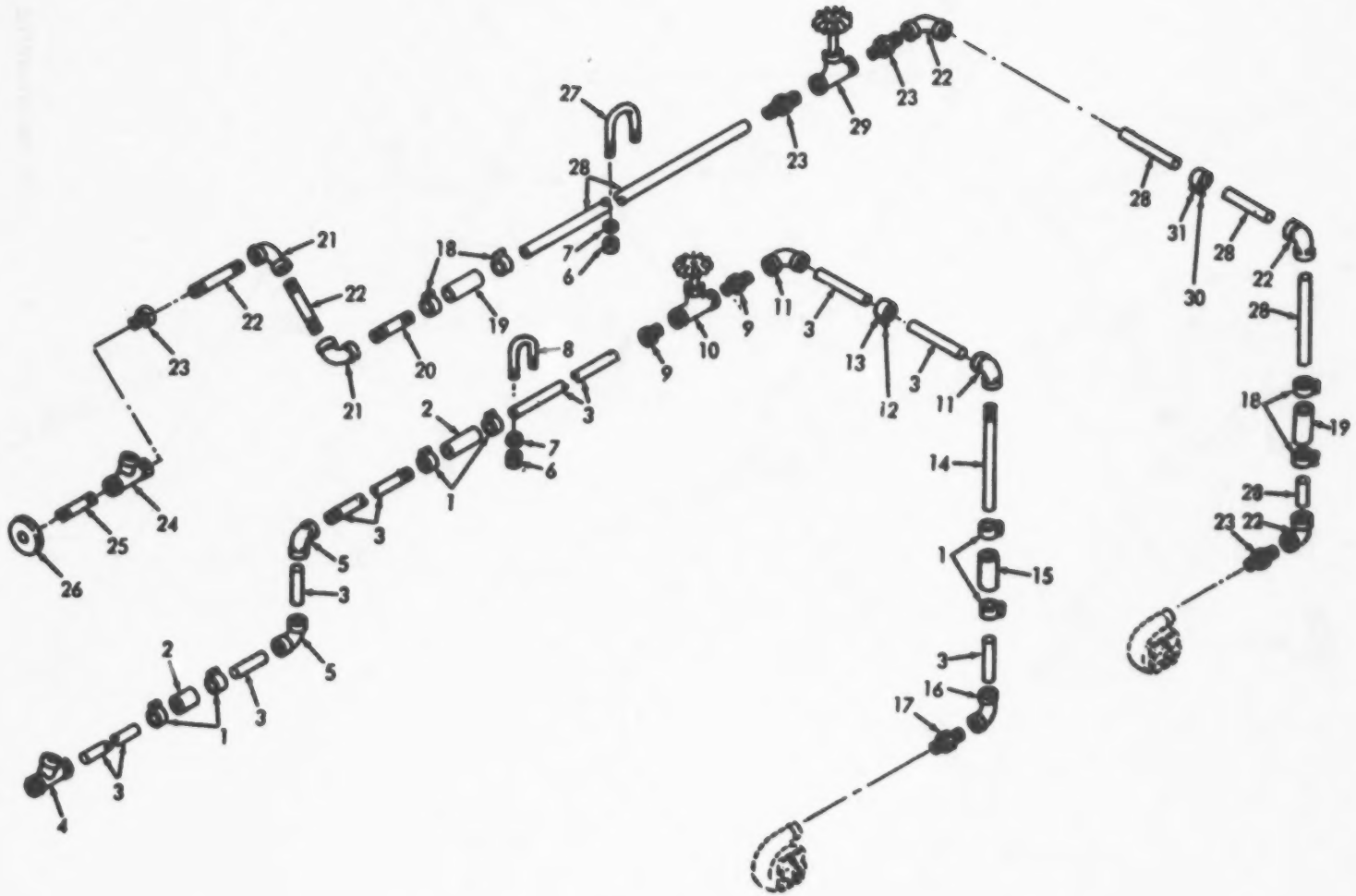

ME 1905-217-34P/161

Figure 161. Piping, Bilge

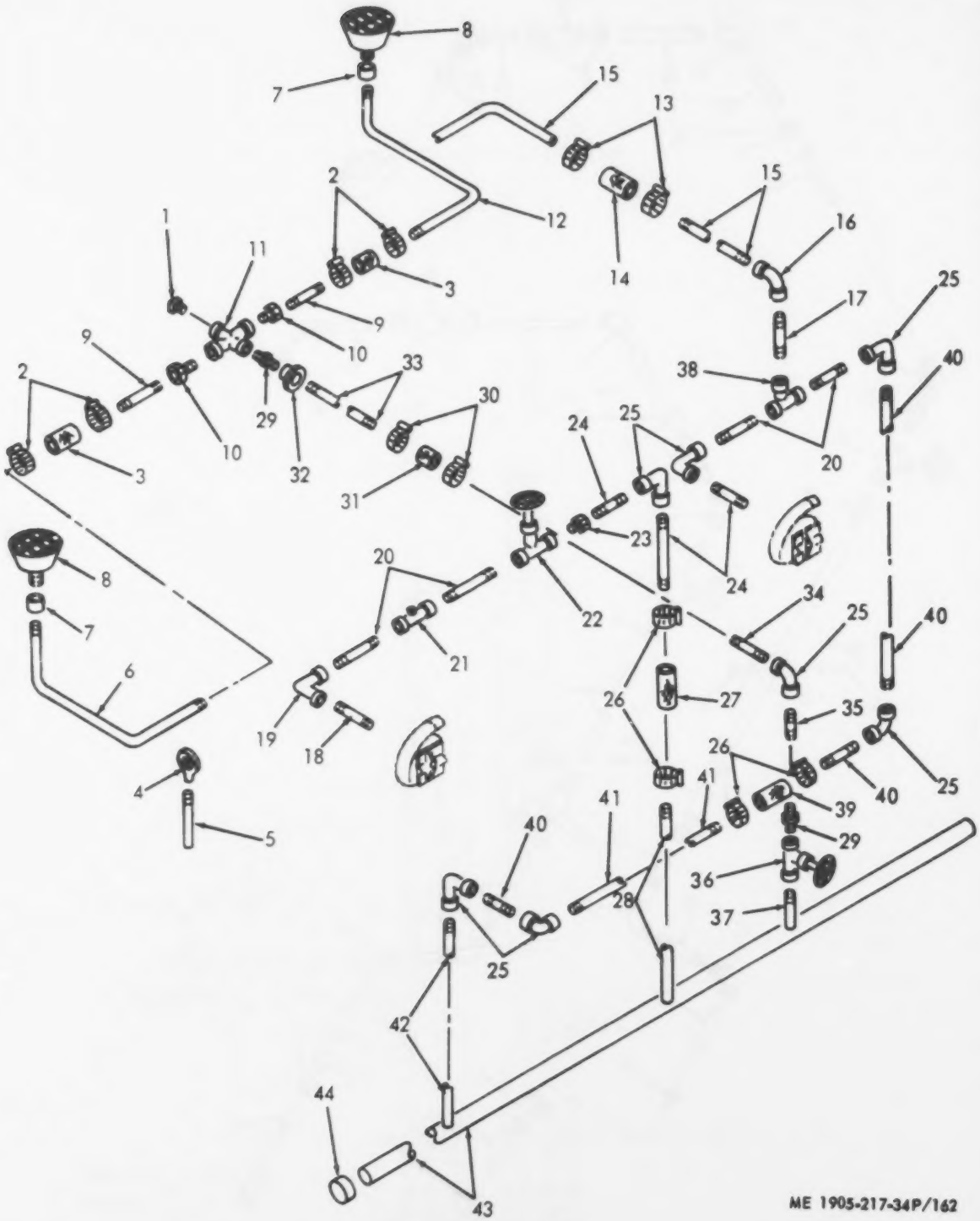

Figure 162. Piping, Bilge

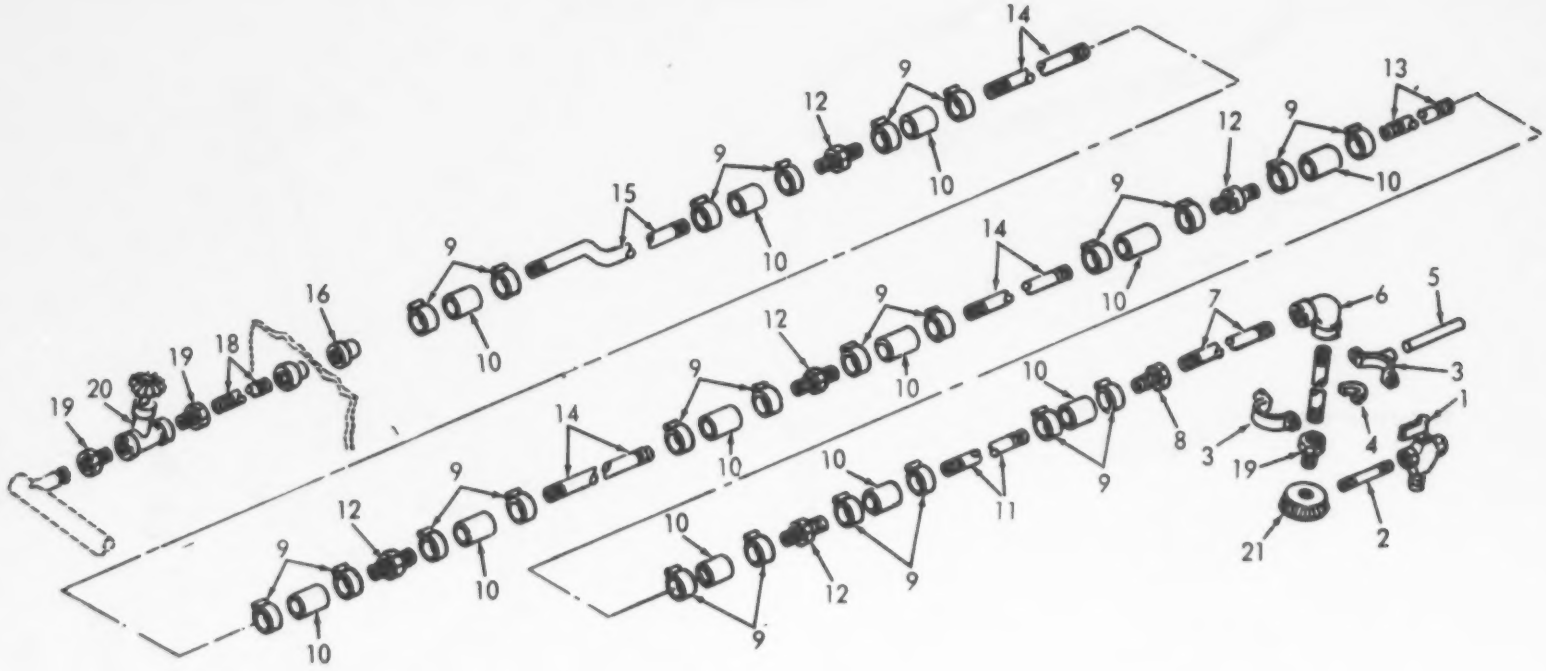

Figure 163. Piping, Bilge

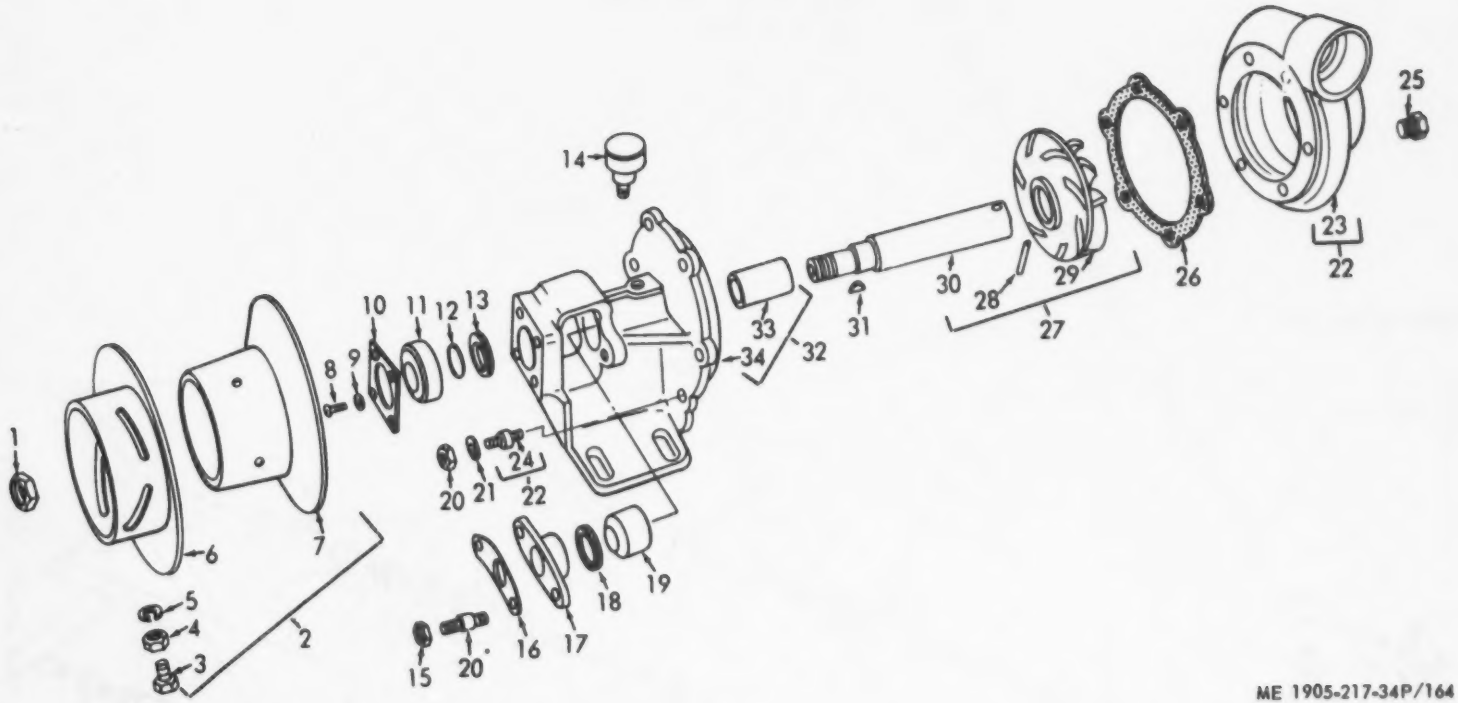

Figure 164. Pump, Bilge

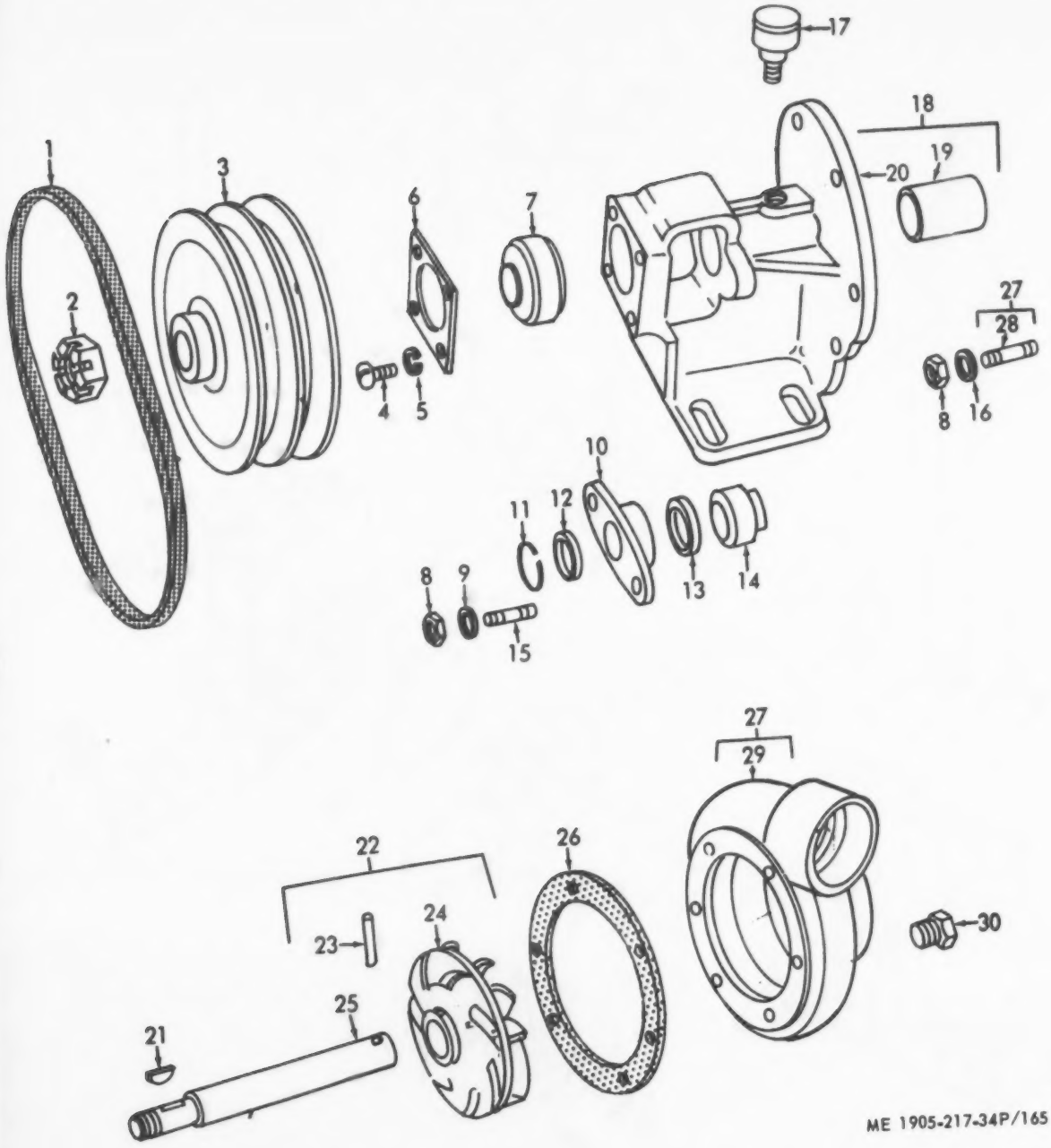

ME 1905-217-34P/165

Figure 165. Pump, Bilge

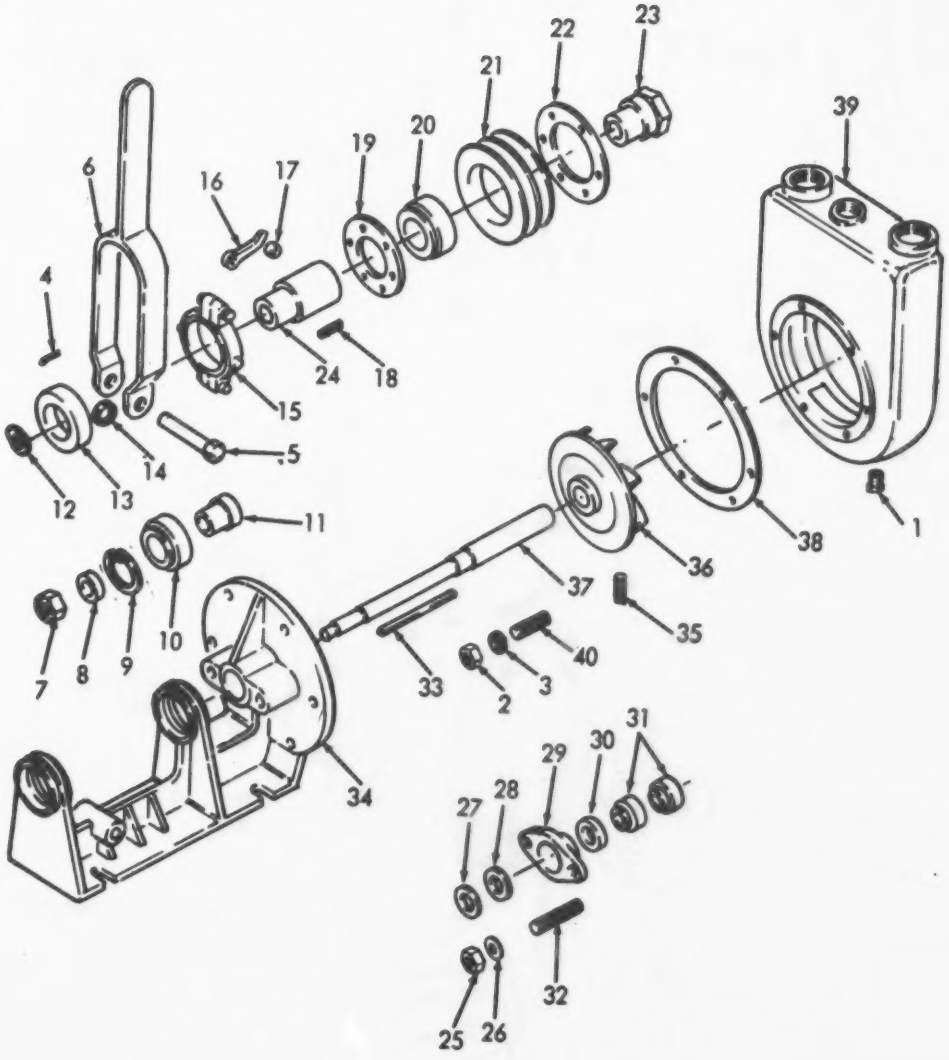

Figure 166. Pump, Bilge

ME 1905-217-34P/166

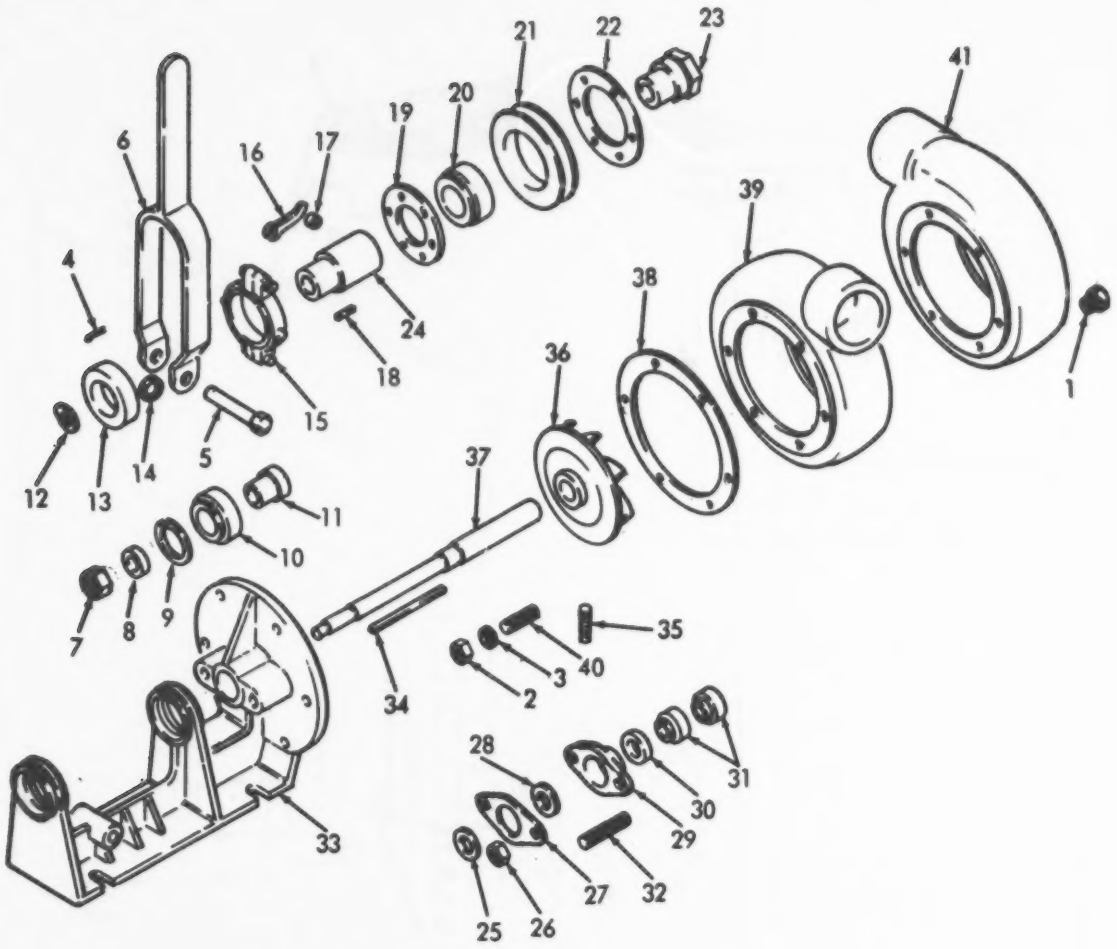

ME 1905-217-34P/167

Figure 167. Pump, Bilge

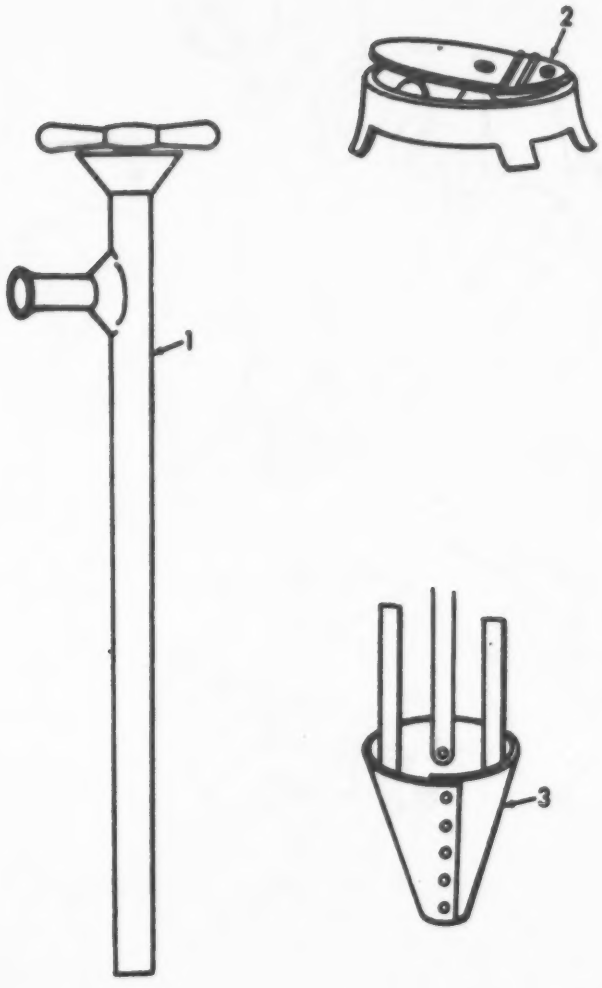

ME 1905-217-34P/168

Figure 168. Pump, Bilge Hand

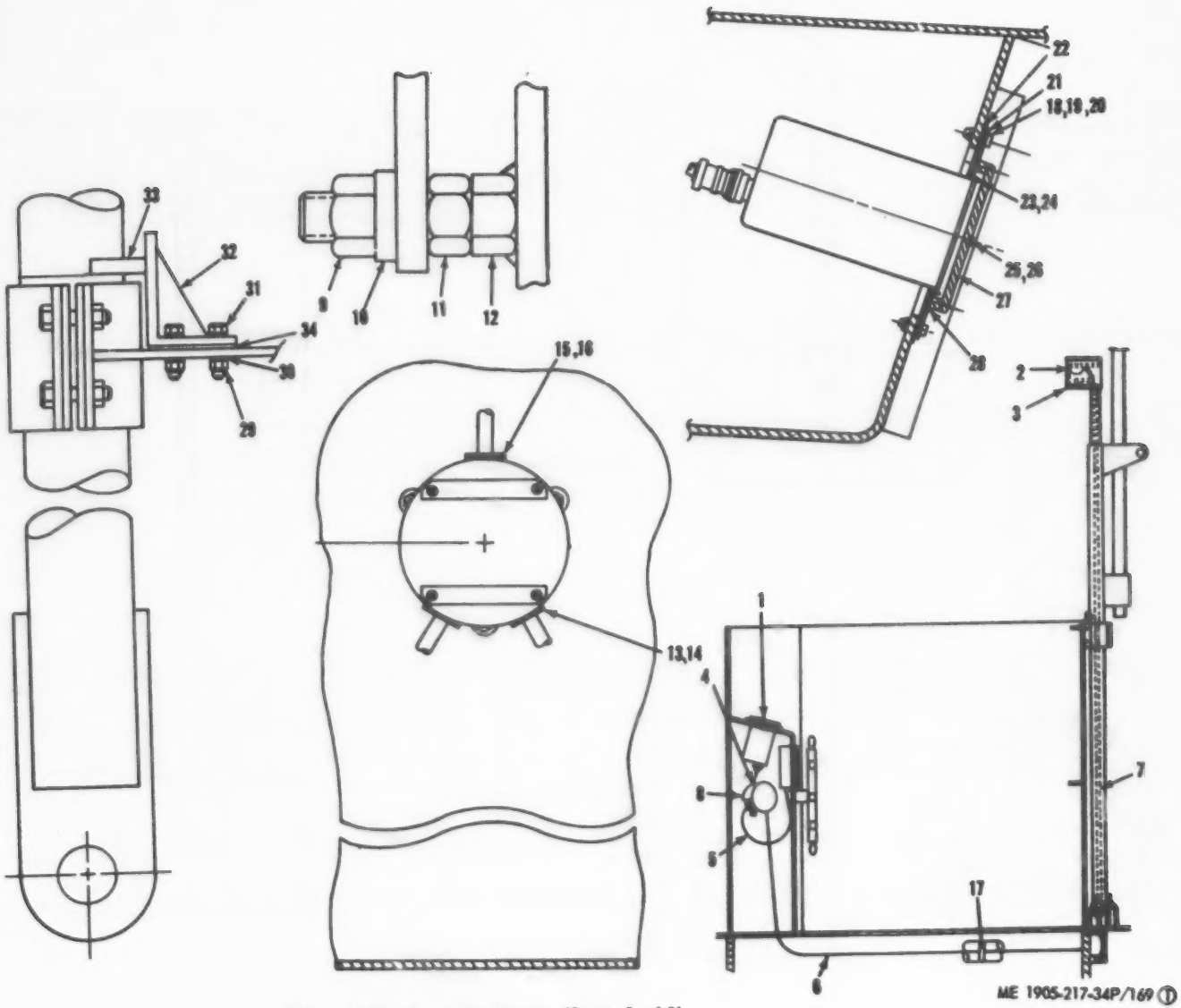

Figure 169. Compass System (Sheet 1 of 2)

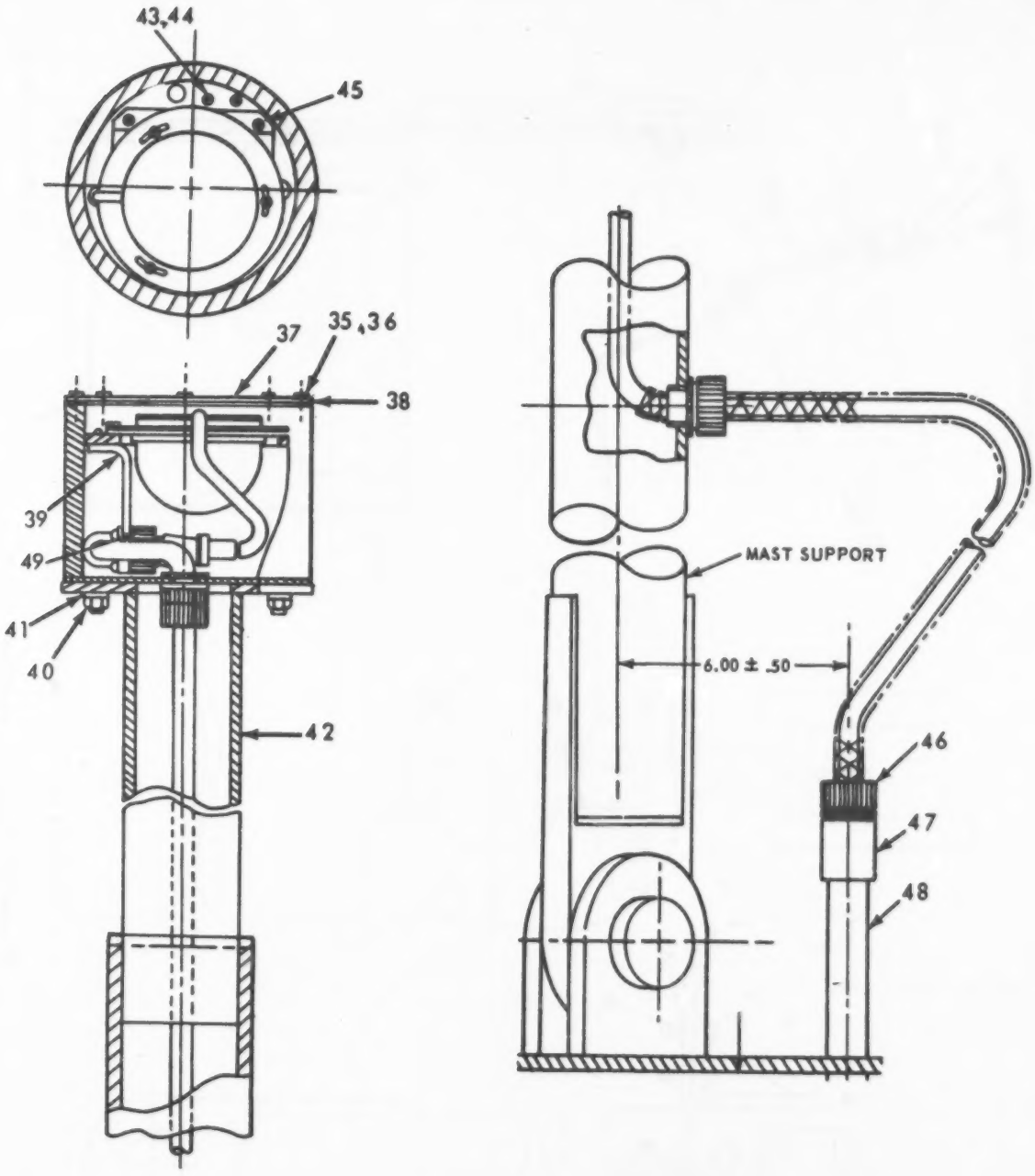

ME 1905-217-34P/169 (2)

Figure 169. Compass System (Sheet 2 of 2)

Section IV. INDEX-FEDERAL STOCK NUMBER AND REFERENCE NUMBER CROSS-REFERENCE TO FIGURE AND ITEM NUMBER

Stock Number	Figure No.	Item No.
1730-871-7422	146	5
2010-076-3737	150	14
2010-110-1881	62	
2010-110-1883	39	14
2010-111-6424	61	17
2010-127-4796	150	13
2010-388-7154	62	11
2010-389-6070	62	
2010-499-3586	62	16
2010-540-7689	150	4
2010-540-7690	150	4
2010-545-3109	62	3
2010-547-7941	62	20
2010-591-2614	76	
2010-592-0286	76	
2010-895-3406	44	21
2010-937-5599	62	
2030-059-6596	113	11
2030-059-6606	113	7
2030-059-6607	113	8
2030-110-1885	44	27
2030-110-1886	44	28
2030-110-1887	44	33
2030-110-1888	45	
2030-110-1889	44	17
2030-110-1890	44	
2030-110-1893	44	5
2030-110-3446	112	
2030-110-3447	138	
2030-110-3450	98	
2030-113-9454	139	11
2030-113-9455	139	22
2030-113-9456	139	17
2030-113-9457	139	
2030-113-9458	139	27
2030-113-9459	139	
2030-113-9466	98	7
2030-113-9467	99	7
2030-113-9468	99	20
2030-113-9469	98	1
2030-113-9470	98	
2030-113-9471	98	7
2030-113-9472	99	20
2030-113-9476	113	28
2030-113-9477	113	1
2030-113-9478	113	6
2030-113-9479	100	31
2030-115-0120	98	1
2030-115-0121	100	31
	101	19
2030-116-6664	113	
2030-129-6496	99	22
2030-155-2910	113	
2030-223-3233	117	4
2030-708-3626	113	14
2030-708-3628	113	17
2040-115-3703	30	5
2040-115-3705	30	
2040-115-3707	154	18
2040-115-3708	154	26
2040-115-3709	154	17
2040-229-8989	149	1
2040-229-8992	149	15
2040-229-9000	149	17
2040-229-9001	149	4
2040-229-9002	149	6
2040-367-1793	165	19
2040-705-9249	150	11
2040-826-6021	30	6
215-331-6790	74	16
2520-241-4429	52	21
2520-347-3833	44	9
2520-354-6873	44	20
2520-354-6922	44	22
2520-374-7283	44	36
2520-390-8843	44	40
2520-848-1831	124	22
2520-891-1920	109	8
	140	4
2530-019-7502	105	4
2530-034-4188	138	12
2530-226-6413	99	

Stock Number	Figure No.	Item No.
2530-241-4430	57	
2530-292-4407	105	5
2530-359-4445	105	15
2530-420-4472	99	22
2530-462-2149	132	25
2530-607-3500	106	
2530-716-7950	99	14
2530-738-0670	99	7
2530-837-1286	99	5
2530-891-5998	99	10
2540-881-0467	156	3
2590-056-2182	130	17
2590-065-9639	130	12
2590-089-4449	140	5
2590-089-4450	109	3
	140	14
2590-089-4451	109	11
	140	6
2590-227-8342	131	15
2590-227-8343	131	3
2590-227-8347	135	15
2590-227-8349	135	13
2590-227-8350	135	21
2590-355-4430	105	6
2590-769-9882	76	
2805-551-6146	73	3
2805-735-0860	75	9
2805-869-3457	127	18
2805-938-9308	56	11
2805-938-9311	56	30
2815-012-9521	74	14
2815-019-4682	2	17
2815-028-6741	73	5
2815-076-6070	74	16
2815-083-8021	68	19
2815-097-2476	73	8
2815-119-2687	67	30
2815-119-2781	72	52
2815-119-2944	34	34
2815-127-3055	72	60
2815-127-3058	73	9
2815-174-5642	35	26
2815-214-3760	27	36
2815-252-8444	66	17
2815-272-6028	64	9
2815-275-0502	67	6
2815-288-0695	73	
2815-288-3642	4	1
2815-288-4869	67	3
2815-292-3161	75	15
2815-301-7708	16	11
2815-318-9636	61	39
2815-322-9934	62	19
2815-324-0512	73	1
2815-328-5376	34	44
2815-333-4865	33	37
2815-345-6073	66	19
2815-345-6074	66	11
2815-346-4551	62	13
2815-346-4554	42	15
2815-347-1932	14	1
2815-354-1443	67	28
2815-354-1458	74	17
2815-354-1528	75	18
2815-354-1532	67	29
2815-362-9385	67	4
2815-363-6047	68	32
2815-363-7300	73	16
2815-363-7980	13	6
2815-363-7984	67	31
2815-363-8122	16	18
2815-363-8136	35	21
2815-363-8153	71	
2815-363-8155	74	9
2815-363-8167	72	25
2815-363-8168	72	25
2815-363-8177	38	10
2815-363-8228	2	23
2815-363-8331	42	14
	42	20
2815-363-9334	63	16
2815-364-3080	68	38

Section IV INDEX-FEDERAL STOCK NUMBER AND REFERENCE NUMBER CROSS-REFERENCE TO FIGURE AND ITEM NUMBER

Stock Number	Figure No.	Item No.
2815-364-3092	35	17
2815-364-3307	66	12
2815-364-3424	34	33
2815-379-4286	72	
2815-379-4290	34	45
2815-389-6036	64	3
2815-389-6059	61	37
2815-389-6060	150	9
2815-395-0925	61	15
2815-400-0496	27	11
	28	14
2815-416-3923	65	18
2815-416-3972	33	76
2815-416-4138	40	12
2815-416-4143	40	11
2815-416-4168	42	32
2815-421-1473	3	
2815-428-9720	34	
2815-428-9722	34	
2815-445-8776	27	24
2815-447-3167	71	8
2815-470-0939	69	4
2815-499-3585	62	22
2815-499-3592	62	24
2815-499-3593	62	6
	62	18
2815-511-2336	74	13
2815-511-2639	1	
2815-522-1871	75	
2815-522-1872	75	
2815-527-2312	5	29
2815-527-2322	64	12
2815-532-8082	66	3
2815-560-6095	65	15
2815-567-4398	66	20
2815-569-1225	35	27
2815-572-2103	61	38
	63	5
2815-587-3399	42	
2815-587-3400	42	
2815-588-5112	61	9
2815-589-1433	16	5
2815-589-9414	68	22
	68	29
2815-591-2653	61	22
2815-592-0379	61	
2815-600-5567	66	9
2815-605-4944	41	5
2815-612-3111	34	42
2815-621-3932	33	
2815-629-6095	72	
2815-664-4216	67	5
2815-673-5498	34	
2815-673-5503	34	
2815-678-4019	67	21
2815-691-9689	61	34
2815-691-9701	73	2
2815-696-1544	67	7
2815-711-6255	55	46
2815-711-6256	55	16
2815-711-6257	55	40
2815-735-4283	2	22
2815-745-7738	68	19
2815-785-5230	42	28
2815-791-9666	62	1
2815-792-2714	42	18
2815-793-6786	28	
2815-797-4806	42	12
2815-799-7771	40	14
2815-815-2938	42	24
	42	26
2815-885-5731	66	16
	66	18
2815-886-6104	35	14
2815-886-6105	35	11
2815-886-6106	35	15
2815-898-4228	1	6
2815-898-4468	27	35
2815-901-0977	36	1
2815-902-1832	17	29
2815-902-1870	64	11
2815-902-1882	5	6
2815-906-1591	59	
2815-922-2017	33	
2815-922-2027	4	10
2815-927-1051	33	76
2815-947-4290	4	11
2815-981-1529	2	13
2910-014-8344	15	19
2910-073-3010	15	
2910-076-9751	94	4
2910-110-9508	33	
2910-110-9509	33	
2910-110-9510	33	
2910-115-3694	33	
2910-126-9712	15	22
2910-126-9713	15	20
2910-209-8731	15	27
2910-218-6837	15	12
2910-235-4313	8	
2910-272-6038	15	18
2910-287-1912	6	8
2910-316-7641	16	8
2910-318-3485	15	21
2910-354-1573	15	30
2910-364-3133	15	25
2910-364-3439	67	25
2910-399-5550	15	
2910-420-8919	7	15
2910-420-8923	33	
2910-420-8925	33	
2910-420-8926	33	49
2910-420-8927	16	16
2910-421-1539	7	
2910-421-1540	7	12
2910-421-1541	33	26
2910-421-1542	33	72
2910-421-1543	17	12
2910-421-1546	17	8
2910-421-1547	17	30
2910-421-1548	17	33
2910-421-1549	17	
2910-424-7431	7	7
	8	7
2910-435-2440	17	33
2910-435-4472	33	
2910-435-7590	17	40
2910-446-6602	67	32
2910-459-6696	10	23
2910-477-6802	11	1
2910-508-0486	15	6
2910-524-7862	13	3
2910-588-8440	4	4
2910-588-8443	17	
2910-588-8444	17	35
2910-590-1709	6	21
2910-590-1712	17	20
2910-600-4717	15	15
2910-608-0485	15	4
2910-620-7460	15	3
2910-626-4361	15	13
2910-646-9727	94	1
2910-673-3551	16	14
2910-698-2936	15	
2910-775-1380	16	21
2910-775-1383	16	16
2910-808-2655	13	
2910-922-0273	87	10
2910-922-0347	84	
2910-922-0348	84	
2910-922-0349	87	5
2910-922-0350	87	6
2910-922-0351	87	10
	87	11
2910-922-0352	87	10
	87	11
2910-932-4813	27	33
	28	34
2910-937-6573	13	
2920-060-0011	46	21
2920-115-0133	52	3
2920-115-0134	52	3
2920-133-3295	46	32
	46	50

best copy available

Section IV INDEX-FEDERAL STOCK NUMBER AND REFERENCE NUMBER CROSS-REFERENCE TO FIGURE AND ITEM NUMBER

Stock Number	Figure No.	Item No.
2920-276-9263	48	
2920-358-9830	48	36
2920-477-6103	46	
2920-477-6106	46	61
2920-477-6107	46	30
2920-633-5477	52	8
2920-640-7462	48	
2920-646-6275	52	8
2920-652-7998	47	36
2920-777-3392	47	
2920-796-1346	56	2
2920-848-1849	99	23
2930-015-3071	5	3
2930-019-4754	28	25
2930-025-6743	26	
2930-097-2479	26	12
2930-294-4604	26	18
2930-313-6445	26	12
2930-330-4587	28	29
2930-349-6450	27	18
2930-363-8226	2	18
2930-377-2472	5	19
	38	13
2930-379-4295	5	
2930-461-3897	27	
	28	
2930-461-3898	27	
2930-462-8114	18	26
2930-565-5758	5	30
2930-590-1716	18	3
2930-590-1717	27	21
2930-672-6758	107	7
2930-767-0508	28	
2930-786-6193	18	27
2930-876-6768	34	6
2930-932-4819	28	23
2930-986-4068	26	
2940-019-8087	36	11
2940-328-8458	8	16
2940-499-1689	9	9
2940-580-6238	3	11
2940-792-2711	37	6
2940-792-2712	37	1
2940-810-5686	59	3
	60	3
2940-836-8263	3	1
2940-897-2641	59	2
	60	2
2940-922-0353	67	11
2940-944-6249	3	17
	36	17
2940-977-0902	108	9
2990-005-7652	60	
2990-078-2617	57	4
2990-078-2618	57	5
2990-115-0137	52	
2990-126-5646	33	50
2990-149-1803	33	61
2990-165-9556	25	8
2990-165-9559	25	8
2990-168-2291	44	
2990-223-3291	25	8
2990-223-3300	25	8
2990-333-4862	33	
2990-354-1213	33	52
2990-354-1405	33	41
2990-363-7395	1	3
2990-363-8080	33	81
2990-363-8095	33	52
2990-363-8103	33	80
2990-363-8109	33	53
2990-363-8110	33	51
2990-363-8112	33	51
2990-385-1785	33	71
2990-416-3957	33	72
2990-416-3969	33	70
2990-437-0758	24	5
2990-437-3759	24	5
2990-457-0162	115	5
2990-477-6118	83	
2990-477-6120	83	48
2990-477-6122	93	19
2990-477-6123	93	18
2990-477-6124	93	17
2990-477-6125	93	16
2990-477-6126	92	11
2990-477-6127	92	10
2990-477-6130	93	20
2990-484-0687	92	10
2990-485-9458	92	11
2990-592-0324	17	22
2990-593-1743	33	64
2990-597-8947	33	36
2990-600-6713	33	60
2990-623-9924	41	
2990-625-9535	55	33
	55	37
2990-625-9912	55	32
	55	34
	55	38
2990-629-9713	55	
2990-646-6439	52	19
2990-646-6796	52	16
2990-658-8223	55	21
2990-658-8224	55	23
2990-658-8226	55	27
2990-658-8227	55	25
2990-658-8229	55	45
2990-658-8230	55	41
2990-658-8231	55	15
	55	18
2990-691-7917	33	39
2990-771-0826	55	20
2990-824-0454	57	
2990-832-0167	52	15
2990-844-2379	52	
2990-895-3402	44	29
	44	34
2990-895-3403	44	30
	44	35
2990-895-3407	44	11
2990-897-2612	115	4
2990-897-2625	52	24
2990-897-2626	52	22
2990-897-2649	52	23
2990-897-2665	56	23
	56	25
2990-897-2679	58	14
2990-919-6564	44	3
3010-294-5173	126	11
3010-437-1792	84	25
3010-530-8721	142	20
3010-937-1843	87	4
3010-937-1869	87	7
3020-196-3803	76	
	80	
3020-231-8734	76	1
	80	2
3020-272-6104	72	45
3020-462-2148	132	25
3020-462-2152	135	10
3020-517-3167	42	31
	42	34
3020-528-9333	35	26
3020-541-1591	107	9
3020-833-2856	137	1
3020-833-2869	134	6
3020-887-8672	157	14
3020-922-0115	136	4
3030-460-2502	165	1
3030-528-4616	159	16
3030-528-4627	159	17
3030-529-3479	46	1
3030-580-9453	46	1
3040-881-0258	84	36
3040-881-3419	84	39
3040-881-3420	85	16
3040-887-9939	84	10
3040-888-2583	85	17
3040-922-3272	84	35
3040-922-3276	166	16
3040-922-3277	166	6
3050-269-2819	63	19
3050-528-4626	46	1

Section IV. INDEX-FEDERAL STOCK NUMBER AND REFERENCE NUMBER CROSS-REFERENCE TO FIGURE AND ITEM NUMBER

Stock Number	Figure No.	Item No.
3110-071-6402	33	58
3110-100-6149	53	9
	145	17
	146	19
3110-100-6150	35	28
3110-100-6151	145	16
	146	18
3110-100-6158	79	5
3110-100-6161	53	12
	113	16
3110-100-6162	113	27
3110-109-1123	105	17
	106	13
3110-112-6009	79	25
3110-112-6022	79	24
3110-114-5687	130	24
3110-142-4493	76	35
3110-144-8367	61	16
	61	18
3110-144-8756	55	19
3110-144-8937	127	34
3110-155-6430	128	10
3110-156-1654	33	86
3110-156-3502	167	10
3110-156-3521	165	7
3110-156-3576	166	20
	167	20
3110-156-7721	33	25
3110-183-6912	34	39
3110-193-0632	166	10
3110-198-1298	166	17
3110-227-2994	61	36
3110-227-3237	52	14
	56	8
3110-227-3241	56	12
3110-227-3252	127	26
3110-236-3695	52	30
3110-293-8320	52	7
3110-368-6243	131	18
3110-400-3014	131	1
3110-406-3748	46	22
3110-439-2579	98	4
3110-456-6915	46	17
3110-458-2038	132	13
3110-462-4172	65	1
3110-516-5789	105	13
3110-516-5491	126	5
3110-554-3264	127	38
3110-554-3275	55	24
3110-554-3468	61	19
3110-601-0016	52	29
3110-726-3110	33	85
3110-766-2360	64	4
3110-770-6097	55	22
3110-844-0537	99	11
3110-869-4648	137	3
3110-869-4649	134	4
3110-869-4651	136	3
3110-897-2536	56	42
3110-906-1767	130	4
3120-003-9416	66	6
3120-005-5796	84	19
3120-294-0701	47	30
	48	30
3120-346-4552	62	
3120-354-1224	73	4
3120-374-4882	73	15
3120-416-4151	62	9
3120-454-3378	126	26
3120-456-6925	131	5
3120-456-6928	47	5
	48	5
3120-463-5581	154	25
3120-463-5582	154	23
3120-477-4247	52	26
3120-517-8329	73	10
3120-589-3282	68	23
	68	31
3120-592-0393	81	9
3120-661-3259	35	29
3120-661-4397	62	10
3120-661-4397	62	12
3120-661-5787	164	33
3120-661-6763	47	33
	48	33
3120-661-8673	72	46
3120-662-8425	73	
3120-662-8992	74	
3120-785-3994	42	22
3120-793-6354	83	34
3120-818-1856	68	35
3120-889-9567	83	58
3120-922-2313	100	
3120-922-4137	136	6
3340-363-7977	75	8
3340-772-0413	81	10
3655-446-7326	44	14
3815-991-1639	105	
3820-599-4426	144	13
3830-929-0753	112	16
3930-957-8492	63	24
3930-136-5066	140	13
3930-839-3256	124	
3930-848-3659	99	19
3930-848-3371	99	8
3930-900-5161	109	10
3930-900-6516	99	21
3930-918-1920	138	1
3930-918-3760	138	18
3930-918-3761	138	24
3930-934-0531	109	9
	140	8
3930-940-7634	176	8
3950-119-0454	131	
3950-119-0457	135	11
3950-119-0458	135	13
3950-119-0459	135	14
3950-119-0460	134	2
3950-119-0461	134	
3950-119-0462	134	9
3950-119-9842	128	4
3950-119-9843	127	31
3950-119-9844	127	23
3950-119-9845	127	15
3950-119-9846	127	24
3950-119-9847	135	9
3950-119-9848	135	12
3950-120-9922	135	
3950-121-0132	131	13
3950-121-0133	133	
3950-121-5917	126	
3950-121-5918	126	12
3950-121-5923	126	
3950-121-5925	127	
3950-121-5926	127	16
3950-121-5927	132	
3950-122-3960	127	35
3950-122-3961	127	36
3950-122-9705	127	7
3950-832-0156	135	
3950-832-0161	132	3
3950-832-0163	136	9
3950-864-8525	135	18
3950-864-8552	137	
3950-864-8565	137	7
3950-864-9990	137	6
3950-869-0124	134	8
3950-918-3626	135	5
4010-228-9957	10	
	11	
4010-228-9963	139	
4010-273-2934	157	
4010-912-0529	4	3
4020-689-5688	97	
4030-286-5429	157	11
4030-770-6105	80	1
4030-805-5836	157	12
4140-422-3986	89	
4140-457-3603	88	
4310-591-2684	167	28
4320-011-7536	124	
4320-034-3868	144	26
4320-063-7471	164	27

Section IV. INDEX-FEDERAL STOCK NUMBER AND REFERENCE NUMBER CROSS-REFERENCE TO FIGURE AND ITEM NUMBER

Stock Number	Figure No.	Item No.
4320-071-1982	167	
4320-073-1843	165	22
4320-077-0953	145	18
	146	20
4320-078-2501	167	
4320-115-8802	105	
4320-115-8803	105	
4320-115-8804	145	
4320-115-8805	125	
4320-115-8806	125	
4320-115-8807	124	2
4320-115-8808	124	
4320-115-8809	130	
4320-115-8810	106	
4320-115-8811	106	
4320-116-9719	164	
4320-116-9720	165	
4320-168-0892	164	27
4320-168-0894	167	27
4320-215-1422	109	
4320-218-2311	166	38
4320-235-1635	107	6
4320-235-1663	165	22
4320-244-9865	168	1
4320-251-2138	108	
4320-251-2139	159	18
4320-291-1180	142	13
4320-350-8725	96	
4320-363-7364	164	12
	167	25
4320-367-1801	165	13
4320-379-4287	72	
4320-389-9090	27	
4320-391-9524	165	
4320-407-4646	146	13
4320-407-4648	146	10
4320-407-4650	146	12
4320-454-7856	130	
4320-454-7861	130	23
4320-454-7875	141	2
4320-454-7877	124	
4320-462-2147	132	18
4320-462-2151	132	17
4320-462-2153	125	
4320-462-2157	140	
4320-462-2162	106	5
4320-462-2163	106	14
4320-462-2168	106	
4320-557-9394	43	6
4320-557-9395	43	6
4320-591-2679	165	12
	166	28
4320-591-2684	164	13
4320-595-3333	164	
4320-621-5248	146	8
4320-621-5249	146	4
4320-684-7192	98	
4320-689-3036	43	4
4320-689-3037	43	4
4320-788-4589	125	21
4320-805-1262	145	8
4320-805-0199	144	2
4320-826-9807	130	7
4320-833-3004	146	14
4320-833-3005	146	7
4320-839-6239	98	
4320-864-4234	96	
4320-868-9568	125	
4320-868-9360	125	20
4320-897-2656	98	24
4320-906-0150	130	9
4320-913-1012	130	8
4320-922-0194	166	
4320-922-0195	166	
4320-922-0196	166	22
4320-922-0197	166	19
4320-922-0198	166	5
4320-922-0199	167	
4320-922-0204	167	
4320-922-0226	159	
4320-922-0227	159	
4320-932-1015	96	18
4320-932-1016	96	38
4320-932-1017	96	28
4320-932-3436	130	19
4320-934-9548	96	14
4320-936-3985	167	
4320-937-0986	166	
4320-937-1115	166	
4320-937-1136	166	17
4330-004-3748	140	
4330-028-3885	9	10
4330-088-2056	109	13
4330-415-1622	9	11
4330-454-8112	140	
4330-454-1372	141	4
4330-534-2401	6	
4330-708-9544	8	13
4330-786-1741	7	20
4420-600-5437	31	3
	32	3
4470-514-4804	33	24
4710-004-2297	23	
4710-006-1647	163	
4710-277-4534	11	
4710-277-4613	20	
4710-277-5452	161	
4710-277-5466	32	
4710-277-5471	169	
4710-277-5475	23	
	162	
4710-277-5528	21	
4710-277-6068	12	
	23	
4710-277-6069	20	
	23	
4710-277-6099	20	
4710-277-6101	23	
	162	
4710-277-6127	23	
	23	
4710-277-7736	22	19
4710-277-7748	11	
4710-277-8703	163	
4710-278-1952	118	
4710-278-2218	21	
4710-278-2219	22	
4710-278-2221	21	
4710-278-2222	21	
	161	
	161	
	162	
	162	
4710-278-2223	162	
	162	
	162	
	163	
	163	
4710-278-8096	118	
4710-278-8772	20	
	21	
4710-289-2851	23	
	162	
4710-289-2854	21	
	22	
	23	
4710-289-5945	22	
4710-640-1100	22	
4710-640-1104	22	
4710-684-3565	22	
4710-810-4505	51	
	51	
4710-822-9538	162	
4710-839-0408	21	
4710-846-1003	161	
	161	
	162	
4710-846-9210	123	
4710-978-7010	51	
	51	
	51	
4720-052-4939	118	
4720-057-0612	109	
	118	

Section IV. INDEX-FEDERAL STOCK NUMBER AND REFERENCE NUMBER CROSS-REFERENCE TO FIGURE AND ITEM NUMBER

Stock Number	Figure No.	Item No.
4720-067-0454	10	
	49	
	49	
	101	1
	102	
	102	
	103	
	103	
	104	
4720-106-6992	11	
4720-112-4558	64	10
4720-189-2779	20	
4720-189-9730	2	9
4720-197-1594	24	2
4720-230-6526	21	
	22	
	23	
	162	
4720-235-4120	20	
4720-235-4121	19	
	20	
	20	
	21	
	22	
	23	
	31	
	32	
	159	
4720-235-4122	19	
	21	
	161	
	162	
4720-235-4126	23	
	159	
	160	
4720-235-4127	21	
	159	
	161	
	162	
4720-235-4134	19	
4720-277-5026	5	
4720-277-9026	38	
4720-278-5051	18	2
	18	5
4720-287-4837	159	
	161	
	162	
	163	
4720-288-7996	23	
4720-288-9756	10	
	20	
	159	
	160	
4720-288-9761	150	
4720-288-9770	2	
	29	3
4720-288-9910	22	
	23	
4720-289-2615	49	
	49	
	50	
4720-289-6060	118	
4720-298-9910	21	
4720-407-6550	101	3
4720-420-7723	102	
4720-426-2934	10	4
4720-436-2937	10	5
4720-454-4933	160	
4720-457-6345	24	6
4720-459-2784	118	
4720-459-2787	118	
4720-529-1214	45	9
4720-541-8859	49	
4720-595-8015	22	
4720-557-9635	64	
4720-595-1820	150	
4720-639-9907	50	
4720-788-5936	3	
4720-837-1464	160	
4720-879-0776	51	32
4720-922-5136	102	
	103	
4720-930-4515	51	
4720-949-0457	11	
4730-004-0732	102	3
	102	28
	103	16
4730-011-3175	2	
	18	29
4730-011-3177	18	31
4730-011-8831	47	
	48	
4730-014-2435	10	2
4730-014-3343	18	11
4730-018-9566	35	
4730-019-4727	29	4
4730-021-1802	100	8
4730-028-3890	8	3
	9	4
4730-044-4692	36	18
	75	4
4730-044-4867	2	16
	75	5
4730-049-8126	155	3
4730-050-4208	17	7
	45	8
	45	10
4730-057-8113	11	15
4730-088-4550	141	3
4730-097-9771	141	5
4730-134-4222	162	30
	163	9
4730-142-1851	144	
4730-168-2107	25	10
4730-172-0040	148	3
4730-172-0049	80	16
4730-187-4191	7	8
4730-187-4207	3	18
	75	13
4730-187-4227	21	39
4730-187-4241	5	
	75	11
4730-187-7598	103	39
4730-193-0875	29	7
4730-193-2715	11	24
4730-193-7080	103	41
4730-194-0219	11	11
4730-196-2002	11	14
	12	2
4730-196-2058	103	42
4730-197-1595	150	5
4730-212-6331	66	1
4730-222-1844	23	36
4730-231-3016	100	11
4730-244-9864	52	9
4730-250-7953	161	21
4730-253-4413	71	4
4730-253-4414	71	2
4730-254-6238	11	28
	12	5
4730-254-6241	21	61
4730-263-5266	102	10
	103	15
	104	3
4730-273-6041	3	
4730-274-6285	29	5
4730-277-7611	33	
4730-277-7739	21	
4730-277-8182	18	6
4730-277-8643	33	
4730-277-8768	13	5
4730-278-2962	6	22
4730-278-3001	165	30
	166	1
4730-278-3559	103	4
4730-278-3561	103	18
4730-287-2889	164	25
	167	1
4730-288-9927	11	26
4730-289-2615	50	
4730-289-5176	29	10
	63	27
	71	1
	75	12

Section IV. INDEX-FEDERAL STOCK NUMBER AND REFERENCE NUMBER CROSS-REFERENCE TO FIGURE AND ITEM NUMBER

Stock Number	Figure No.	Item No.
4730-289-5484	100	28
4730-319-5878	51	
4730-334-7839	3	
4730-352-9414	115	6
4730-374-6960	51	
4730-384-0275	11	21
4730-389-6066	64	5185
4730-457-8343	141	
4730-490-4006	102	18
	103	12
4730-497-1709	11	29
4730-499-3556	2	3
4730-499-3597	2	8
4730-522-2252	33	
4730-540-2612	33	
4730-540-4027	105	3
4730-542-5598	102	20
	104	11
4730-555-1764	103	36
4730-592-0429	2	6
4730-595-0670	169	47
4730-595-0792	4	5
4730-604-7953	2	24
	18	30
	63	28
	75	6
4730-618-7057	101	12
	103	38
4730-628-4815	100	26
4730-628-4816	100	10
	100	27
4730-632-3421	35	4
4730-674-6831	138	9
4730-682-7088	118	
4730-701-9364	39	1
4730-722-3591	162	29
	163	19
4730-764-1661	103	25
4730-764-3046	104	14
4730-770-0029	79	1
4730-770-6109	55	26
	55	39
4730-781-4996	104	1
4730-784-1879	100	12
4730-785-3863	5	13
4730-789-3082	101	5
4730-794-6797	161	9
	162	7
4730-801-1144	102	2
4730-802-2815	118	41
4730-802-8876	104	15
4730-815-3439	100	20
4730-818-5197	161	16
4730-834-4521	100	19
4730-839-1522	138	21
4730-845-4100	162	23
4730-849-7155	118	51
4730-864-6120	139	8
4730-865-9251	100	15
4730-879-5398	10	
	104	8
4730-879-8363	140	1
4730-879-8366	144	21
4730-879-8370	132	4
	135	24
4730-879-8381	135	25
4730-880-0035	120	3
4730-886-5967	3	14
4730-888-6933	10	14
4730-903-1341	23	21
4730-908-3193	11	12
	20	32
	21	1
	22	1
	22	5
	23	5
	161	18
	162	2
	162	13
	162	26
4730-908-3194	2	
	19	6

Stock Number	Figure No.	Item No.
4730-908-3194	20	14
	23	1
	23	14
	29	1
	87	1
4730-908-6274	118	11
4730-908-6292	5	1
	5	8
	11	5
	19	1
	20	49
	20	62
	21	9
	21	13
	22	7
	23	26
	29	8
	31	1
	32	6
	38	1
	159	1
	160	5
4730-908-6293	10	18
	20	5
	160	1
4730-908-6294	24	1
	25	9
4730-909-8627	18	1
	18	4
	19	3
	21	5
	159	3
	160	3
	161	1
4730-911-5342	100	29
4730-913-7406	51	
4730-939-6247	11	20
4730-943-0458	162	16
4730-945-5393	103	46
4730-975-1879	23	
4730-987-3620	64	
4730-993-7764	118	42
4730-999-8582	102	17
	103	7
	104	6
4810-086-2583	53	42
4810-086-2584	53	3
4810-694-9776	53	4
4810-757-7197	53	
4820-005-4893	23	37
4820-069-9103	53	32
4820-069-9105	53	17
4820-069-9106	53	22
4820-069-9107	53	27
4820-075-1862	49	22
4820-085-1961	53	11
4820-227-0169	49	19
4820-241-4427	53	46
4820-241-4428	109	1
4820-241-4431	49	20
4820-248-3701	100	33
	123	2
4820-276-9041	26	7
4820-287-2302	20	26
4820-287-3098	161	4
4820-322-8566	49	21
4820-360-8299	3	10
	36	10
4820-410-1946	110	
4820-454-7871	129	
4820-454-7874	129	5
4820-456-1145	144	
4820-456-1153	144	10
4820-456-1155	138	
4820-462-2154	144	5
4820-462-2156	144	19
4820-462-2164	102	5
	111	
4820-462-7792	144	
4820-462-7793	144	7
4820-462-7795	144	21
4820-462-7797	143	

Section IV. INDEX-FEDERAL STOCK NUMBER AND REFERENCE NUMBER CROSS-REFERENCE TO FIGURE AND ITEM NUMBER

Stock Number	Figure No.	Item No.
4820-462-7807	50	47
4820-483-0682	20	71
4820-554-7951	104	7
4820-554-8391	22	10
	23	32
	161	12
	161	30
4820-555-9761	159	9
4820-607-1705	142	
4820-752-9040	18	12
	27	4
4820-785-5225	40	20
4820-785-5226	40	16
4820-785-5228	42	27
4820-815-2946	111	19
4820-822-0651	162	22
4820-833-3007	146	23
4820-833-3015	54	17
4820-833-3073	54	1
4820-839-1480	138	16
4820-839-1512	138	25
4820-845-0274	51	32
4820-845-1096	2	10
	75	47
4820-849-1220	5	14
	6	1
	18	13
4820-899-5730	162	36
	163	20
4820-934-9347	56	37
4820-945-9018	138	
4820-959-7298	10	13
4820-960-3842	57	14
4820-960-3847	57	13
4935-682-5328	106	
5207-206-4044	166	32
5305-003-9471	132	6
5305-003-9476	139	4
5305-004-1575	132	5
5305-004-1579	143	1
5305-004-1589	52	11
5305-004-1590	56	47
5305-004-3172	61	1
5305-004-7239	52	31
5305-005-0836	30	8
5305-005-0837	48	25
5305-005-0838	153	7
5305-005-0840	84	37
5305-005-0845	84	1
5305-005-0847	85	30
5305-005-0848	86	2
5305-005-0850	84	5
5305-005-0853	85	20
5305-005-6037	84	28
5305-005-6042	84	13
5305-011-4366	28	31
5305-012-0233	27	1
5305-015-3006	111	24
5305-018-0129	68	9
5305-018-6289	61	5
5305-018-7069	74	1
	75	42
5305-019-0910	33	66
5305-021-3801	78	79
5305-021-3804	25	6
5305-042-9477	35	1
5305-044-4153	55	1
	63	7
	127	27
5305-045-1988	27	27
	28	1
	132	1
5305-050-1076	70	1
	70	9
5305-050-9229	83	37
5305-053-8993	27	29
	28	3
5305-054-6654	169	23
5305-054-6659	169	25
5305-054-6673	169	20
5305-059-8382	152	9
5305-059-8659	149	35
5305-059-8671	169	43
5305-068-0500	67	11
5305-068-0501	83	14
5305-068-0505	48	
5305-068-0508	33	1
	33	7
	34	7
	34	9
	34	35
	47	8
5305-068-0511	5	
	36	
	42	7
	44	1
	44	37
	61	7
	64	
	68	20
	68	27
5305-068-7837	14	12
5305-071-1767	7	22
	55	6
	75	35
5305-071-1772	18	23
5305-071-2067	65	28
5305-071-2069	70	7
5305-071-2073	69	1
	69	11
5305-071-2074	65	24
5305-071-2076	63	22
	65	20
5305-132-7815	46	19
5305-135-5136	57	1
	57	6
5305-152-0550	109	6
	140	9
5305-175-5104	46	35
5305-175-5137	46	28
5305-206-2511	152	5
5305-206-3694	20	3
5305-206-6229	33	1
5305-206-6235	65	27
5305-206-6776	39	10
	68	12
	72	30
5305-206-6786	1	1
5305-207-2240	106	2
5305-225-3840	39	3
	40	
	40	1
	40	23
5305-225-3843	4	14
	16	10
	33	
	33	7
*5305-225-8500	72	22
5305-225-8501	4	13
5305-225-8502	18	14
	18	36
	38	7
5305-225-8504	57	
5305-225-8506	34	1
	34	17
5305-225-8510	3	19
5305-235-2479	113	15
5305-247-4225	113	24
5305-253-5614	110	6
	111	11
5305-253-7863	113	18
5305-264-5925	68	34
5305-267-8975	40	6
5305-267-8980	87	9
5305-269-2801	72	5
5305-269-2802	35	12
5305-269-2804	7	
5305-269-2805	6	26
	68	17
	81	5
5305-269-2807	68	4
	78	34
5305-269-2809	78	37
	78	45

Section IV. INDEX-FEDERAL STOCK NUMBER AND REFERENCE NUMBER CROSS-REFERENCE TO FIGURE AND ITEM NUMBER

Stock Number	Figure No.	Item No.
5305-269-3208	18	7
	75	26
5305-269-3209	U27	4
5305-269-3210	2	7
	3	23
	20	45
	63	13
5305-269-3211	5	4
	7	
	38	3
	42	4
	43	1
	63	21
	75	29
	75	33
	127	10
5305-269-3214	23	44
5305-269-3216	5	10
	15	1
	65	22
5305-269-3217	2	1
	5	21
5305-269-3219	42	9
5305-269-3222	68	5
5305-269-3223	4	7
5305-272-2080	16	22
5305-273-5630	76	23
5305-274-2649	34	5
5305-276-8024	33	53
5305-276-8457	105	19
	106	1
5305-292-0913	78	74
5305-354-1227	65	5
5305-359-4381	105	1
5305-363-3582	47	20
	48	20
5305-363-8051	14	5
5305-367-1806	165	4
5305-371-5138	47	
	48	
5305-416-3967	33	28
5305-450-7499	139	16
5305-450-7500	139	14
5305-451-3487	125	1
5305-456-7065	131	6
5305-456-7198	108	4
5305-514-7632	78	10
5305-543-2419	18	18
	36	
5305-543-2753	48	18
5305-579-5818	34	13
	34	40
5305-591-2690	165	15
5305-591-2691	40	17
5305-591-[illegible]692	164	3
5305-591-9[illegible]35	61	25
5305-591-9257	77	8
	78	3
5305-614-0245	33	
5305-614-0247	47	27
	48	
	48	27
5305-614-0274	4	18
	33	
5305-622-9483	33	17
5305-637-6609	44	12
5305-639-8375	95	1
5305-646-7389	25	11
	158	11
	158	14
5305-685-3509	78	16
5305-688-2019	77	3
5305-688-2111	17	1
	17	18
	17	41
	45	
5305-701-5071	156	5
5305-701-5074	156	4
5305-701-5118	158	5
5305-702-4523	117	5
5305-710-4191	65	11
5305-710-4194	78	71

Stock Number	Figure No.	Item No.
5305-716-8128	135	1
5305-716-8183	78	65
5305-717-5467	25	3
5305-721-5298	78	6
5305-721-5322	151	2
5305-723-9384	107	5
5305-724-6798	113	5
5305-724-7210	111	16
5305-724-7212	144	15
5305-725-2317	45	1
	62	4
5305-725-4187	78	61
5305-727-8821	154	4
5305-727-8822	155	2
5305-728-0214	154	10
5305-761-4227	34	30
5305-771-9383	154	8
5305-782-9495	127	40
5305-804-8055	158	1
5305-808-9977	33	
5305-810-5543	83	44
5305-855-0968	142	24
5305-889-2910	76	6
5305-889-3002	47	12
5305-899-2109	33	56
5305-923-8268	155	6
5305-939-9187	83	29
	83	59
5305-949-9194	154	10
5305-954-8152	152	6
5305-954-8154	152	11
5305-957-2644	47	38
	48	38
5305-958-0599	33	43
5305-958-0661	125	22
5305-978-9894	144	2
5305-983-5346	111	18
5305-983-6622	111	1
5305-983-7424	144	11
5305-983-7462	144	1
5305-984-5695	76	10
5305-984-6191	48	12
5305-984-6193	47	15
	48	15
5305-988-1721	6	2
	45	4
5306-003-0684	23	31
5306-009-3895	156	23
5306-013-7902	36	
	68	8
5306-018-7715	56	5
5306-018-9691	71	9
	75	38
	75	48
5306-021-2545	42	2
5306-021-3915	169	12
	169	31
5306-143-2710	107	8
5306-155-4794	72	53
5306-166-1382	46	48
5306-174-1126	74	15
5306-206-2668	70	5
5306-207-8116	17	10
5306-225-8494	1	4
5306-225-8500	18	32
	26	3
	72	15
5306-225-9095	44	24
5306-226-4826	72	1
	72	17
	72	41
5306-226-4827	39	1
5306-226-4829	37	2
	72	33
5306-226-4844	5	15
5306-269-2798	68	7
5306-27-1966	75	21
5306-272-4250	65	3
5306-273-6337	33	83
5306-299-2367	107	1
5306-416-4153	64	6
5306-424-4052	72	13

Section IV. INDEX-FEDERAL STOCK NUMBER AND REFERENCE NUMBER CROSS-REFERENCE TO FIGURE AND ITEM NUMBER

Stock Number	Figure No.	Item No.
5306-424-7069	107	3
5306-437-4475	150	8
5306-458-2059	125	4
5306-458-2097	82	8
5306-558-8187	16	6
5306-579-1819	107	2
5306-589-3000	62	
5306-613-9396	13	1
	26	1
	33	5
	35	7
5306-623-1600	61	31
5306-637-9623	2	5
	48	
5306-638-4318	35	18
5306-638-4963	27	34
5306-672-1924	161	8
5306-702-1867	44	25
5306-775-7026	68	1
5306-785-1102	64	1
5306-815-2955	52	4
5306-826-5257	67	2
5306-833-3644	138	13
5306-835-2068	99	2
5306-835-6064	98	9
5306-870-6222	3	2
5306-937-1312	161	27
5306-940-9079	72	48
5306-959-7818	157	2
5306-980-1542	73	13
5306-989-0830	28	9
5307-003-0709	167	32
5307-206-1459	164	24
	167	40
5307-248-7333	164	20
5307-276-8119	75	17
5307-363-8059	14	6
5307-364-3246	75	25
5307-367-1809	165	28
	166	40
5307-416-4024	21	30
5307-550-1879	67	34
5307-638-5854	26	20
5307-741-1745	23	41
5307-765-4215	36	2
5307-886-3438	2	15
5307-982-8935	84	16
5310-003-1787	84	11
5310-003-6920	149	2
5310-003-6921	149	13
5310-004-5138	56	46
5310-005-6231	139	2
5310-005-8135	84	9
	85	3
	86	5
5310-005-8136	85	29
5310-006-2467	144	16
5310-012-0214	52	5
5310-012-1902	17	31
5310-012-3197	2	11
5310-012-6189	33	
5310-045-3296	47	19
	48	19
	48	28
	83	38
	83	45
5310-045-3299	48	13
5310-045-5202	169	36
5310-045-5203	169	44
5310-045-5212	169	41
5310-061-7325	87	8
5310-063-6716	33	
5310-071-3234	140	16
5310-071-3235	109	5
	140	12
5310-080-6004	39	12
	43	3
	61	4
	61	6
	63	20
	68	3
	75	28

Stock Number	Figure No.	Item No.
5310-080-6604	75	43
5310-081-4219	4	15
	72	11
5310-126-5236	108	2
5310-136-1515	57	2
	57	7
5310-136-5712	28	12
	36	3
	45	7
5310-141-3669	2	
5310-148-5171	33	
5310-151-8837	109	7
	140	3
5310-151-8839	140	12
5310-167-0803	156	22
5310-167-0809	156	11
5310-167-0820	40	9
5310-168-6360	46	42
	46	54
5310-168-6371	46	31
	46	49
5310-168-6388	46	41
	46	53
5310-168-6456	46	45
5310-184-8970	20	2
5310-184-8977	84	33
5310-189-8471	154	5
5310-193-7481	154	3
5310-193-9753	5	23
	40	18
5310-203-1111	124	23
5310-209-0786	44	13
5310-209-0965	27	28
	28	2
	61	32
	65	12
	70	2
	76	5
	78	70
	132	2
5310-209-1543	68	16
	68	25
5310-209-1827	2	21
5310-220-6583	65	4
5310-220-6765	67	1
5310-235-2585	52	18
5310-261-7340	48	
5310-262-3105	33	23
5310-262-3608	165	9
	166	26
5310-262-5429	16	4
	33	15
	33	47
5310-264-1390	152	4
5310-264-1888	34	31
5310-270-7111	66	14
5310-274-4658	68	15
	68	24
5310-274-8341	61	24
5310-274-9232	33	84
5310-274-9233	35	10
5310-275-5489	35	9
5310-276-3015	15	2
5310-281-9845	169	49
5310-282-7845	169	40
5310-297-8836	33	34
	33	54
	48	
5310-308-7429	72	43
5310-332-9562	28	27
5310-367-1799	165	8
	166	
	166	2
5310-367-1812	164	5
	165	5
5310-407-0566	71	10
5310-407-9566	1	5
	2	
	2	12
	3	20
	4	14
	5	16

Section IV. INDEX-FEDERAL STOCK NUMBER AND REFERENCE NUMBER CROSS-REFERENCE TO FIGURE AND ITEM NUMBER

Stock Number	Figure No.	Item No.
5310-407-9566	17	27
	18	15
	18	33
	18	37
	26	4
	33	
	33	29
	34	2
	34	18
	34	27
	35	19
	38	8
	39	2
	40	28
	41	2
	44	26
	52	12
	71	6
	72	10
	72	16
	72	2
	72	23
	72	34
	72	54
	75	39
	75	49
	78	9
	78	25
	78	50
	78	76
	79	7
	81	13
	81	15
	83	2
	83	9
5310-431-8884	56	1
5310-438-3690	150	3
5310-438-3691	150	2
5310-438-3693	150	7
5310-455-2801	129	4
5310-456-7172	46	43
	46	55
5310-458-2121	132	11
5310-458-2124	83	54
5310-458-2333	44	16
5310-458-2334	131	8
5310-487-5323	44	3
5310-495-6148	54	9
5310-515-9627	33	
	69	2
	69	12
5310-558-6882	165	16
	166	3
	166	14
	167	14
5310-566-0619	62	
5310-576-0546	84	32
5310-576-2544	35	2
5310-582-5965	16	9
	16	13
	26	9
	33	
	33	8
	33	18
	33	67
	34	8
	34	10
	34	36
	37	3
	40	2
	40	5
	55	13
	67	9
	67	12
	77	2
	83	13
	83	24
	161	7
5310-582-9565	33	
	33	2
5310-584-5272	7	23
	18	24

Stock Number	Figure No.	Item No.
5310-584-5272	27	30
	28	4
	55	2
	55	7
	63	8
	63	23
	65	21
	65	25
	74	4
	75	36
	78	60
	78	64
	78	80
5310-584-7888	61	26
	128	13
5310-588-8484	61	29
5310-588-8490	6	4
5310-589-1403	81	19
	81	21
5310-591-2694	164	21
	167	3
5310-591-2695	167	26
5310-591-2696	164	20
	167	2
5310-595-6509	33	57
5310-595-6711	27	22
5310-595-6852	55	4
	63	10
5310-595-7630	72	42
5310-595-8121	2	20
5310-614-3506	25	7
	25	12
5310-619-5813	154	14
5310-620-8214	145	20
5310-625-5756	97	14
	169	10
	169	30
5310-637-9541	1	2
	2	2
	3	24
	4	8
	5	5
	5	11
	5	22
	6	25
	7	
	17	2
	17	19
	17	42
	18	8
	18	19
	29	44
	27	2
	28	10
	29	12
	35	13
	36	
	36	
	38	4
	39	11
	42	3
	42	5
	42	8
	42	10
	43	2
	44	2
	44	38
	45	2
	48	
	55	10
	61	8
	61	13
	62	5
	63	14
	63	18
	64	
	65	6
	65	23
	68	2
	68	6
	68	13
	68	21

Section IV. INDEX-FEDERAL STOCK NUMBER AND REFERENCE NUMBER CROSS-REFERENCE TO FIGURE AND ITEM NUMBER

Stock Number	Figure No.	Item No.
5310-637-9541	68	28
	72	5
	72	31
	74	2
	75	27
	75	30
	75	34
	76	9
	77	7
	77	10
	78	2
	78	36
	80	11
	81	4
	81	7
	126	2
	126	16
	127	11
5310-639-4037	34	32
5310-655-9370	78	7
5310-655-9908	158	8
5310-660-2649	7	2
	8	2
	9	3
5310-660-3381	169	9
	169	29
5310-687-6358	78	8
	78	13
	78	24
	78	33
	78	41
	78	43
	78	44
	78	49
	78	54
	78	56
	78	75
	78	35
5310-691-9686	61	20
5310-691-9687	61	21
5310-722-5998	169	24
	169	26
5310-732-0558	20	43
	80	10
5310-732-0559	5	
	6	24
	7	
	29	11
	33	
	42	1
	55	9
	63	17
	81	3
	81	6
	82	7
5310-732-0560	65	26
5310-734-1739	148	1
5310-734-8905	48	
5310-734-8923	48	
5310-741-7277	142	10
5310-757-7172	53	39
5310-761-6882	161	6
5310-763-8901	154	2
5310-764-6809	151	1
	155	4
5310-768-0318	23	38
5310-768-0319	26	8
	40	4
	77	1
5310-768-0321	23	4
	156	20
	158	4
5310-770-0058	154	20
5310-782-4338	44	4
5310-785-3961	67	33
5310-786-3007	62	14
5310-809-4058	33	
	48	
5310-819-2985	152	3
5310-820-6653	27	10
	28	13
	52	2

Stock Number	Figure No.	Item No.
5310-820-6653	61	41
	75	22
5310-833-3564	93	23
5310-833-9301	138	6
5310-834-8732	70	6
5310-835-2036	78	69
5310-836-2458	76	16
5310-841-5700	73	14
5310-842-1699	20	1
5310-843-3496	109	4
	140	11
5310-849-6895	169	11
5310-850-1611	154	15
5310-853-9335	7	17
5310-880-5977	139	31
5310-880-5978	169	19
5310-880-7745	2	19
5310-880-7746	16	7
	17	26
	44	23
	72	9
	81	12
	81	14
5310-883-9385	78	30
5310-886-3069	139	38
5310-891-1733	78	59
	78	63
5310-891-1751	77	6
	77	9
	78	1
5310-891-1754	76	8
	78	73
5310-894-2520	28	26
5310-899-9151	111	17
5310-901-6836	154	9
5310-913-5475	154	6
5310-913-8881	25	1
5310-924-5897	156	10
5310-926-5880	156	21
5310-929-1807	83	25
5310-929-6395	6	15
5310-930-3948	84	2
	84	12
5310-933-8122	85	8
5310-933-8778	25	5
5310-934-9727	156	9
5310-934-9747	78	29
5310-937-0453	155	5
5310-941-6019	169	18
5310-975-2075	33	42
5310-982-4945	157	1
5310-984-7042	25	2
5310-989-5956	23	30
5315-012-4553	44	39
5315-013-7228	61	28
5315-014-1198	62	17
5315-044-3239	72	44
5315-051-9867	33	
5315-059-0119	105	11
5315-059-0491	139	37
5315-151-4374	64	5
5315-187-9370	84	7
5315-209-7977	15	23
5315-221-7229	164	28
	167	35
5315-234-1623	128	7
5315-234-1863	156	7
5315-234-1864	83	32
5315-236-8359	97	13
5315-238-0843	65	16
5315-241-7484	75	16
5315-243-1167	150	1
5315-246-9037	72	50
5315-251-9986	74	18
5315-251-9989	16	2
	17	38
5315-252-5969	68	37
5315-264-3102	105	16
5315-275-4766	15	29
5315-281-7497	44	19
5315-282-1151	44	8
5315-291-7216	154	19

Section IV. INDEX-FEDERAL STOCK NUMBER AND REFERENCE NUMBER CROSS-REFERENCE TO FIGURE AND ITEM NUMBER

Stock Number	Figure No.	Item No.
5315-301-3685	33	35
5315-363-8099	33	11
5315-367-1802	165	23
	166	35
5315-393-5865	74	10
5315-455-2765	128	5
5315-455-7118	124	3
5315-455-9992	130	10
5315-458-2132	132	24
5315-458-2133	106	10
5315-458-2134	132	19
5315-481-9827	134	7
5315-482-1588	136	1
5315-492-4340	44	32
5315-492-4342	44	31
5315-524-7660	75	14
5315-588-8493	17	37
5315-591-2697	165	21
5315-597-4217	33	
5315-597-5387	41	
5315-614-3600	146	3
5315-616-5523	98	6
5315-616-5531	65	9
5315-732-0578	125	3
5315-775-1850	34	41
5315-786-6197	14	3
5315-791-1645	42	17
5315-825-3535	106	11
5315-832-1840	148	4
5315-832-1841	148	6
5315-832-1843	136	2
5315-839-2325	16	1
	17	36
	33	
5315-839-5820	17	39
5315-842-3044	139	30
	139	34
5315-846-5928	16	19
5315-852-2336	81	1
	83	42
	83	55
5315-869-5104	134	3
5315-869-5113	56	10
5315-889-2702	150	1
5315-926-0119	166	18
5315-980-1578	62	
5315-981-1618	85	14
5315-982-1287	85	12
5315-982-1295	85	13
5315-982-1343	97	15
5315-982-1348	139	29
5315-982-1349	97	4
5315-982-1350	97	8
5315-982-1869	139	32
5315-982-1914	157	3
	157	9
5315-982-1988	166	4
5315-982-4297	84	21
5315-982-6306	84	15
5315-982-7813	157	5
5325-461-5886	153	23
5330-003-0642	149	11
5330-016-8455	53	16
5330-034-3868	147	38
5330-052-1853	52	10
	56	27
5330-052-1893	56	3
5330-052-6897	56	36
5330-064-0606	46	16
	46	18
5330-075-3439	46	15
5330-079-2113	30	2
5330-097-3248	5	
	38	6
5330-115-6135	46	51
5330-118-9147	130	3
5330-141-7875	8	8
5330-154-0664	42	35
5330-154-8358	74	6
5330-163-5432	126	
5330-168-5546	116	6
5330-171-9233	14	2

Stock Number	Figure No.	Item No.
5330-179-0053	32	
5330-185-9656	21	
5330-186-8039	150	
5330-194-3706	144	9
5330-196-5060	150	
	154	
5330-198-6179	111	6
5330-198-6190	144	8
5330-202-1981	165	26
5330-202-2770	35	20
5330-202-4061	87	
5330-222-2564	24	
	25	
	25	
5330-236-3718	159	
5330-245-9554	113	19
5330-245-9555	113	9
5330-245-9628	113	31
5330-245-9630	113	32
5330-250-5705	56	53
5330-256-0195	81	23
	81	26
5330-261-5760	21	
	22	
	154	
	160	
5330-261-5761	10	
	10	
	11	
	31	
	31	
	95	
	118	
	154	
	158	
	158	
	158	
5330-285-3444	33	44
5330-285-3825	6	5
	6	12
5330-285-7384	7	5
	8	5
	9	6
5330-290-7860	3	12
5330-290-7911	20	
	23	
	169	
	169	
	169	
5330-290-8004	42	21
5330-291-3933	118	
5330-291-9288	9	11
5330-292-0816	64	8
5330-292-3482	18	35
	18	39
5330-297-6746	2	4
5330-298-0388	61	35
5330-298-0504	18	17
5330-298-5706	2	14
5330-303-1160	65	31
	74	7
5330-323-9156	7	19
5330-328-9857	8	15
5330-361-9569	9	5
5330-364-2674	7	11
5330-367-1801	166	30
5330-368-6212	131	14
5330-368-6214	131	16
5330-368-6247	131	4
5330-400-5353	131	2
	135	19
5330-400-5580	33	24
5330-401-0864	56	50
5330-420-9635	6	20
5330-425-5142	75	46
5330-443-6112	127	41
5330-443-6114	127	6
5330-443-6124	129	2
5330-443-6126	127	20
5330-443-6127	127	9
5330-443-6128	127	13
5330-443-6130	127	30

Section IV. INDEX-FEDERAL STOCK NUMBER AND REFERENCE NUMBER CROSS-REFERENCE TO FIGURE AND ITEM NUMBER

Stock Number	Figure No.	Item No.
5330-449-6483	33	
5330-450-7483	33	22
5330-453-6561	127	32
5330-453-6564	128	9
5330-453-6570	127	33
5330-454-0493	130	14
5330-455-2683	126	21
5330-455-2684	126	22
5330-455-2685	126	25
5330-455-2686	126	23
5330-455-2694	127	22
5330-456-6966	47	32
	48	32
5330-456-6967	46	8
5330-456-6971	78	28
5330-456-7019	76	30
5330-456-7192	42	6
5330-457-6912	132	10
5330-457-6915	132	9
	133	13
	136	8
5330-457-6916	135	6
5330-457-6917	134	11
	135	4
5330-457-6932	132	8
5330-457-6937	135	2
5330-458-2054	83	16
5330-458-2055	132	15
5330-458-2056	132	16
5330-458-2057	132	14
5330-458-2058	153	9
5330-458-2084	132	21
5330-458-2085	143	3
5330-458-2086	111	5
5330-458-2087	111	7
5330-458-2088	116	4
5330-458-2129	132	26
5330-458-2130	132	30
5330-458-2221	153	18
5330-462-4121	126	
5330-462-4199	132	11
5330-491-1498	6	3
5330-505-6611	87	
	163	
5330-506-4043	142	19
5330-522-5340	8	12
5330-530-2527	4	2
5330-531-6178	42	36
5330-532-8008	33	22
5330-543-3205	19	
	154	
5330-551-0471	142	12
5330-562-1071	142	9
5330-575-5352	145	13
5330-591-2709	165	14
	166	31
5330-591-2710	164	19
	167	31
5330-592-0451	82	2
	82	6
5330-592-0452	76	11
5330-592-0454	79	9
5330-592-0455	82	4
5330-592-0456	76	13
5330-592-0457	76	31
5330-592-0458	76	17
5330-599-0505	67	26
5330-599-1616	33	82
5330-599-4823	7	14
5330-599-5433	8	10
5330-599-8112	39	4
5330-599-9112	40	24
5330-602-4314	45	6
5330-604-8094	3	5
	36	5
5330-613-9397	75	51
5330-618-2020	39	
	62	
5330-620-7359	28	33
	55	5
5330-620-9336	145	9
	146	11
5330-627-4985	6	7
5330-629-6340	3	4
5330-640-9613	144	20
5330-641-0468	14	4
5330-641-1457	34	11
	34	38
5330-650-7230	55	42
5330-650-7231	55	43
5330-657-7636	3	8
5330-663-7313	25	
5330-690-9594	146	6
	146	15
5330-695-2157	43	5
5330-724-5815	33	62
5330-736-3508	3	15
	36	15
5330-762-6018	140	11
5330-774-4058	26	5
5330-785-1059	28	5
5330-786-5320	37	5
5330-828-3563	146	17
5330-831-6561	145	14
5330-837-4010	6	16
5330-839-4909	117	
5330-841-5964	36	8
5330-842-1900	5	12
5330-861-0526	139	42
5330-883-9463	57	15
5330-887-0010	112	2
5330-892-1764	17	
5330-913-3481	132	29
5330-913-3482	132	27
5330-916-2409	126	20
5330-916-4304	167	30
5330-917-0876	110	2
5330-918-7248	132	12
5330-920-8463	140	10
5330-923-5916	149	16
5330-926-0121	149	7
5330-929-8730	30	4
5330-970-4139	56	17
	56	21
5330-970-4173	56	7
5330-970-4175	56	24
5330-973-4314	130	15
5330-974-9940	47	34
	48	34
5330-975-2278	113	25
5330-982-0562	149	8
5330-982-0660	149	14
5330-982-2634	100	
5330-982-6365	100	
5330-982-6572	54	12
	54	14
5335-231-1203	11	
5340-005-5807	157	10
5340-014-2583	16	3
	33	
	33	46
5340-050-1515	33	63
5340-054-1408	40	22
5340-134-8131	150	15
5340-200-4888	53	10
5340-200-4889	53	7
5340-212-5074	144	4
5340-229-9090	148	7
5340-232-5723	40	21
5340-237-8324	64	
	75	10
5340-251-0085	148	8
5340-262-4701	3	6
5340-281-6623	126	9
5340-262-1668	47	6
	48	6
5340-294-0600	15	17
5340-294-0617	27	15
5340-334-7180	16	17
5340-359-4042	105	18
5340-363-7294	75	40
5340-367-1808	165	11
	166	27
5340-391-3733	106	4

Section IV. INDEX-FEDERAL STOCK NUMBER AND REFERENCE NUMBER CROSS-REFERENCE TO FIGURE AND ITEM NUMBER

Stock Number	Figure No.	Item No.
5340-420-5952	33	36
5340-450-6012	139	18
5340-491-1672	139	7
5340-579-9994	106	15
5340-[illegible]70-1737	61	23
5340-597-7422	34	37
5340-672-6772	55	47
5340-740-1274	57	11
5340-770-0069	80	5
5340-770-0071	79	4
5340-785-8286	17	32
5340-788-6043	98	3
	98	5
5340-801-8731	3	7
5340-805-1398	127	25
5340-811-6643	138	1
5340-827-7615	56	26
5340-827-7618	56	16
	56	20
5340-833-3648	139	10
5340-888-8146	145	4
	146	1
5340-922-3113	148	5
5340-932-1872	56	32
5340-955-9438	124	20
5340-990-4378	124	19
5340-999-0317	33	
5355-003-0718	85	11
5355-926-2334	144	
5360-235-2466	113	26
5360-236-3774	108	5
5360-437-8792	64	
5360-443-6116	140	7
5360-443-6118	129	7
5360-443-6119	129	3
5360-458-2051	139	23
5360-459-9985	139	19
5360-674-6951	16	20
5360-734-8954	47	21
	48	21
5360-832-1709	54	16
5360-926-0117	84	24
5360-926-0118	166	12
5360-982-7723	85	9
5365-003-4116	84	29
5365-003-4145	167	9
5365-003-4160	167	11
5365-003-4161	166	11
5365-061-8710	126	4
5365-119-4777	98	2
5365-132-0203	74	19
5365-200-2606	42	16
	42	19
	42	29
5365-202-8946	8	9
5365-205-5139	33	
	33	73
5365-235-2536	52	17
5365-236-2528	52	20
5365-263-2710	42	33
5365-263-5936	62	19
5365-263-5938	62	21
5365-264-7693	58	1
5365-281-6554	35	16
5365-281-6660	33	14
5365-281-6700	44	18
5365-282-5031	66	15
5365-282-5315	127	17
5365-282-7392	62	8
5365-285-6782	44	7
5365-289-1578	5	27
5365-354-1454	75	7
5365-359-4042	106	12
5365-406-7793	108	6
5365-443-6134	126	
5365-453-6632	138	4
5365-458-2151	132	23
5365-458-2315	131	10
5365-458-2316	131	17
5365-461-5846	131	12
5365-461-5848	135	22
5365-461-5849	135	8
5365-462-4374	134	12
	135	7
5365-480-6179	146	21
5365-481-9811	136	5
5365-482-1575	146	16
5365-579-5983	3	3
5365-803-9975	130	18
5365-803-9978	130	21
5365-804-7301	79	22
5365-804-7694	64	7
5365-825-3280	113	10
5365-826-7908	130	20
5365-854-3697	134	5
5365-869-5098	135	17
5365-869-5099	137	8
5365-890-4910	137	4
5365-897-2661	58	17
5365-897-2662	52	25
5365-922-6096	137	2
5640-360-2495	24	7
5905-221-8094	153	14
5905-221-8095	153	22
5910-189-0577	156	
5920-280-3168	90	3
5920-686-9548	91	3
5930-258-5502	92	8
5930-503-1836	96	2
5930-522-1425	92	3
5930-539-7013	90	9
5930-548-7346	29	6
5930-574-2929	90	6
5930-589-5269	91	4
5930-615-9376	90	8
5930-636-2821	90	10
	91	6
5930-655-1575	93	22
5930-725-9991	90	4
5930-727-6904	96	2
5930-800-5770	91	5
5930-931-5402	84	14
5935-241-2538	92	7
5935-280-2390	92	1
5935-755-5851	92	6
5935-827-9045	53	31
5935-926-3078	92	2
5945-450-5161	54	11
5950-088-2651	53	36
5961-018-1294	46	65
5961-018-1295	46	66
5961-222-6082	46	59
5970-067-8407	46	47
5970-410-2545	46	36
5970-410-2546	46	27
5970-456-2004	46	58
5970-456-2006	46	64
5970-486-8421	47	11
	48	11
5970-496-9859	47	23
	48	23
5970-606-8321	47	
	48	
5975-156-3253	169	17
5975-202-2585	169	14
5975-202-2586	169	16
5975-296-4092	169	13
5975-296-4093	169	15
5975-583-2960	139	43
5975-682-0306	90	5
5975-808-4044	169	46
5975-985-6570	87	2
5977-116-7237	88	4
	89	4
5977-237-1596	47	14
	48	14
5977-689-6392	46	38
6115-010-2822	46	34
6135-120-1020	153	20
6145-260-8795	97	12
6210-225-9210	96	14
6210-399-7028	96	4
6210-686-4169	93	2
6210-944-1090	92	12

Section IV. INDEX-FEDERAL STOCK NUMBER AND REFERENCE NUMBER CROSS-REFERENCE TO FIGURE AND ITEM NUMBER

Stock Number	Figure No.	Item No.
6220-028-3444	96	7
6220-028-3445	96	6
6220-054-2067	96	10
	96	12
6220-062-6647	96	11
6220-782-9404	96	8
6240-155-7790	96	5
6240-155-7836	93	3
6240-155-7926	93	7
6240-155-8725	96	13
	97	3
	97	11
6240-269-0966	96	9
	156	17
6240-519-0853	96	15
6320-115-8795	153	25
6320-115-8796	153	13
6320-115-8797	153	6
6320-115-8798	153	3
6320-115-8799	153	
6320-115-8800	152	
6320-779-5923	152	8
6320-779-5924	152	12
6350-224-4945	96	16
6605-106-9560	169	1
6605-106-9562	169	2
6620-199-8730	93	14
6620-333-9253	41	
6620-377-3497	18	22
6620-494-9620	93	15
6620-570-6295	18	21
6625-404-3277	93	13
6625-404-3279	92	5
6625-832-8408	92	4
6625-983-5947	93	10
6680-019-4650	41	
6680-456-1583	93	9
6680-456-1585	41	5
6680-474-6501	41	
6680-477-6113	116	1
6680-477-6114	116	7
6680-573-5240	41	6
6680-692-3965	41	6
6680-922-0928	117	3
6685-045-3211	49	1
	50	1
6685-068-2699	108	1
	140	2
6685-087-6925	100	22
	118	45
6685-113-5440	93	11
6685-113-5441	93	12
6685-168-0835	92	9
8305-170-5382	154	
8305-170-5385	155	
	158	
9330-559-2043	95	
9510-229-4778	20	
9510-596-3564	57	
9515-238-8617	161	
9515-770-6216	154	22
9515-770-6217	154	21
9515-827-4474	95	
9520-596-1843	23	
9530-228-9231	11	
9530-233-1289	150	
9530-236-7718	139	
9530-542-2567	156	
9535-231-8256	32	
9535-866-0295	158	

Section IV. INDEX-FEDERAL STOCK NUMBER AND REFERENCE NUMBER CROSS-REFERENCE TO FIGURE AND ITEM NUMBER

Reference No.	Mfg Code	Fig No.	Item No.
ACB30A7109	01843	57	
ADB32424	02064	156	23
AN8295	91940	113	23
AN150280	88044	33	
	88044	33	88
AN6227-22	88044	111	6
AN6227-23	88044	139	21
AN6227-27	88044	144	8
AN622787	88044	144	20
AN6230-14	88044	105	7
AN6230-9	88044	81	23
AN623082	88044	144	9
AN912-8STD	81349	11	11
AN9230-9	88044	81	26
AN932U4	88044	6	22
AN960-516	88044	40	9
AN960C1216	88044	156	11
AN960C516	88044	156	22
AS32	03925	119	
	03925	120	
A01-701	91940	113	25
A01-714	91940	113	19
A01-717	91940	113	20
A010	82271	53	27
A014	82271	53	17
A016	82271	53	32
A02-302	91940	113	31
A029	82271	53	21
A030	82271	53	42
A04-402	91940	113	32
A08-187	91940	113	7
A100	84276	117	4
A1000-6-6	98660	50	10
	98660	50	23
	98660	50	40
A1000-8-8	98660	50	16
A101	76122	164	32
A1100-4-4	98660	50	44
A11018	36581	135	10
	36581	136	5
A11033	36581	133	6
A11041	36581	131	6
A112	82271	53	16
A11214	41967	161	9
	41967	162	7
A11457	41947	22	20
A115	82271	53	22
A1206	41625	76	20
A1277	41947	22	31
A132	76122	164	22
A133	76122	164	22
A1332-4-6-30	01276	102	6
A1332-8-8-21	01276	102	4
	01276	103	5
A1479	41947	21	44
A1517	49147	21	54
A1526	41947	22	22
A1530	41947	22	25
A1532	41947	21	51
A15M400	86376	85	
A1629	41947	22	29
A1633	41947	22	27
A1639	41947	22	
A1687	41947	22	34
A1689	41947	23	25
A1712	41947	21	28
A17444	41625	81	19
	41625	81	21
A17445	41625	81	18
	41625	81	2
	41625	81	22
A18001CL1ZHS	84507	150	15
A18252	41625	79	3
A18253	41625	79	14
A18254	41625	79	15
A18256	41625	79	21
A18257	41625	79	19
A18258	41625	79	
A18258-2	41625	79	18
A18258-3	41625	79	16
A18350	41625	76	26
A18351	41625	76	42
A18352	41625	76	27
A18400	41625	76	19
	41625	82	2
	41625	82	6
A18403	41625	80	19
A18404	41625	80	13
A18405	41625	80	12
A18406	41625	80	15
A18435	41625	76	36
	41625	76	40
A18578	41625	76	33
A18623-1	91940	113	15
A18639	41625	76	31
A18640	41625	80	6
A18642	41625	76	38
A18683	41625	77	4
A18684	41625	78	48
A18694	41625	81	9
A18695	41625	81	25
A18696	41625	81	8
A18697	41625	81	17
A18701	41625	81	16
A18708	41625	81	2
A18709	41625	81	10
A18710	41625	81	11
A18811	41625	79	2
A18812	41625	79	4
A18813	41625	78	11
A18816	41625	78	42
A18817	41625	78	55
A18818	41625	78	12
A18980	41625	78	20
A19087	41625	78	58
A19178	41625	78	22
A19243	41625	76	11
A19356	41625	78	28
A2000-6-6	98660	50	13
	98660	50	29
	98660	50	15
A2000C6-8	76122	165	18
A201	76122	165	27
A202	98660	50	42
A2100-4-4	98660	50	31
A2100C6-6	82271	53	3
A218	98660	50	45
A2200-4	36581	131	12
A22000	36581	134	3
A22001	36581	131	15
A22002	36581	133	2
A22006	36581	133	7
A220078	36581	131	3
A22008	36581	131	9
A22014	36581	135	5
A22017	36581	133	11
A22018	36581	133	12
A22019	36581	136	7
	36581	135	9
A22027	36581	135	10
A22029	36581	133	3
A22048	36581	133	5
A22049	36581	133	8
A22051	36581	137	6
	36581	133	9
A22053	36581	132	10
A22069	36581	132	23
A22070	36581	136	2
A22072	36581	137	7
A22073	36581	137	
A22073XC	36581	136	6
A22074	36581	136	4
A22075	36581	135	16
A22076	36581	137	4
A22077	36581	137	2
A22078	36581	137	3
A22079	36581	137	5
A22080	36581	135	21
A22085	63220	100	7
A2227	36581	132	
A228C	91940	113	9
A26-033	41947	22	30
A2663			

Section IV. INDEX-FEDERAL STOCK NUMBER AND REFERENCE NUMBER CROSS-REFERENCE TO FIGURE AND ITEM NUMBER

Reference No.	Mfg Code	Fig No.	Item No.
A27-033	91940	113	10
A27508LH	86376	84	
A27508RH	86376	84	
A29106	41625	83	11
A3000-6-6-6	98660	50	11
A30677	09608	127	30
A3163	72850	48	36
A32020	09608	127	15
A32021	096C8	127	23
A32022	906C8	127	21
A32023	09608	127	12
A32024	C96C8	127	19
A32026	09608	127	31
A32028	09608	127	5
A32029	09608	127	6
A32030	09608	127	20
A32031	056C8	127	13
A32040	41625	83	17
	41625	83	20
A32044	C96C8	128	4
A32083	09608	126	14
A32084	09608	127	9
A32089	056C8	126	10
A32090	09608	126	8
A32158	41625	83	36
A32786	41625	83	4
	41625	83	51
A32944	09608	126	24
A3378	81208	126	11
A34520	09608	127	41
A34804	056C8	126	26
A35839	096C8	128	5
A36358	41625	83	26
A37848	41625	83	27
A37850	41625	83	16
A38504	41625	83	48
A39264	41625	83	43
	41625	83	56
A39267	41625	83	22
A39268	41625	83	33
A3929	49147	21	22
A39389	41625	83	54
A39400-44	41625	83	52
A39405	41625	83	39
A39501	41625	83	18
A39502	41625	83	21
A40-11	91940	113	27
A40028	41625	83	30
	41625	83	60
A404NF	00843	93	24
A4200-6	98660	50	9
A43799	41625	83	41
A43801	41625	83	40
A4500C6-6	98660	50	28
A46106-3	41625	83	
A46110	41625	93	20
A46111	41625	93	21
A504609	91940	113	2
A505578	91940	113	23
A604L8	00843	93	5
A70C8	91940	113	28
A7009	91940	113	24
A73-820	91940	113	3
A7463	91940	113	26
A8072	91940	113	29
A8154	91940	113	30
A8212	91940	113	21
A82263	91940	113	2
A82503	91940	113	4
A82519	91940	113	14
A8253-2	91940	113	17
A82656	91940	113	13
A82801	91940	113	18
A82931	91940	113	29
A83109	91940	113	33
A8347-15	91940	113	11
A8456	91940	113	13
A8533	91940	113	22
A8586	91940	113	12
A8622	91940	113	16
A8658-12	91940	113	1
BB100060	01843	52	26
BB100211	01843	58	13
	01843	58	28
BB202674	01843	52	29
BB202850	01843	52	
BC202662	01843	52	15
BF16160H	60380	79	24
BG200603	01843	58	18
BH1312	60380	130	4
BK200429	99066	115	2
BK200740	01843	57	
BK200741	01843	57	
BK200742	01843	57	
BM2THR1177	91940	113	
BM9511S	91940	113	
BN100256	01843	56	42
BN100257	01843	56	12
BR10120H	60380	79	25
BV200567	99066	115	4
B13251	41625	83	6
B18197	41625	82	4
B18259	41625	Y9	17
B18260	41625	79	11
B18263	41625	79	9
B18354	41625	76	29
B18355	41625	76	34
	41625	76	37
B18387	41625	78	62
B18389	41625	76	17
B18407	41625	80	20
B18652	41625	80	5
B18652-2	41625	80	7
B18802	41625	78	67
B18803	41625	78	68
B18814	41625	79	13
B18815	41625	79	
B18815-3	41625	79	10
B18937	41625	78	21
B19150	41625	78	
B19150-2	41625	78	18
B19150-3	41625	78	19
B19150-4	41625	78	17
B19207	41625	76	14
B19244	41625	76	7
B2817-5	12505	128	8
B22000	36581	134	9
B22001	36581	134	6
B22003	36581	135	11
B22004X	36581	131	13
B22005	36581	134	12
	36581	135	7
B22011	36581	135	8
B22014	36581	135	14
B22015A	36581	132	3
B22040	36581	132	18
B22041	36581	132	20
B22045	36581	135	18
B22046	36581	137	1
B22047	36581	135	15
B2260-10	86376	87	7
B2260-13	86376	87	5
B2260-15	86376	87	4
B2260-9	86376	87	6
B32082	09608	126	3
B32085	09608	126	18
B35813	09608	127	7
B35829	09608	126	19
B35840	09608	128	6
B37708	41625	83	3
B37710	41625	83	35
B37842	41625	83	49
B37846	41625	83	31
B39359	41625	83	46
B39366	41625	83	57
B40040	41625	83	10
CA24-24MB	30327	100	
CB24-24BM	30327	118	
CB24-24MB	30327	118	
CB24-24PA	30327	118	
CB269X12X12	79470	51	34
CCCC419TYPE1	81348	154	
	81348	155	
CCCC419TYPE1	81348	158	

Section IV. INDEX-FEDERAL STOCK NUMBER AND REFERENCE NUMBER CROSS-REFERENCE TO FIGURE AND ITEM NUMBER

Reference No.	Mfg Code	Fig No.	Item No.
CFD50-3	02249	112	
CMD2A111	01843	52	
CMD2A221	01843	52	
CM2N02L30	62983	138	28
CM2N02R20BL30	62983	138	
CM2N02R20B30	62983	138	
CM3N02L30	62983	139	27
CM3N02R20BL30	62983	139	
CP100053	01843	57	13
CP100212	01843	58	5
CP200576	01843	59	1
CP202609	01843	56	30
CP202623-1	01843	57	16
CP202630	01843	57	9
CP202799	01843	60	1
CR39927	09608	127	32
CR39961	09608	127	33
CR5754M1	09608	128	9
CT10F10	62983	142	
C115025	82121	90	6
C1332-11	86376	87	10
	86376	87	11
C1332-14	86376	87	10
	86376	87	11
C1332-18	86376	87	11
C1332-19	86376	87	10
C1332-23	86376	87	10
C22000XC	36581	131	20
C22001	36581	134	1
C22002	36581	134	10
C22006S	36581	134	8
C22006XS	36581	134	2
C22010	36581	135	3
C22011	36581	135	12
C22012	36581	135	23
C22029XS	36581	134	
C22043	36581	132	17
C22044	36581	132	22
C22045M	36581	132	25
C22047	36581	135	23
C22053C	36581	132	28
C22057	36581	133	14
C22057XC	36581	133	
C22059	36581	136	9
C3069X8X4	79470	102	3
	88334	102	28
	88334	103	16
C3069X8X6	79470	123	5
	79470	123	9
C3109X12X8	79470	51	25
	79470	51	45
C3109X8X4	79470	51	20
C32015	09608	127	36
C32017	09608	127	35
C32018	09608	127	24
C3309X8	79470	102	20
	79470	104	11
C3509X8	79470	51	21
	79470	102	17
	79470	103	7
	79470	104	6
C35267	09608	126	28
C35796	09608	127	16
C35853	09608	127	
C3709X8	79470	51	22
	79470	102	10
	79470	103	15
	79470	104	3
C5205X4X8	79470	104	1
C5205X8	79470	51	49
C5205X8X8	79470	51	3
C5305X8	88334	104	15
C5405-6-6	79470	119	20
C5405X16X12	79470	51	33
C5405X8	79470	51	7
C5405X8X12	79470	51	27
C5405X8X8	79470	51	11
	79470	51	57
C5505X8	79470	51	4
C5506X8	79470	51	2
C5605X8X8X8	79470	51	24
C5705X8	79470	51	9
C5755X8X8X8	79470	51	29
C5955X8	79470	51	15
D8711	41625	81	24
DU1-50-6	47296	145	4
	47296	146	1
DV202720-1	01843	52	8
DV202720-2	01843	52	8
DV202966	01843	56	49
D0610A1	24785	110	
D13251	41625	76	22
D18176	41625	82	3
D18356	41625	76	24
D18408	41625	80	22
D18409	41625	80	18
D18410	41625	80	9
D18410-4	41625	80	21
D18410-5	41625	80	17
D18410-6	41625	80	14
D18663	41625	78	78
D18664	41625	78	52
D18700	41625	81	
D18700-8	41625	81	28
D18711	41625	81	20
D18714	41625	77	
D18715-2	41625	77	5
D18801	41625	78	4
D18804	41625	78	27
D18805	41625	78	32
D18866Z	41625	78	38
D19086	14625	78	66
D19208	41625	76	12
D19245	41625	76	13
D19250	41625	80	
D19250-2	41625	80	8
D19250-3	41625	80	2
D19250-4	41625	80	3
D19250-5	41625	80	1
D19317	41625	78	5
D201M2	81640	91	4
D22005XC	36581	135	
D22009X	36581	131	19
D22016	36581	132	7
D22017XEC	36581	135	
D30628	09608	128	3
D30694	09608	128	1
D32027	09608	127	29
D37770	41625	83	50
D37847	41625	83	28
D4-185	24785	143	
D608	79470	51	
D724	30327	118	
	30327	118	
D884N	98396	31	3
	98396	32	3
E18199	41625	82	
E18199-2	41625	82	1
E18199-3	41625	82	5
E18199-4	41625	82	8
E18199	41625	82	9
E1822	41625	79	8
E1823.	41625	79	27
E18247-3	41625	76	41
E18553-1	41625	77	12
E18665	41625	78	81
E18691	41625	81	29
E19247	41625	76	
E19247-1	41625	76	25
E19247-10	41625	76	32
E19247-4	41625	76	28
E19247-5	41625	76	35
E19247-6	41625	76	30
E19247-9	41625	76	21
E19248	41625	76	
E19248-10	41625	76	18
E19248-5	41625	76	15
E19249	41625	76	
E19249-2	41625	76	2
E19249-3	41625	76	1
E19249-4	41625	76	3
E37707	41625	83	61
E39092	41625	83	15
FB101	02249	108	

Section IV. INDEX-FEDERAL STOCK NUMBER AND REFERENCE NUMBER CROSS-REFERENCE TO FIGURE AND ITEM NUMBER

Reference No.	Mfg Code	Fig No.	Item No.
FEDSPECQQS633FS103	81348	107	3
FE200575	01843	59	3
	01843	60	3
FFN836GROUPTYPE3ST	81348	154	14
FFS107	81348	95	1
FFS85TYPE2STYLE10P	ADE8	68	12
FFS85TY2STYLE10P	81348	39	10
FFS85TY2STYLE10PGR	E8	72	30
FFT276TYPE2	81348	157	11
FFW84CLASSASTYLE2	81348	48	41
FFW92TYPEAGRADE1	81348	2	21
FFW92TYPEAGRADE1CL	81348	33	57
FHN23W	81349	91	2
FIG138	26403	32	9
FIG1565-2IN	79577	21	17
FIG181	72201	150	11
FIG251	45387	157	8
FIG2639	26403	32	13
FIG305	45387	157	10
FIG528	46576	20	4
FIG82ND312INLG	46576	156	6
FI1338	01843	54	4
FI1339	01843	54	6
FI1340	01843	54	3
FI1341	01843	54	7
FI200600	01843	58	9
FI202617	01843	56	35
FL202605	01843	56	4
FL202693	01843	56	52
FL202694	01843	56	51
FP7	47296	146	5
FRH300116	01843	59	
FRK300382-3A	01843	60	
FU202572-3	01843	57	11
F07A32V15A	81349	90	3
F09A250V10A	81349	91	3
FI200674	01843	52	9
F56	36581	132	4
	36581	135	24
F63	36581	135	25
F67	36581	134	13
GA100061	01843	52	24
GA100064	01843	52	22
GA100067	01843	52	10
GA100097	01843	58	20
GA100108	01843	58	25
GA100110	01843	58	27
GA100111	01843	58	22
GA100113	01843	58	7
GA100117	01843	57	12
GA100201	01843	59	2
	01843	60	2
GA100213	01843	58	10
GA100215	01843	58	12
GA100475	01843	57	15
GA1128-9	01843	57	17
GA1129-1	01843	56	17
	01843	56	21
GA1129-2	01843	56	27
GA1129-4	01843	56	36
GA1129-5	01843	56	7
GA1129-7	01843	56	24
GA1145	01843	54	12
	01843	54	14
GA202082	01843	56	50
GG200656	96906	49	1
	96906	50	1
GUN10-23	26571	101	19
GUN1000-40-24	16632	24	2
GUN20-26-27-28	26571	10	15
GUN20-29	26571	10	16
GUN20-32	26571	10	20
GUN39F38	26571	22	35
GUN3SF39	26571	22	33
GUN39P1	26571	22	13
GUN39P10	26571	22	26
GUN39P4	26571	22	32
GUN39P5	26571	22	28
GUN39P7	26571	22	23
GUN39P9	26571	22	15
GU200574	01843	59	4
G220	36581	132	9
G220	36581	133	13
	36581	136	8
G252	36581	131	2
	36581	135	19
G258	36581	132	21
G262	36581	131	16
G267	36581	132	27
G276	36581	135	6
G280	36581	134	11
	36581	135	4
G331	36581	131	11
G488	76714	93	4
HA200610	01843	58	4
HA8799-18	41625	78	51
HD2000A	72922	30	
HD2000A93A	72922	30	12
HD98A	72922	30	7
HD99A	72922	30	5
HG200570	01843	59	6
HG200598	01843	58	30
HG202597	01843	56	39
HG202620-6	01843	57	20
HG202675	01843	52	27
HG202718	01843	52	33
HG202721	01843	52	6
HG202775-1	01843	54	13
HG202803-3A	01843	60	4
HG202904-1	01843	54	18
HHG156	81348	10	
	81348	11	
	81348	20	
	81348	22	
	81348	23	
	81348	95	
	81348	158	
	81348	158	
	81348	158	
	81348	169	
	81348	169	
	81349	21	
HHG156CLASSB	81348	10	
HHG56	81348	169	
HHP106	81348	154	
HHP151CLASS230R4	81348	32	
HHP46	81348	25	
HM202656-1	01843	52	3
HM202656-2	01843	52	3
HPA300118	01843	58	
HPGD	71400	90	2
HP200624	01843	52	23
H0103	09608	147	1
H0106MOD	09608	114	1
H0117	09608	147	2
H0131	09608	147	1
h0144	09608	114	2
	09608	147	3
H117	36581	131	1
H130	36581	131	18
H18	36581	134	4
H18066	41625	76	
H18799	41625	78	
H18799-15	41625	78	46
H18799-21	41625	78	26
H18799-22	41625	78	23
H18799-25	41625	78	14
H18799-26	41625	78	53
	41625	78	40
H18799-31	41625	78	39
H18799-35	41625	78	57
H18799-36	41625	78	72
H18799-38	41625	78	31
H18799-7	41625	78	7
H18800	41625	78	
H18810	41625	79	
H18810-10	41625	79	20
H18810-2	41625	79	6
H18810-4	41625	79	26
H18810-5	41625	79	5
H18810-7	41625	79	1
H18815-2	41625	79	12
H203011U9	43334	33	85
H227	36581	133	4

Section IV. INDEX-FEDERAL STOCK NUMBER AND REFERENCE NUMBER CROSS-REFERENCE TO FIGURE AND ITEM NUMBER

Reference No.	Mfr Code	Fig No.	Item No.
H39400-45	41625	83	47
H39400-46	41625	83	58
H39400-47	41625	83	34
H39400-51	41625	83	19
H39400-61	41625	83	7
H486	36581	132	13
H488	36581	136	3
H601	36581	131	5
JMC175	75165	150	12
JS319-85	03925	104	14
JS6	03925	123	
J50	02249	104	7
KTZ02565	01843	58	
KTZ02777	01843	57	
KY3-6	01843	56	10
K130	36581	132	19
LCM8145-1847016	80064	92	13
LE202029	01843	58	3
LE721156	24956	156	1
	24956	156	2
LHCOT3	73145	97	4
LK100464	01843	58	16
LP2377-11	61112	94	3
LP3234-1	61112	94	4
LP3239-48	61112	94	2
LP657	61112	94	1
L5100G	81640	93	2
MD24-12	97418	89	2
MD24-2	97418	88	2
MF360	05160	141	2
MG1-4-12	20252	168	1
MG1-5	20252	166	2
MG1-7	20252	168	3
MI0117-2IN	16954	130	
MILA7021CLASS1	81348	25	
	81349	24	
	81349	25	
MILB5423-7TYPEB	81349	91	5
MILB857TYPEBCLASSC	81348	107	2
MILB857TYPE2GR2	81349	107	1
MILB857TYPE4STYLEA	81349	154	5
MILB857TYPE5STYLEA	81349	33	34
	81349	33	54
MILC10316CLASS1GRA	81349	24	7
MILC915-6TYPEDH03	81349	97	12
MILF1181	81349	11	17
MILF20627	81349	6	8
MILH13351TYPE2CLAS	81349	51	
MILH8794SIZE4	81349	50	
MILP8184	81348	95	
MILR3065GRADESC614	81349	163	
MILR3065GRADE614-4	81349	87	
	81349	87	
MILR880	81349	156	
MILS20166	81349	156	
MILS22698TYPE1CLAS	81349	161	
MILT2015TYPEE	81349	102	
MILT20157TYPEE	81349	51	
	81349	51	
	81349	102	
	81349	103	
	81349	104	
	81349	120	
	81349	120	
	81349	121	
	81349	121	
	81349	122	
	81349	123	
	81349	123	
	81349	157	
MILT24107	96906	20	
MILT8506COMP304	81349	118	
MIL20157TYPEE	81349	102	
	81349	120	
MK2	72201	153	
MMC16F2	98042	31	
MMC37F14	98042	21	23
MMC37F15	98042	21	42
MMC37F16	98042	21	24
MMC37F2	98042	21	16
MMC37F7	98042	21	15
MMC39-1-18	98042	24	5
MMC39-43	98042	24	3
MMC39-47	98042	24	4
MMC39-53	98042	24	6
MMC40F38	98042	19	2
MMC40F40	98042	19	4
MMC40F56	98042	19	7
MMC40M13	98042	19	5
MMC41F4	98042	10	16
MMC41F9	01276	10	1
MMC41M2	98042	10	19
MMC41M4	98042	10	17
MMC41M5	82021	10	21
MMC42-17	98042	150	8
MMC42-18	98042	150	7
MMC42M14	98042	150	12
MMC42M3	98042	150	13
MMC42M4	98042	150	10
MMC42M7	98042	150	6
MMC42M8	98042	150	2
MMC42M9	98042	150	3
MMC45-12	98042	154	13
MMC45-26	98042	154	23
MMC45M1	98042	154	1
MMC45M10	98042	154	12
MMC45M11	98042	154	7
MMC45M2M3P1P2	98042	154	26
MMC45M23	98042	154	11
MMC45M27	98042	154	20
MMC45M35	98042	154	25
MMC45M4	98042	154	24
MMC45M4P3	98042	154	17
MMC49F11	98042	159	6
MMC49F12	98042	159	7
MMC49F13	98042	159	8
MMC49F8	98042	159	2
MMC49F9	98042	159	4
MMC60-52	98042	49	5
MMC60-53	98042	49	9
MMC60-54	98042	49	10
MMC60-55	98042	49	6
MMC60-56	98042	49	4
MMC60-57	98042	49	12
MMC60-58	98042	49	2
MMC60-59	98042	49	17
MMC60-60	98042	49	16
MMC60-61	98042	49	13
MMC60-62	98042	49	3
MMC60-63	98042	49	7
MMC60-64	98042	49	15
MMC60-65	98042	49	14
MMC60-66	98042	49	8
MMC60-67	98042	49	11
MMC61-20	98042	100	1
MMC61-43	98042	100	2
MMC61PC26	98042	100	31
MMC62-13	98042	118	1
MMC62-32	98042	118	22
MMC62-33	98042	118	23
MMC62-45	98042	118	3
MMC62-46	98042	118	4
MMC62-53	98042	118	5
MMC62-54	98042	118	6
MMC62-55	98042	118	7
MMC62-56	98042	118	8
MMC62-81	98042	118	44
MMC62-82	98042	118	46
MMC62-83	98042	118	47
MMC62-84	98042	118	48
MMC62-85	98042	118	49
MMC62-87	98042	118	10
MMC62-93	98042	118	12
MMC62-95	98042	118	
MMC62023	98042	118	2
MODEL24V	01162	152	
MP75	05160	141	
MR20	92563	127	18
MR28	92563	127	26
MR3000-44-24	16632	24	2
MS122027	96906	76	16
MS15003-1	96906	17	7
	96906	45	8
	96906	45	17

Reference No.	Mfg Code	Fig No.	Item No.
MS15004-1	96906	148	3
MS15584-11	96906	96	9
	96906	156	17
MS15584-16	96906	96	5
MS15584-6	96906	96	13
	96906	97	3
	96906	97	11
MS15613-2	96906	93	7
MS15795-805	96906	169	24
	96906	169	26
MS15795-807	96906	169	19
MS15795-811	96906	139	31
MS15795-812	96906	97	14
	96906	169	10
	96906	169	30
MS15795-817	96906	25	7
	96906	25	12
MS15795-903	96906	169	36
MS15795-905	96906	169	44
MS15795-912	96906	169	41
MS16624-112	96906	130	18
MS16624-125	96906	126	9
MS16624-400	96906	127	37
MS16625-112	96906	79	22
MS16625-200	96906	64	7
MS16627-283	96906	130	20
MS16633-50	96906	138	1
MS16997-143	96906	144	1
MS16997-78	96906	111	18
MS16997-81	96906	111	1
MS16997-99	96906	144	2
MS17131-13	96906	33	25
MS17131-25	96906	52	7
MS17131-9	96906	33	77
MS17159-98	96906	96	4
MS17275	96906	93	6
MS17791	96906	92	2
MS17845YMBOL211-1	96906	96	11
MS17847SYMBOL207-2	96906	96	6
MS17847SYMBOL208-2	96906	96	7
MS17847SYMBOL214	96906	97	10
MS17847SYMBOL217-1	96906	96	10
	96906	96	12
MS17847SYMBOL218	96906	97	2
MS17847SYMBOL218-1	96906	96	8
MS19059-47	96906	145	17
	96906	146	19
MS19059-49	96906	145	16
	96906	146	18
MS19059-51	96906	56	19
	96906	56	29
	96906	56	34
	96906	58	8
MS19061-3	96906	13	13
MS19061-5	96906	42	
MS20066-304	96906	125	3
MS20365D440A	96906	169	49
MS20365D5	96906	169	40
MS20822-6	96906	55	29
MS21044D04	96906	169	11
MS21045-4	96906	87	8
MS21083N08	96906	169	18
MS21083N5	96906	169	9
	96906	169	29
MS21304-6	96906	157	1
MS21318-20	96906	110	6
	96906	111	11
MS21333-59	96906	63	2
MS24628-66	96906	97	1
MS24629-10	96906	142	24
MS24665-132	96906	16	1
	96906	17	36
	96906	33	
MS24665-134	96906	17	39
MS24665-172	96906	84	7
MS24665-283	96906	139	30
	96906	139	34
MS24665-300	96906	156	7
MS24665-302	96906	83	32
MS24665-319	96906	128	7
MS24665-370	96906	97	13
MS24665-372	96906	139	37
MS24665-423	96906	61	28
MS24665-643	96906	150	1
MS24665-644	96906	154	19
MS24665-656	96906	150	1
MS25082-5	9969	78	54
	96906	78	8
	96906	78	13
	96906	78	24
	96906	78	33
	96906	78	41
	96906	78	43
	96906	78	44
	96906	78	49
	96906	78	56
	96906	78	75
	96906	78	35
MS25237-327	96906	93	3
MS27053-8	96906	21	21
MS27183-10	96906	33	
	96906	48	
MS27183-14	72582	43	3
	96906	39	12
	96906	61	4
	96906	61	6
	96906	63	20
	96906	68	3
	96906	75	28
	96906	75	43
MS27183-21	96906	17	6
MS27183-7	96906	48	16
MS29561-210	96906	146	6
	96906	146	15
MS3102R10SL4P	96906	53	31
MS3367-2-9	96906	169	17
MS34355-159	96906	157	2
MS35059-21	96906	90	8
MS35059-22	96906	93	22
MS35059-24	96906	90	10
	96906	91	6
MS35191-318	96906	47	38
	96906	48	38
MS35198-75	96906	20	3
MS35206-242	96906	47	12
MS35206-243	96906	48	12
MS35206-245	96906	47	15
	96906	48	15
MS35206-277	96906	45	4
MS35206-315	96906	76	10
MS35207-292	96906	33	43
MS35215-52	96906	152	9
MS35215-57	96906	152	5
MS35215-59	96906	152	6
MS35215-61	96906	152	11
MS35218-16	96906	169	35
MS35218-28	96906	169	43
MS35249-142	96906	158	1
MS35265-63	96906	4	18
	96906	33	
MS35265-67	96906	83	44
MS35265-81	96906	33	17
MS35265-83	96906	33	
MS35266-61	96906	48	18
MS35266-64	96906	47	27
	96906	48	
	96906	48	27
MS35275-262	96906	83	29
	96906	83	39
MS35295-57	96906	18	7
MS35295-66	96906	5	10
MS35295-67	96906	5	21
MS35307-111	96906	78	79
MS35307-306	96906	117	5
MS35307-342	96906	25	3
MS35307-385	96906	78	6
MS35307-387	96906	76	6
MS35307-409	96906	25	11
	96906	158	11
	96906	158	14
MS35307-413	96906	25	6
MS35307-442	96906	151	2
MS35307-466	96906	155	6
MS35307-556	96906	154	16

Section IV. INDEX-FEDERAL STOCK NUMBER AND REFERENCE NUMBER CROSS-REFERENCE TO FIGURE AND ITEM NUMBER

Reference No.	Mfr Code	Fig No.	Item No.
MS35308-312	96906	77	3
MS35308-336	96906	169	12
	96906	169	31
MS35308-362	96906	78	16
MS35308-367	96906	77	8
	96906	78	3
MS35308-493	96906	154	10
MS35335-33	96906	44	13
MS35338-101	96906	20	2
MS35338-136	96906	6	15
MS35338-141	96906	25	2
MS35338-143	96906	25	5
MS35338-145	96906	155	5
MS35338-155	96906	78	30
MS35338-159	96906	85	8
MS35338-162	96906	156	21
MS35338-26	96906	52	5
	96906	52	12
MS35338-42	96906	48	13
MS35338-43	96906	47	19
	96906	48	19
	96906	48	28
	96906	83	38
	96906	83	45
MS35338-44	96906	13	8
	96906	16	9
	96906	16	13
	96906	26	9
	96906	33	
	96906	33	
	96906	33	2
	96906	33	8
	96906	33	18
	96906	33	67
	96906	34	8
	96906	34	10
	96906	34	36
	96906	37	3
	96906	40	2
	96906	40	5
	96906	55	13
	96906	67	9
	96906	67	12
	96906	77	2
	96906	83	13
	96906	83	24
	96906	161	7
MS35338-45	96906	1	5
	96906	2	
	96906	2	12
	96906	3	20
	96906	4	14
	96906	5	16
	96906	17	27
	96906	18	15
	96906	18	33
	96906	18	37
	96906	26	4
	96906	33	
	96906	33	29
	96906	34	2
	96906	34	18
	96906	34	23
	96906	34	27
	96906	35	19
	96906	38	8
	96906	39	2
	96906	40	28
	96906	41	2
	96906	44	26
	96906	71	6
	96906	71	10
	96906	72	10
	96906	72	16
	96906	72	2
	96906	72	23
	96906	72	34
	96906	72	54
	96906	75	39
	96906	75	49
	96906	78	9
	96906	78	25

Reference No.	Mfr Code	Fig No.	Item No.
MS35338-45	96906	78	50
	96906	78	76
	96906	79	7
	96906	81	13
	96906	81	15
	96906	83	2
	96906	83	9
MS35338-46	96906	1	2
	96906	2	2
	96906	3	24
	96906	4	8
	96906	5	5
	96906	5	11
	96906	5	22
	96906	6	25
	96906	7	
	96906	17	2
	96906	17	19
	96906	17	42
	96906	18	8
	96906	18	19
	96906	20	44
	96906	27	2
	96906	28	10
	96906	29	12
	96906	35	13
	96906	36	
	96906	36	
	96906	38	4
	96906	39	11
	96906	42	3
	96906	42	5
	96906	42	8
	96906	42	10
	96906	43	2
	96906	44	2
	96906	44	38
	96906	45	2
	96906	48	
	96906	61	8
	96906	61	13
	96906	62	5
	96906	63	14
	96906	63	18
	96906	64	
	96906	65	6
	96906	65	23
	96906	68	2
	96906	68	6
	96906	68	13
	96906	68	21
	96906	68	28
	96906	72	31
	96906	74	2
	96906	75	27
	96906	75	30
	96906	75	34
	96906	76	9
	96906	77	7
	96906	77	10
	96906	78	2
	96906	78	36
	96906	80	11
	96906	81	4
	96906	81	7
	96906	126	2
	96906	126	16
	96906	127	11
MS35338-47	96906	27	28
	96906	28	2
	96906	61	32
	96906	65	12
	96906	70	2
	96906	76	5
	96906	78	70
	96906	132	2
MS35338-48	96906	7	23
	96906	18	24
	96906	27	30
	96906	28	4
	96906	55	2
	96906	55	7

Section IV. INDEX-FEDERAL STOCK NUMBER AND REFERENCE NUMBER CROSS-REFERENCE TO FIGURE AND ITEM NUMBER

Reference No.	Mfg Code	Fig No.	Item No.
MS35338-48	96906	63	8
	96906	63	23
	96906	65	21
	96906	65	25
	96906	70	8
	96906	74	4
	96906	75	36
	96906	78	60
	96906	78	64
	96906	78	80
MS35338-50	96906	27	10
	96906	28	13
	96906	52	2
	96906	61	41
MS35338-51	96906	128	13
MS35338-54	96906	154	15
MS35338-8	96906	48	
MS35338-98	96906	84	33
MS35338-99	96906	84	32
MS35340-47	96906	78	7
MS35461-36	96906	76	23
MS35648-12	96906	40	22
MS35648-6	96906	40	21
MS35649-262	96906	78	29
MS35650-106	96906	152	3
MS35671-24	96906	16	19
	96906	17	14
MS35690-424	96906	7	2
	96906	8	2
	96906	9	3
MS35690-805	96906	48	9
	96906	48	42
MS35691-18	96906	76	8
	96906	78	73
MS35691-19	96906	23	30
MS35691-21	96906	33	42
MS35691-29	96906	78	69
MS35691-32	96906	77	6
	96906	77	9
	96906	78	1
MS35691-33	96906	70	6
MS35691-38	96906	78	59
	96906	78	63
MS35691-4	96906	20	1
MS35691-525	96906	7	17
MS35691-59	96906	156	9
MS35691-805	96906	48	7
	96906	48	40
MS35756-11	96906	98	6
MS35756-17	96906	44	39
MS35756-24	96906	65	9
MS35758-8	96906	164	14
	96906	165	17
MS35769-18	96906	72	58
MS35782-4	96906	18	12
	96906	27	4
MS35782-5	96906	5	14
	96906	6	1
	96906	18	13
MS35782-6	96906	26	7
MS35783-2	96906	2	10
	96906	75	47
MS35785-4	96906	22	10
MS35842-11	96906	2	
	96906	19	6
	96906	20	14
	96906	23	1
	96906	23	14
	96906	29	1
	96906	87	1
MS35842-12	96906	11	12
	96906	20	32
	96906	21	1
	96906	22	1
	96906	22	5
	96906	23	5
	96906	161	18
	96906	162	2
	96906	162	13
	96906	162	26
MS35842-13	96906	18	1
	96906	18	4

Reference No.	Mfg Code	Fig No.	Item No.
MS35842-13	96906	19	3
	96906	21	5
	96906	159	3
	96906	160	3
	96906	161	1
MS35842-14	96906	5	1
	96906	5	8
	96906	11	5
	96906	19	1
	96906	20	49
	96906	20	62
	96906	21	9
	96906	21	13
	96906	22	7
	96906	23	26
	96906	29	8
	96906	31	1
	96906	32	6
	96906	38	1
	96906	159	1
	96906	160	5
MS35842-15	96906	10	18
	96906	20	5
	96906	160	1
MS35842-16	96906	24	1
	96906	25	9
	96906	118	11
MS39158-7	96906	21	12
MS39166-7	96906	21	11
MS39230-4	96906	71	2
MS39243-25	96906	46	1
MS39256-2855	96906	46	1
MS39256851	96906	46	1
MS39256858	96906	165	1
MS45901-4	96906	152	4
MS49005-8	96906	29	10
	96906	63	27
	96906	71	1
	96906	75	12
MS51922-22	96906	83	25
MS51957-30	96906	169	23
MS51957-35	96906	169	25
MS51957-48	96906	169	20
MS51957-63	96906	83	37
MS51959-61	96906	156	5
MS51959-63	96906	156	4
MS51959-67	96906	158	5
MS51961-3	96906	52	14
	96906	56	8
MS51963-147	96906	111	16
MS51963-66	96906	107	5
MS51964-49	96906	113	5
MS51967-11TYPE2STY	1GRAD	76	4
MS51967-13	96906	111	17
MS51967-14	96906	23	38
MS51967-2	96906	161	6
MS51967-8	96906	20	43
	96906	80	10
MS51968-11	96906	2	19
MS51968-2	96906	17	31
	96906	40	4
	96906	77	1
MS51968-23	96906	154	2
MS51968-5	96906	17	26
	96906	44	23
	96906	81	12
	96906	81	14
MS51968-8	96906	5	
	96906	6	24
	96906	7	
	96906	29	11
	96906	33	
	96906	42	1
	96906	55	9
	96906	63	17
	96906	81	3
	96906	81	6
	96906	82	7
MS51969-7	96906	154	6
MS51971-3	96906	25	1
MS51971-5	96906	25	4
	96906	156	20

Reference No.	Mfr Code	Fig No.	Item No.
MS51971-5	96906	158	4
MS51971-7	96906	151	1
	96906	155	4
MS51971-8	96906	156	10
MS51972-10	96906	148	1
MS51972-8	96906	154	9
MS75059	96906	153	20
MS90725-109	96906	127	27
MS90725-110	96906	7	22
	96906	55	6
	96906	75	35
MS90725-111	96906	127	40
MS90725-112	96906	27	29
	96906	28	3
MS90725-117	96906	135	1
MS90725-119	96906	18	23
MS90725-3	96906	67	11
MS90725-35	96906	18	32
	96906	26	3
	96906	72	15
	96906	72	22
MS90725-37	96906	4	13
MS90725-38	96906	18	14
	96906	18	36
	96906	38	7
MS90725-40	96906	57	
MS90725-42	96906	34	1
	96906	34	17
MS90725-46	96906	3	19
MS90725-5	96906	83	14
MS90725-57	96906	75	26
MS90725-58	96906	U27	4
MS90725-59	96906	2	7
	96906	3	23
	96906	20	45
	96906	63	13
MS90725-60	96906	5	4
	96906	7	
	96906	38	3
	96906	42	4
	96906	43	1
	96906	63	21
	96906	75	29
	96906	75	33
	96906	127	10
	96906	23	44
MS90725-64	96906	15	1
MS90725-66	96906	65	22
	96906	2	1
MS90725-67	96906	42	9
MS90725-69	96906	39	3
MS90725-7	96906	40	
	96906	40	1
	96906	40	23
	96906	68	5
MS90725-72	96906	4	7
MS90725-73	96906	27	27
MS90725-87	96906	28	1
	96906	132	1
	96906	70	1
MS90725-89	96906	70	9
	96906	34	30
MS90726-111	96906	78	61
MS90726-114	96906	78	65
MS90726-116	96906	87	9
MS90726-14	96906	154	4
MS90726-192	96906	155	2
MS90726-193	96906	44	24
MS90726-40	96906	48	
MS90726-5	96906	68	7
MS90726-55	96906	72	5
MS90726-58	96906	72	5
	96906	35	12
MS90726-59	96906	6	26
MS90726-62	96906	68	17
	96906	81	5
	96906	68	4
MS90726-64	96906	78	34
	96906	78	37
MS90726-66	96906	78	45
	96906	65	11
MS90726-86	96906	78	71
MS90726-89			

Reference No.	Mfr Code	Fig No.	Item No.
MS90726-9	96906	40	6
MS90728-111	96906	65	28
MS90728-113	96906	70	7
MS90728-117	96906	69	1
	96906	69	11
MS90728-118	96906	65	24
MS90728-120	96906	63	22
	96906	65	20
MS90728-33	96906	72	1
	96906	72	17
	96906	72	41
MS90728-34	96906	39	1
MS90728-36	96906	37	2
	96906	72	33
MS90728-5	96906	16	12
MS90728-51	96906	5	15
MS90728-6	96906	33	1
	96906	33	7
	96906	34	7
	96906	34	9
	96906	67	8
MS90728-61	96906	18	18
	96906	36	
MS90728-62	96906	5	
	96906	36	
	96906	42	7
	96906	44	37
	96906	61	7
	96906	64	
	96906	68	20
	96906	68	27
MS90728-63	96906	17	1
	96906	17	18
	96906	45	
MS90728-64	96906	45	1
	96906	62	4
MS90728-8	96906	6	14
	96906	16	10
	96906	33	
	96906	33	7
MS9245-45	96906	81	1
	96906	83	42
	96906	83	55
M108	76122	164	30
M11554	74400	96	3
M15126	41947	21	55
M1670	74400	96	2
M179	36581	135	13
M181	36581	135	13
M19622-1-001	81349	169	13
M19622-1-002	81349	169	15
M19622-16-0006	81349	169	14
M19622-17-01	81349	169	16
M19622-3-002	81349	169	46
M28224	76122	166	
M35816	09608	127	
M35818	09608	126	
M35819	09608	128	2
M6-1	97418	88	3
	97418	89	3
M7-3	97418	88	4
	97418	89	4
M90726-191	96906	154	10
NATIVE	76528	150	14
NC3030	97539	90	5
NF8401	02249	140	
NO250-1-2	14959	21	7
NO4AUDELBLDC170CRE	90173	139	29
NP200549	01843	52	32
NP202634	01843	57	19
NT5-10CA	01843	56	46
NT6-16CA	01843	56	1
N10308	97539	90	9
N18	36581	131	8
N30308	97539	91	7
PATTERNDFMO-5000	38508	95	4
	38508	95	5
PATTERNDRMO-5000	38508	95	8
PC200602	01843	58	23
PC202613	01843	56	22
PD10-101	74163	161	17
PD10-480	74163	161	31

Section IV. INDEX-FEDERAL STOCK NUMBER AND REFERENCE NUMBER CROSS-REFERENCE TO FIGURE AND ITEM NUMBER

Reference No.	Mfr Code	Fig No.	Item No.
PD10-480-2X2X1-2IN	74163	161	13
PD15-101-2IN	74163	162	23
PD15-154	74163	162	44
PD15-235-2-1-2IN	74163	162	25
	74163	163	6
PD15-235-2IN	74163	161	16
PD15-242	74163	161	11
PD15-272-1-1-2IN	74163	161	21
PD15101-2-1-2IN	74163	162	29
	74163	163	19
PF10-8-6	98660	50	20
PF10L6-3	98660	50	26
PF10L6-3INLG	98660	50	32
PF10L6-4INLG	98660	50	24
PF10L8-3INLG	98660	50	18
PF101-12-6	98660	50	12
PF132	70040	3	11
PF201-4	98660	50	41
PF201-6	98660	50	33
PF201-8-6	98660	50	39
PF21-6-4	98660	50	27
PF3010-4	98660	50	43
PF3010-6	98660	50	30
PF3011-8	98660	50	17
PF31-6	98660	50	25
PF4200	02249	120	3
PG100137	01843	56	44
PG200604	01843	58	24
202608	01843	56	26
'02614	01843	56	16
	01843	56	20
.. 628	99066	115	6
PG764	01843	58	15
PL202625	01843	57	3
	01843	57	8
PL202664	01843	52	13
PL202673	01843	52	30
PL202905	01843	54	10
PMH	03925	119	
PMN20	03925	119	
	03925	120	
	03925	121	
	03925	122	
PM20	03925	120	
PM32	03925	119	
	03925	120	
PM326-8-8S	03925	104	8
PM4	03925	119	
	03925	119	
PM6	03925	123	
PM8	03925	123	
PN1252	01843	52	28
PN202028	01843	58	2
PT202606	01843	56	14
PT202627	01843	57	18
PT202661	01843	52	16
P227	36581	136	1
P233	36581	134	7
P235	36581	132	24
P241	36581	133	1
QQA200-5	81348	156	
	81348	156	
QQA225-8	81348	139	
QQA250-7	81348	158	
QQB637	81348	11	
QQC576	81348	32	
QQS633FS1010	81348	78	10
QQS634COMPC1045	81348	20	
QQS698	81348	95	
	81348	151	
	81348	151	4
QQS741	81348	23	
QQS763CLASS304	81348	156	
QQS766	81348	23	21
QQT830	81348	51	
QQT830ASEAMLESSCDS	81348	163	
QQT830SEAMLESS	81348	51	
	81349	51	
RA1	01162	152	8
RA11	01162	152	2
RA12	01162	152	1
RA2	01162	152	12
RA20	01162	152	7
RA6	01162	152	10
RBL1-100	01276	11	
RF8401-2	02249	140	
RF8403-2	02249	140	
RG100036	01843	52	25
RG100102	01843	58	17
RG100155	01843	57	10
RG100157	01843	56	23
	01843	56	25
RG100207	01843	58	21
RG100208	01843	58	19
RG100209	01843	58	26
RG100214	01843	58	11
RG100465	01843	58	1
RG1098	01843	56	15
RG1103	01843	52	17
RG1104	01843	52	20
RG202624-1	01843	57	5
RG202624-2	01843	57	4
RPA300412	01843	56	
RPA308090A	01843	56	
RRC271CLASS7	81348	139	
RRC271CLASS8	81348	10	
	81348	11	
RRW0410TYPE1CLASS	81348	157	
RRW360	81348	11	
	81348	32	
R120	36581	131	17
R1441	79665	150	5
R21	36581	131	10
R258	36581	134	5
R290	36581	135	22
R49	36581	137	8
R90	36581	135	17
SA2-185BITK44	24735	144	
SA2-185D	24785	144	
SA20	03925	122	
SA45A	03925	122	
SA5-175CK44	24785	111	
SCA3	96151	98	1
SCC3	96151	98	1
SC100196	01843	52	4
SC100251	01843	52	11
SC150-3CA	01843	52	31
SC1618	01843	56	5
SC1627	01843	54	8
SC200968	01843	58	6
SC2023	01843	57	1
	01843	57	6
SC202610	01843	56	31
SC2046	01843	56	47
SC2096	01843	56	45
SEAGULLTYPE1LH	72201	150	4
SEAGULLTYPE1RH	72201	150	4
SE100082	01843	56	3
SE1047	01843	56	53
SF1012-8-8	03925	102	2
SF1025-6-8	03925	103	36
SF1094-8-8	03925	51	53
SF211-4	03925	102	
SF211-8	03925	102	
	03925	103	
	03925	103	
	03925	104	
SF215	02249	109	1
SH202594	01843	56	11
SH202724	01843	52	21
SN200568	99066	115	5
SP1311	24785	144	
SP200605	01843	58	14
	01843	58	29
SP202109	01843	59	5
SP202607	01843	56	18
SP202615	01843	56	38
SP202663	01843	52	19
SP202702	01843	56	28
SP202763	01843	54	16
SP280	24785	144	16
SP292611	01843	56	32
SP574	24785	144	11
SP795	24785	144	15

Section IV. INDEX-FEDERAL STOCK NUMBER AND REFERENCE NUMBER CROSS-REFERENCE TO FIGURE AND ITEM NUMBER

Reference No.	Mfr Code	Fig No.	Item No.
STYLEKS	72661	11	7
	72661	11	9
SV202601	01843	56	41
S10416M616-616-28	79470	51	32
S14-08452	91940	130	
S45A20	03925	119	
S75	72922	30	1
S7720COMPOSITION30	81349	97	
S82A	72922	30	3
S845	36581	132	6
S846	36581	132	5
S88B	72922	30	6
S90A20	03925	119	
TEMPMAT2-1-2IN	08869	24	7
TK200588	99066	115	1
TK200593	99066	115	3
TR605TYPEMCLASS2	81348	97	
TU202909	01843	54	2
TYPE43C10FT	41625	93	19
TYPE43C11FT	41625	93	18
TYPE43C12FT	41625	93	17
TYPE43C13FT	41625	93	16
TYPE43UC11FT	41625	92	11
TYPE43UC13FT	41625	92	10
TYPE43UC15FT	41625	92	10
TYPE43UC9FT	41625	92	11
TYPE5DFM2-1-2IN	38508	92	9
TYPE5PATDMF	38508	100	22
	38508	118	45
TY27M	59730	87	2
UE2-01	96151	98	
U124	30327	100	
U171	36581	131	4
U175	36581	131	14
U205	36581	132	16
U208	36581	132	15
U209	36581	132	14
U211	36581	132	11
U212	36581	132	12
VA200932	01843	57	14
VA202616	01843	56	37
VA202836	01843	54	17
VA202906	01843	54	11
VA202908	01843	54	5
VB202762	01843	54	15
VCA300378	99066	50	47
VCA300403-1	01843	54	1
VDB	72922	30	11
VD2502	72922	30	9
VD3	72922	30	8
VS202602	01843	56	40
	01843	56	43
VS202612	01843	56	33
V110-25-1C10LS214	62983	106	
V110-25-1C10S21	62983	106	
V210-5-1C12LS85	62983	105	
V210-5-1C12S85	62983	105	
V63-6-4P	91940	113	8
WA1-17CA	01843	56	2
WA1933	01843	56	9
	01843	56	13
WA1949	06481	52	18
WA5-10CA	01843	56	6
WA5-8CA	01843	54	9
WA6-10CA	01843	56	48
WA6-16	01843	57	2
	01843	57	7
WK2-11	96151	98	
WWF24-19-1030	05890	156	3
WWN351	81348	12	2
	81348	103	18
	81348	103	42
	81349	103	4
WWN351TYPE1	81348	11	14
	81348	20	41
	81348	21	36
	81348	23	
	81348	23	36
	81348	21	52
WWN351TYPE2	81348	20	
WWP351CLASS1	81348	21	
	81348	21	

Reference No.	Mfr Code	Fig No.	Item No.
WWP351CLASS1	81348	22	19
	81348	23	
	81348	23	
WWP351GRADEASTD	81348	21	
WWP351SPECCLASS1	81348	162	
WWP351TYPE1	81348	22	
WWP377	81348	12	
	81348	20	
	81348	20	
	81348	23	
	81348	23	
	81348	23	
	81348	23	
	81348	23	
	81348	32	
WWP404CLASSA53AERW	81348	23	
WWP404GRADEA	81348	169	
	81348	161	
WWP404GRADEACLASSA	81348	163	
WWP404GRADEBCLASSA	81438	162	
WWP4040GRADEACLASS	81348	11	28
WWP460CLASSA	81348	12	5
	81348	21	61
	81348	23	35
	81348	23	29
WWP460CLASSB	81348	21	39
WWP471ATYPE1CLASS1	81348	21	32
WWP501TYPE1CLASSA	81348	103	39
WWP521	81348	103	41
	81348	169	47
WWP521-1-2IN	81348	21	38
WWP521TYPE1	81348	162	
WWP799TYPEKFORM1	81348	11	24
WWT351TYPE1	81348	21	
WWT755	81348	23	
WWT791GRADE3TYPEB	81348	11	
WWT799	81348	22	
WWT799A	81348	21	
WWT799CLASS1	81348	22	
	81348	22	
	81348	22	
WWT799TYPECLASS1	81348	161	
WWT799TYPEK	81348	11	
	81348	21	
	81348	22	
WWT799TYPEKCLASS1	81348	161	
	81348	162	
WWT799TYPEKCLASS2	81348	21	
	81348	21	
	81348	161	
	81348	161	
	81348	162	
WWT799TYPEKFORM1	81348	21	
	81348	162	
	81348	163	
	81438	163	
	09608	126	
W0951	41947	22	24
W1049	41947	21	43
W1069	41967	162	10
W1178	41947	21	11
W1187	41947	21	40
W1287	36581	131	7
W14	36581	135	2
W141	41947	22	36
W1739	41947	21	53
W2034	41947	21	25
W2085	41947	21	27
W2086	41947	21	20
W2334	41947	21	26
W40110	41947	21	47
W4098	41947	21	45
W9088	82271	53	23
X5133-21H	81348	5	2
ZZH428	81348	10	
ZZH428CLASS2TYPE3G	81348	22	
ZZH428TYPE1CLASS2G	81348	38	
ZZH428TYPE1CLASS1G	81348	22	
ZZH428TYPE1CLASS2G	81348	22	
ZZH428TYPE1GRADE	81348	162	
ZZH428TYPE1GRADEAC	81348	23	
	81348	118	

Reference No.	Mfr Code	Fig No.	Item No.
ZZH428TYPE1GRADEBC	81348	20	
	81348	20	
	81348	23	
ZZH428TYPE2CLASS1G	81348	22	
ZZH428TYPE2GRADEAC	81348	20	
	81348	20	
ZZH428TYPE2GRADEBC	81348	23	
	81348	23	
	81348	23	
	81348	32	
	81348	161	
	81348	161	
	81348	162	
ZZH428TYPE3GRADEBC	81348	161	
	81348	162	
	81348	163	
Z220	36581	132	8
Z267	36581	132	26
Z270	36581	132	30
0102-8-6	08752	101	14
	08752	103	25
015	02249	112	8
	02249	140	1
02508A108	79470	51	
025C8A108668-44	79470	51	17
02508A608	79470	51	
	79470	51	
02508A6C8608-30	79470	51	23
02508A608608-36	79470	51	26
02508A608608-75	79470	51	14
02508A668	79470	51	
02508A860	79470	51	
034-21383	16954	130	7
034-21396	16954	130	9
034-21849	16954	130	6
034-24179	16954	130	2
034-24184	16954	130	13
034-24311	16954	130	22
034-24313	16954	130	25
034-24326	16954	130	23
034-24478	16954	130	8
05166	13800	6	23
1	14959	49	19
	14959	51	52
	14959	162	36
	14959	163	20
1-1-4INCLOSE	14959	122	9
1-1-4X1-1-2IN	14959	120	17
1-13	07988	129	2
1-2-411YB	98991	130	
1-2INIPSX2INLG	63686	51	46
1-2INIPSX3AND1-2IN	63686	51	19
1-2INX2INLG	14959	123	3
1-2IN2000L8W06	14959	102	15
1-2IN2002BW06	14959	103	26
1-2IN300L8	14959	103	23
1-2X38IN	14959	123	21
1-2444BSE	98991	100	30
	98991	123	2
1-4SHPS	24835	100	29
1-54	31211	46	66
1-55	31211	46	67
1-56	31211	46	59
1-8INX1INLG	14959	163	2
1-84	31211	46	67
1-85	31211	46	66
1-86	31211	46	59
1CM3D3	989C5	96	16
1HF2-209	26571	22	11
1INIPSFX1INTUBE	14959	21	3
10	72922	30	4
10-00159-02	24785	110	3
	24785	111	8
10-00329-02	24785	143	4
	24785	144	4
10-00855-02	24785	144	18
10-C0921-02	24785	111	9
10-C0922-02	24785	110	5
10-C0941-02	24785	143	5
	24785	144	5
10-00942-02	24785	144	10
10-00961-02	24785	144	13
10-01243-03	24785	111	25
10-01245-04	24785	111	22
10-01246-03	24785	111	2
10-01256-02	24785	111	19
10-01258-02	24785	111	10
10-01811-02	24785	144	12
10-01945-02	24785	144	18
10-02057-02	24785	144	22
10-02059-02	24785	144	3
10-02523-02	24785	144	7
10-02632-02	24785	111	13
10-02678-02	24785	144	19
10-02693-02	24785	111	20
10-02703-02	24785	143	2
10-02774-02	24785	110	1
10-02846-02	24785	111	21
	24785	144	17
10-04037-05	24785	143	6
10-04438-08	24785	111	15
	24785	144	
10-04441-05	24785	110	4
10-05139-03	24785	110	7
	24785	110	8
10-06427-04	24785	111	23
10-06601-01	24785	111	4
10-06601-03	24785	144	21
10-07524-04	24785	111	12
10-07895-06	24785	110	9
10-22010-11	24785	144	21
10-6CBTX5	08752	100	3
10-90	31211	46	
10EBTXS	08752	100	12
100X8	79470	10	2
1000-1-0	47296	145	2
	47296	146	4
1000-13-0	47296	145	1
	47296	146	3
1000-14-6	47296	145	10
1000-14-8	47296	146	13
1000-15L	47296	146	7
1000-15S	47296	145	5
1000-17-0	47296	145	20
1000-17-8	47296	146	22
1000-18-0	47296	145	8
1000-18-8	47296	146	10
1000-2-0	47296	145	3
	47296	146	2
1000-22-0	47296	145	19
	47296	146	21
1000-23-0	47296	145	18
	47296	146	20
1000-24-0	47296	145	15
1000-24-8	47296	146	23
1000-25-8	47296	146	17
1000-3-0	47296	145	21
1000-4-0	47296	145	7
1000-4-8	47296	146	12
1000-5-0	47296	145	6
	47296	146	8
1000-6-0	47296	145	9
	47296	146	11
1000-9-6	47296	145	11
1000-9-8	47296	146	14
100014	72582	17	10
100015	72582	17	28
100158	72582	55	1
	72582	63	7
101075	72582	27	5
	72582	27	6
1012-6-8	03925	101	9
1012-8-8	03925	101	8
1013-32-32	03925	119	18
	03925	120	23
10211178-3	18876	84	2
	18876	84	12
1024MWSH	91435	24	5
1025-4-6	03925	50	35
1025-6-4	03925	101	17
1025-6-8	03925	101	4
103326	72582	61	26
1037-4-4	03925	119	13
1037-8-8	03925	123	6

Section IV. INDEX-FEDERAL STOCK NUMBER AND REFERENCE NUMBER CROSS-REFERENCE TO FIGURE AND ITEM NUMBER

Reference No.	Mfg Code	Fig No.	Item No.
103709	72582	13	21
103868	72582	7	8
103877	72582	40	
	72582	75	3
103905	72582	17	4
	72582	17	21
	72582	72	51
	72582	138	15
1050	72582	75	44
105451	62983	142	17
105680	08752	100	13
106FBTXS	62983	142	23
106020	62983	142	18
106610	72582	74	10
106751	72582	1	4
106973	62983	139	16
1071	72582	74	1
108608	72582	75	42
	72582	64	
108687	76122	164	26
109A	03925	101	18
1093-8-6	03925	101	7
1094-8-8	62983	105	18
109975	62983	106	12
	31211	46	51
11-10	31211	46	15
11-11	50465	149	1
11-2L1K10X1-2	31211	46	51
11-26	31211	46	14
11-31	31211	46	17
11-34	31211	46	22
11-39	31211	46	14
11-47	31211	46	16
11-5	31211	46	18
	31211	46	17
11-6	31211	46	8
11-8	86376	85	30
1103	81371	7	4
11069	81321	8	4
	81321	9	5
	72582	55	10
110730	16764	47	
1108850	16764	48	
1108890	79470	21	
1110X10	82271	53	26
111422-1	82271	53	24
111423-1	82271	53	25
111437	62983	142	1
1115	62983	125	4
11173	72582	48	
1118092	76122	164	20
112	48422	23	32
1121	48422	161	12
	48422	161	30
	82271	53	20
112138	82271	53	28
112139	82271	53	43
112140	82271	53	41
112141	82271	53	39
112148	81321	8	12
11217	82271	53	15
112224	82271	53	18
112225	82271	53	2
112332	82271	53	44
112333	62983	138	22
112694	86376	84	9
1128	86376	85	3
	86376	86	5
113-1-3-8IN	14959	21	59
113000	62983	105	3
113175	72582	2	
	72582	18	29
113177	72582	18	31
113500	72582	33	
113740	21450	21	18
114139	62983	105	5
114173	62983	105	8
114351	72582	44	12
114366	72582	28	6
	72582	28	31
1144	86376	84	3
1145	86376	84	4

Reference No.	Mfg Code	Fig No.	Item No.
114622	72582	33	44
114691	62983	142	2
115	76122	164	33
1153	86376	84	6
1160	86376	84	16
116644	62983	105	15
117-1-1-2	14959	21	35
117051	72582	65	26
117296	72582	34	13
	72582	34	40
118753	72582	55	28
118755	72582	55	35
118831	16764	47	
	16764	48	
119	76122	164	12
119375	62983	105	12
119982	62983	125	20
12-10	31211	46	23
12-18	31211	46	23
12-22	31211	46	21
12-4TRBTXS	08752	100	26
12-8CBTXS	45681	100	11
12-8CTX	08752	101	12
	08752	103	38
12-8FBTXS	08752	100	15
12-9	31211	46	21
12CBTXS	08752	118	32
12EBTXS	08752	100	19
	08752	118	33
12FBTLS	08752	100	17
12FC24	97418	89	
12HBTXS	08752	118	51
120033	98042	90	7
12005ARHSTBDCW	72582	75	
12006ALHPORTCCW	72582	75	
120128	62983	124	20
120217	72582	33	
120233	72582	27	1
120393	72582	4	15
	72582	34	24
	72582	34	28
	72582	72	11
120428	72582	42	24
	72582	42	26
121-2	14959	159	15
1211	86376	86	2
1211-3-4IN	26403	11	15
1217	86376	84	5
1218	86376	85	10
121902	72582	26	8
121912	72582	17	34
121917	72582	72	9
122161	72582	48	
122366	72582	28	12
	72582	36	3
123197	72582	45	7
	72582	2	
1232-3	72582	2	11
124264	78189	154	3
124735	62983	142	4
1248	62983	142	3
125-4510928-38	62983	138	13
125-4510928-39	80064	97	16
125-4510928-45	80064	97	9
125-4510928-48	80064	97	5
125-4510928-64	80064	97	17
125THX125TH	80064	97	6
12501-2	91940	113	6
126	14959	19	10
	83676	85	18
126189	83676	85	22
127	86376	85	7
	86376	85	24
1270	72582	33	
1272	86376	85	4
1273	86376	85	23
	62983	139	14
1276A	62983	139	4
128	62983	105	19
	62983	106	1
	62983	106	2
	76122	164	28

Section IV. INDEX-FEDERAL STOCK NUMBER AND REFERENCE NUMBER CROSS-REFERENCE TO FIGURE AND ITEM NUMBER

Reference No.	Mfg Code	Fig No.	Item No.
129	76122	164	31
129343	62983	105	2
13-13	31211	46	68
13-749-208	26571	24	6
1303-2	14959	19	9
130311-2	14959	159	10
13032	14959	159	11
13033-4	14959	19	12
130728	62983	142	11
130729	62983	142	8
130730	62983	142	6
130735	62983	142	10
131038	62983	139	25
13113-8IN	14959	21	
131375	72582	6	2
131485	62983	105	1
132	76122	167	
132011-2	14959	159	12
13202	14959	159	13
132021-2	14959	159	14
132046	72582	33	
13207E2025-1	97403	92	12
13291	81321	8	15
133	86376	85	20
13566	81321	8	11
136	76122	164	8
1369	86376	85	12
137-1-1-4IN	26403	120	1
137-3-8X2IN	26403	23	31
137405	72582	33	
137406	72582	13	5
137422	72582	75	20
137425	72582	63	4
137894	72582	10	14
138	26403	162	4
138-1-1-2IN	26403	23	
138-1IN	26403	23	
138-2-1-2IN	26403	163	3
1380	14959	120	14
	14959	121	4
	14959	122	6
1381-3-8IN	14959	123	15
13811-1-4IN	14959	123	25
138234	14959	120	10
1383	72582	34	5
	14959	120	12
138414	14959	122	10
1386	72582	61	25
	14959	120	19
	14959	122	18
139	86376	84	8
139013	76122	167	2
14-38	72582	33	62
14-39	31211	46	69
14-40	31211	46	13
14092	31211	46	33
	96151	98	3
14113-1	96151	98	5
	81321	8	1
141195	81321	9	2
	72582	13	10
	72582	33	12
	72582	33	21
	72582	33	45
141198	72582	62	17
141393	62983	106	8
141433	62983	106	15
142522	72582	34	
142583	72582	16	3
	72582	33	
	72582	33	46
142656	72582	33	63
142843	62983	106	11
142916	62983	106	14
143216	62983	106	6
143343	72582	18	11
143383	62983	106	5
143439	62983	106	3
143440	62983	106	18
143559	62983	106	7
144034	72582	29	7
144116	72582	64	

Reference No.	Mfg Code	Fig No.	Item No.
1448	02249	112	3
1449	02249	112	9
145-4510915F10	80064	32	12
145-4510915F12	80064	32	10
145-4510915F2	80064	32	7
145-4510915F7	80064	32	8
145-4510915F9	80064	32	14
145-4510916M1	80064	158	9
145-4510916P13	80064	158	2
145-4510923-51	80064	139	33
145-4510923-64	80064	139	36
145-4510923-65	80064	139	40
145-4510923-86	80064	139	28
145-4510931-29	80064	158	12
145-4510931-30	80064	158	13
145-4510931-36	80064	158	7
145-4510931-39	80064	158	6
145-4510931-40	80064	158	16
145-4510931-8	80064	158	3
	80064	158	10
145-4510932-17	80064	95	3
145-4510932-18	80064	95	2
145-4510932-23	80064	100	31
145-4510932-24	80064	95	6
145-4510934-18	80064	157	7
145-4510934-48	80064	157	13
145-4510934-62	80064	157	4
145-4510934-63	80064	157	6
145-4510943	80064	117	1
145-4510943-10	80064	117	7
145-4510943-2	80064	117	6
145-4510954M1	80064	148	2
145-4510954M2	80064	148	7
145-4510954M5	80064	148	9
145-4510955-1-3-5	80064	156	
145-4510955-26	80064	156	
145-4510955-27	80064	156	
145-4510955-28	80064	156	
145-4510955-3	80064	156	24
145-4510955-33	80064	156	
145-4510955-38	80064	156	8
145-4510955-39	80064	156	12
145-4510955-41	80064	156	18
145-4510955-42	80064	156	19
145-4510955-43	80064	156	13
145-4510955-48	80064	156	14
145-4510955-49	80064	156	25
145-4510955-5	80064	156	15
145-4510955-55	80064	156	
145-4510955-60	80064	156	
145-4510956-40	80064	156	
1450	02249	112	10
1452	02249	112	12
1453	02249	112	15
1454	02249	112	14
1455	02249	112	4
1456	02249	112	5
1458	02249	112	7
	62983	138	6
1459	02249	112	1
146	76122	164	25
1460	02249	112	17
14614	81321	8	14
1462	62983	139	2
1463	02249	112	6
14797	81321	8	13
14798	81321	9	10
1487	62983	142	5
15	96151	99	15
15-07028-001	50465	149	3
15-07141-001	50465	149	10
15-07151-001	50465	149	12
15-07155-005	50465	149	18
15-07156-001	50465	149	15
15-07158-02	50465	149	9
15-07165-001	50465	149	4
15-10	31211	46	43
15-11	31211	46	55
15-12	31211	46	47
15-13	31211	46	64
15-3	31211	46	58
	31211	46	27

Section IV. INDEX-FEDERAL STOCK NUMBER AND REFERENCE NUMBER CROSS-REFERENCE TO FIGURE AND ITEM NUMBER

Reference No.	Mfr Code	Fig No.	Item No.
15-7	31211	46	32
	31211	46	50
15-8	31211	46	34
15F22-209	26571	22	9
15002	81321	7	7
	81321	8	7
15006	96151	99	9
1501	86376	85	17
1502	86376	85	6
1502IN450EG	14959	120	27
1502IN900EG	14959	120	4
1503-3-4000	82271	50	46
1503-6	01276	49	
	01276	102	
1503-8	01276	49	
	01276	102	
	01276	102	
	01276	103	
1504	86376	85	25
1506	86376	85	28
1507359	99974	96	2
1508350	72582	64	
1509	02249	108	8
1509-16	01276	118	
1509-20	01276	118	
1512	86376	85	11
1513	86376	85	13
152	76122	164	19
1528732	72582	41	38
	72582	63	5
1535530	72582	41	
1536316	72582	41	
1536341	72582	41	6
154	76122	164	3
154004	62983	142	9
154010	62983	138	23
154012	62983	142	12
154013	62983	139	24
154018	62983	138	20
154023	62983	139	6
154078	62983	142	19
154129	62983	138	10
154132	62983	139	9
1543776	72582	1	6
1543857	72582	4	2
1545	02249	108	9
1546	02249	108	3
1547	02249	108	5
1548	02249	108	6
1549	02249	108	4
155-3-4IN	41592	10	23
1550	02249	108	2
1552	02249	108	7
1557	02249	140	15
15605	97418	88	1
1561	02249	140	17
1561509	72582	41	
1563	02249	109	3
	02249	140	14
	86376	85	15
1564	02249	109	4
	02249	140	11
1565	02249	109	5
	02249	140	12
1565185	72582	41	6
1566	02249	109	13
1568	02249	108	1
	02249	140	2
1569	02249	109	11
	02249	140	6
1569106	72582	41	
1569407	72582	41	
1569669	72582	41	5
157	76122	164	7
1570	02249	140	7
1571	02249	109	10
1572	02249	140	5
1573	02249	109	8
	02249	140	4
1574	02249	109	9
	02249	140	8
1575	02249	140	16
1576	02249	140	10
1578	02249	109	6
	02249	140	9
1579	02249	109	7
	02249	140	3
158	76122	164	6
158674	72582	75	23
1587	02249	140	18
1589	02249	109	2
1590	02249	109	12
1591-125	02249	109	14
1599	02249	140	17
16-12F8TXS	45681	100	8
16-12TRBTXS	08752	100	27
16-27	31211	46	61
16-28	31211	46	30
16J8TXS	08752	100	9
16M20UFS	08752	119	
16R8TXS	08752	100	20
160-1-8	47296	146	9
160-6	47296	145	
160-8	47296	146	
161-12TRBTXS	45681	100	10
1610	70278	128	11
1611-6	79470	21	57
1611X12	79470	11	
16131	05748	161	8
1614	86376	85	16
1650	95879	80	16
16622	81321	8	16
1690067	72582	35	28
1691006086089-44	79470	51	55
	79470	51	56
1691006086089-72	79470	51	6
1691006086089-75	79470	51	48
1701	62983	106	17
1703	62983	105	13
1705	62983	124	21
1712	86376	86	6
172302	62983	105	9
1725G	86376	85	5
173342	72582	33	
17433	81321	7	5
	81321	8	5
	81321	9	6
1751	86376	84	21
1752	86376	85	2
1776	86376	86	3
17771	81321	7	3
	81321	8	3
	81321	9	4
17783	81321	7	6
	81321	8	6
	81321	9	7
179812	72582	44	25
179816	72582	41	1
	72582	72	53
1798165	72582	40	27
179857	72582	55	3
	72582	63	9
179866	72582	35	1
18K2	07988	129	
180129	72582	68	9
181333	72582	55	12
181365	72582	7	
181385	72582	68	1
18142	81321	8	17
18143	81321	8	
181433	72582	65	27
183201	72582	13	7
183584	62983	105	4
18361-1	41625	76	43
184703493	98042	21	37
1852	86376	85	1
1856819	16764	47	24
	16764	48	24
1861791	16764	47	45
186285	72582	2	5
	72582	48	
186288	72582	61	3
186289	72582	61	5
186312	72582	36	

Reference No.	Mfr Code	Fig No.	Item No.
20-135	31211	46	29
20-138	31211	46	63
20-139	31211	46	56
20-140	31211	46	48
20-156	31211	46	37
20-52	31211	46	9
20-53	31211	46	6
20-54	31211	46	26
	31211	46	46
20-56	31211	46	19
20-68	31211	46	44
20-70	31211	46	57
20-72	31211	46	37
208GTXS	08752	118	15
20F8TXS	08752	118	18
200085	05160	141	7
200174	05160	141	8
200465	62983	125	25
200879	05160	141	6
200882	05160	141	3
201-4510950-1	80064	51	51
201-4510950-10	80064	51	50
201-4510950-100	80064	51	39
201-4510950-101	80064	51	40
201-4510950-11	80064	51	54
201-4510950-12	80064	51	1
201-4510950-2	80064	51	5
201-4510950-24	80064	51	10
201-4510950-3	80064	51	13
201-4510950-4	80064	51	58
201-4510950-5	80064	51	30
201-4510950-6	80064	51	31
201-4510950-7	80064	51	8
201-4510950-8	80064	51	16
201-4510950-9	80064	51	28
201-4510950-98	80064	51	42
201-4510950-99	80064	51	37
201132	05160	141	1
201164	05160	141	4
201177	05160	141	5
20142-12-12	08752	101	13
2021-4-4S	01276	120	30
2021-6-6S	01276	49	23
2021-6-8S	01276	49	24
2021-8-12S	01276	49	57
	01276	50	14
2024-4-6S	01276	49	49
2024-6-6S	01276	49	25
2024-6-8S	01276	49	26
2025-6-8S	01276	49	28
203	76122	165	29
2030-6-8S	01276	49	29
204	76122	165	24
2047-8-8S	01276	10	8
205-4510947-33	80064	25	16
205-4510947-44	80064	25	14
205-4510947-54	80064	25	17
205-4510947DET3D	80064	25	21
205-4510947DET4B4B	80064	25	18
205-4510947DET4CPF	80064	25	8
205-4510947DET4CSF	80064	25	8
205-4510947DET4C1	80064	25	15
205-4510947DET4D1	80064	25	19
205-4510947DET4D5D	80064	25	19
205-4510947DET5A	80064	25	13
205-4510947DET5B	80064	25	20
205-4510947DET5CPA	80064	25	8
205-4510947DET5CSA	80064	25	8
205077	62983	125	2
205533	62983	125	1
20599	96151	99	4
206C86	62983	138	17
20641	96151	99	22
20642-12-12	08752	101	11
206772	62983	138	18
2070610	72582	42	33
20783	96151	99	6
208	76122	165	25
208M	76122	165	25
2080-6-6S	01276	49	27
2080-8-8	01276	102	30
208093	62983	139	5
2081-12-6S	01276	49	30
2081-24-16S	01276	100	4
2081-24X20S	01276	118	25
2081-6-2S	01276	49	48
2081-6-4S	01276	49	45
2081-8-6S	01276	49	50
2082-4S	01276	49	18
2082-6S	01276	49	47
2083-2-2S	01276	49	33
2083-20X16S	01276	118	14
2083-6-4S	01276	49	31
	01276	49	55
2083-6-6S	01276	49	32
2089-6-6S	01276	49	34
209-4510945-1	80064	20	29
	80064	20	36
	80064	20	50
	80064	20	63
209-4510945-10	80064	20	47
209-4510945-18	80064	20	9
	80064	20	11
	80064	20	13
	80064	20	16
	80064	20	17
	80064	20	19
209-4510945-19	80064	20	15
209-4510945-24	80064	20	33
209-4510945-26	80064	20	23
	80064	20	25
	80064	20	27
	80064	20	31
209-4510945-28	80064	20	46
209-4510945-3	80064	20	51
	80064	20	53
	80064	20	55
	80064	20	57
	80064	20	60
	80064	20	64
	80064	20	66
	80064	20	68
	80064	20	70
	80064	20	72
	80064	20	74
	80064	20	76
	80064	20	79
209-4510945-31	80064	20	48
209-4510945-38	80064	20	7
209-4510945M3	80064	32	1
209-4510945M4	80064	32	4
209-4510945M5	80064	32	2
209-4510945M6	80064	32	5
209A	76122	165	26
2090	62983	142	20
2090-6-6S	01276	49	35
	01276	49	46
2090270	72582	17	35
2090519	72582	16	11
2092-6-6S	01276	49	36
2093-8-8S	01276	51	18
209555	62983	139	19
20989	81321	8	8
21E064	72962	78	15
210	34749	11	19
	34749	102	22
	34749	120	21
	34749	121	8
	34749	122	4
	34749	163	8
210-1-21N	00986	101	10
210-2-7-81N	34749	163	17
210-3-81N	34749	123	14
210-4510944-12	80064	11	30
210-4510944-13	80064	11	25
210-4510944-20	80064	11	
	80064	11	16
	80064	12	4
210-4510944-29	80064	11	1
210-4510944-31	80064	11	4
210-4510944-33	80064	11	2
210-4510944-35	80064	11	6
210-4510944-40	80064	11	3
210-4510944-46	80064	11	13

Section IV. INDEX-FEDERAL STOCK NUMBER AND REFERENCE NUMBER CROSS-REFERENCE TO FIGURE AND ITEM NUMBER

Reference No.	Mfr Code	Fig No.	Item No.
186312	72582	68	8
186314	72582	63	19
186580	62983	138	9
186601	72582	33	1
186612	72582	17	41
186626	72582	61	31
186631	72582	74	3
186658	72582	42	2
186678	72582	28	9
187	76122	164	13
1874847	16764	47	
	16764	48	
1874851	16764	47	
	16764	48	
189691	72582	71	9
	72582	75	38
	72582	75	48
19-2-211	26571	10	1
1900FFG	58847	51	12
1900FFG1-4IN	38508	49	22
1900FFG3-8IN	38508	49	21
190362	62983	124	23
1904981	16764	47	21
	16764	48	21
1904982	16764	47	20
	16764	48	20
1904987	16764	48	
	16764	48	
1904988	16764	48	3
	16764	48	26
1904998	16764	48	10
	16764	48	46
1906016	16764	47	1
	16764	48	1
1906063	16764	47	48
	16764	48	48
19062	82271	53	35
1906902	16764	47	14
	16764	48	14
1907461	16764	47	37
	16764	48	37
1907462	16764	47	33
	16764	48	33
1907464	16764	47	4
	16764	48	4
1907466	16764	47	17
	16764	48	17
1907467	16764	47	
	16764	48	
1907471	16764	47	11
	16764	48	11
1907472	16764	47	
	16764	48	
1907473	16764	47	
	16764	48	
1907474	16764	47	
	16764	48	
1907475	16764	47	22
	16764	48	22
1907477	16764	48	25
1907482	16764	47	49
1907491	16764	47	29
	16764	48	29
1907494	16764	47	
	16764	48	
1907495	16764	47	33
	16764	48	35
1907496	16764	47	50
1907497	16764	47	51
1907507	16764	47	
	16764	48	
1907508	16764	47	
	16764	48	47
1907599	16764	47	52
	16764	48	52
1907600	16764	47	53
	16764	48	53
1907613	16764	48	2
1908648	16764	48	
190910	72582	33	66
1912383	16764	47	31
	16764	48	31
1912384	16764	47	32
	16764	48	32
1912385	16764	47	34
	16764	48	34
1912386	16764	47	
	16764	48	
1912387	16764	47	
	16764	48	
191249	72582	1	1
1913080	16764	47	
	16764	48	
1913086	16764	47	16
191400	62983	124	19
1914107	16764	48	
1914580	16764	47	
1914648	16764	48	8
1914869	16764	47	2
1916439	16764	47	
1916584	16764	48	50
1916585	16764	48	51
191668	62983	124	24
192413	72582	61	1
1926299	16764	47	30
	16764	48	30
1928500	16764	47	
1928510	16764	47	39
	16764	48	39
1930232	16764	47	5
	16764	48	5
1931671	16764	47	
	16764	47	43
	16764	48	
	16764	48	43
1931678	16764	48	44
1931679	16764	48	45
1931680	16764	47	23
	16764	47	44
	16764	48	23
193220	62983	125	23
193428	62983	125	24
1938993	16764	47	36
194	96151	99	11
1946984	16764	48	49
1965093	16764	47	
	16764	48	
1968636	16764	47	18
198E3-4IN	14959	103	45
1988	70270	155	3
199491	62983	124	2
199740	62983	124	1
2-1	31211	46	65
2-126N103-7	83259	127	22
2-2	31211	46	60
2-210N103-7	83259	126	25
2-214N103-7	83259	126	21
2-218N103-7	83259	126	23
2-242N103-7	83259	126	
2-342N103-7	83259	126	22
2-4	31211	46	40
2-5	31211	46	62
2INCLOSE	63696	162	20
20-07479-02	50465	149	17
20-109	31211	46	31
	31211	46	49
20-110	31211	46	42
	31211	46	54
20-111	31211	46	20
	31211	46	25
20-112	31211	46	11
20-113	31211	46	41
	31211	46	53
20-115	31211	46	39
20-116	31211	46	35
20-117	31211	46	28
20-119	31211	46	24
	31211	46	45
20-128	31211	46	2
20-129	31211	46	6
20-130	31211	46	7
20-131	31211	46	52
20-133	31211	46	10
20-134	31211	46	12

Section IV. INDEX-FEDERAL STOCK NUMBER AND REFERENCE NUMBER CROSS-REFERENCE TO FIGURE AND ITEM NUMBER

Reference No.	Mfr Code	Fig No.	Item No.
210-4510944-51	80064	11	10
21011-4IN	00986	119	11
21016	81321	9	11
2103A	76122	159	
2104A	76122	159	
21045-17	96151	99	18
21046-1	96151	99	2
21047-1	96151	98	9
2105A	76122	159	
211-4	03925	101	3
211-8	03925	101	1
211-9	03925	10	
211R32	03925	120	
211R32PM32AS32-216	03925	120	22
2111	92959	119	15
211159	62983	142	16
21118-2	96151	99	7
21120-1	96151	99	17
21120-2	96151	99	17
21124	96151	99	8
21125	76122	166	7
	76122	167	7
2114	34749	163	16
	92959	119	19
21140	76122	164	17
	76122	167	29
21142	76122	164	10
21146	96151	98	4
21149	76122	167	38
21150	76122	164	24
	76122	167	40
21153	76122	164	18
	76122	167	30
21157	76122	167	25
21159	76122	164	11
	76122	167	10
21161	76122	167	35
2117	92959	119	16
2117-21-2 IN	26403	11	8
21174	76122	164	29
	76122	167	36
21176	76122	164	1
	96151	99	19
21180	76122	164	29
	76122	167	36
21184	76122	164	21
	76122	167	3
21185	76122	167	1
21188	76122	167	31
21189	76122	164	16
	76122	167	27
21191	76122	164	4
21192	76122	164	5
	76122	165	5
21194	76122	164	2
21198	76122	167	28
212-2IN	26403	20	
21207	76122	166	36
21208	76122	165	10
	76122	166	29
2121	76122	159	
21210	76122	165	6
21216	76122	166	38
21219	76122	165	9
	76122	166	26
21220	76122	165	13
	76122	166	30
21221	76122	165	19
21224	76122	166	27
21225	76122	165	7
	76122	166	10
21226	76122	166	35
21228	76122	165	2
21233	76122	165	16
	76122	166	3
	76122	166	14
	76122	167	14
21234	76122	166	31
21236	76122	165	12
	76122	166	28
21244	76122	164	15
	76122	167	26
21260	76122	165	28
	76122	166	40
21261	76122	166	32
212647	62983	125	26
21267	76122	165	30
	76122	166	1
21268	76122	166	
	76122	166	2
21284	76122	164	20
21296	81321	7	9
2136	86376	86	4
214279	72582	16	7
21507	76122	166	4
	76122	167	4
2157	76122	164	9
	86376	84	20
216R20	03925	119	
216W	21335	128	10
2160	92959	119	12
2161	62983	105	11
	86376	84	26
2162	86376	84	25
2163	86376	84	22
2164	86376	84	19
2166	86376	84	24
21661	76122	167	33
21662	76122	166	20
	76122	167	20
21664	76122	167	37
21668	76122	166	
	76122	167	
21669	76122	167	
2167	86376	84	23
21670	76122	167	21
21671	76122	167	24
21672	76122	167	23
21673	76122	166	6
	76122	167	6
21675	76122	167	9
21676	76122	167	11
21677	76122	167	8
21678	76122	166	33
	76122	167	34
21679	76122	166	5
	76122	167	5
2168	86376	84	15
21685	76122	166	34
21691	76122	166	
21692	76122	166	24
21693	76122	166	23
21694	76122	166	21
21695	76122	166	9
21696	76122	166	11
21697	76122	166	8
217D	76122	165	3
21723	76122	166	16
	76122	167	16
21751	76122	167	32
218585	62983	125	21
2186	86376	84	17
2187	86376	84	18
2188	86376	84	38
	92959	119	17
2189	86376	84	10
219	76122	165	11
219210	72582	33	
2198	86376	84	39
2199	86376	84	36
22MA28TYPE1GRADEBC	81348	20	
22SCL10	36581	131	
2200-6	98660	50	37
2201	86376	84	40
221R32	03925	119	
	03925	119	
221000-6S	01276	49	44
22126	13800	6	9
2213	86376	84	14
	86376	85	19
221447	63977	139	12
2223	76122	159	
2225A	76122	159	18
2226A	76122	159	

Section IV. INDEX-FEDERAL STOCK NUMBER AND REFERENCE NUMBER CROSS-REFERENCE TO FIGURE AND ITEM NUMBER

Reference No.	Mfr Code	Fig No.	Item No.
2230GRAY	77969	156	
223812	72582	61	40
224309	62983	124	5
2243465	72582	6	5
224476	62983	124	25
225P6	03925	123	
225P6PM6PM6-24	03925	123	10
	03925	123	23
225R5	03925	119	
225R8	03925	123	
225R8PM8PM8-10	03925	123	24
226157	62983	138	26
226163	62983	138	27
226191	62983	139	13
228	76122	165	23
22838	76122	165	27
22920	76122	164	34
229236	62583	105	14
	62983	106	16
22929	76122	164	23
	76122	167	39
22931	76122	164	23
	76122	167	41
22934	76122	165	20
22936	76122	165	29
	76122	166	39
22940	76122	166	17
	76122	167	17
22941	76122	167	
22942	76122	166	13
	76122	167	13
22943	76122	166	22
	76122	167	22
22944	76122	166	19
	76122	167	19
22945	76122	166	12
	76122	167	12
22968	76122	166	15
	76122	167	15
23071	76122	164	27
23072	76122	164	27
23073	76122	165	22
23074	76122	165	22
23075	76122	166	18
	76122	167	18
23127	76122	164	
23129	76122	165	
23173	76122	164	
23178	76122	165	
2323	86376	85	21
232799	62983	138	12
232840	62983	139	11
233624	62983	125	22
233709	62983	124	26
234248	62983	125	5
236	76122	165	4
2371	86376	84	37
237149	62983	139	15
237150	62983	139	17
237151	62983	139	18
237152	62983	139	20
237159	62983	139	7
237160	62983	139	22
237452	62983	139	23
238-8	79470	10	11
238755	62983	124	22
238834	62983	139	10
239	76122	165	8
2391	86376	84	13
	86376	85	
2392	86376	84	11
	86376	85	
24-1-213	26571	31	2
24CBTXS	08752	118	34
24EBTXS	08752	118	38
24GBTXS	08752	118	26
24H8	24161	11	
24PBTXS	08752	118	19
24SG08-06	30327	100	14
24SG16-12	30327	100	21
24SJ04	30327	49	56
240	76122	165	24
242A6JS6PM6-28	03925	123	1
242R6	03925	123	
242R6JS6PM6-28	03925	123	7
	03925	123	11
242074	62983	138	21
242075	62983	138	25
242076	62983	138	19
242079	62983	138	16
24213	76122	167	
24214	76122	167	
24216	76122	167	
24217	76122	167	
242789	62983	138	24
245-4510946F22	80064	23	40
245-4510946F33	80064	23	
245-4510946F42	80064	23	45
245-4510946F45	80064	23	
245-4510946F50	80064	162	14
245-4510946F52	80064	23	23
245-4510946F53	80064	23	20
245-4510946F57	80064	23	22
245-4510946F60	80064	23	18
245-4510946F9	80064	23	46
245-4510946P1	80064	23	34
245-4510946P10	80064	23	7
245-4510946P14	80064	23	43
	80064	162	17
245-4510946P4	80064	23	28
245-4510946P5	80064	23	11
245-4510946P7	80064	23	3
245-4510946P9	80064	23	16
	80064	162	15
245-4510949-59	80046	87	3
245-4510951M18	80064	151	3
245-4510951M19	80064	151	4
245-4510951M7	80064	150	6
245PWS1-2IN	63686	23	17
245PWS1IN	63686	23	4
245WS1IN	94026	22	16
24571	76122	166	
24572	76122	166	
246	63686	11	23
	63686	12	1
2461	62983	106	10
25V17A1C10-002	62983	124	
250-2-7-8IN	34749	162	32
250-2IN	34749	20	58
	34749	20	77
250H	14959	51	41
2503	02249	112	16
2504	02249	112	13
2519	86376	85	14
252	76122	165	14
252-8	79470	10	9
254-2INW8S	14959	21	34
254H1-1-4IN	14959	122	8
2556-12	00624	49	
2559	59730	139	43
257196	62983	138	14
2590057-901	07187	169	2
2593843-901	07187	169	1
259871	62983	138	1
26M3-213	98042	31	6
26M4-213	98042	31	4
26M5-213	26571	31	7
26M6-213	26571	31	5
26OE2IN150L8	14959	32	11
2606	14959	10	13
261	86376	84	1
261342	62983	138	2
26176	62983	138	3
261791	62983	138	8
261792	62983	139	26
26187	76122	166	37
262711	62983	138	4
2651-12	01276	118	
268E	14959	103	46
2704	62983	142	7
2707	02249	112	2
271	86376	85	29
271557	72582	52	1
272R20	03925	120	

Section IV. INDEX-FEDERAL STOCK NUMBER AND REFERENCE NUMBER CROSS-REFERENCE TO FIGURE AND ITEM NUMBER

Reference No.	Mfr Code	Fig No.	Item No.
272R20	03925	121	
	03925	122	
272R20PMN20PMN20-3	03925	120	29
	03925	121	1
272R20PMN20SA20-13	03925	122	22
272R20PMN20SA20-20	03925	122	13
272R20PMN20SA45A25	03925	122	1
272R20PM20PM20-30	03925	120	35
272480	72582	64	
2732	62983	142	22
273347	72582	33	
2765	86376	84	29
2766	86376	84	35
2767	86376	84	28
2768	86376	84	27
2769	86376	84	30
2771	86376	86	7
28C8TXS	08752	118	30
28D8TXS	08752	118	35
28E8TXS	08752	118	31
280784	62983	139	3
280786	62983	138	7
281	62983	142	13
286-3-4IN	37239	11	22
287F11	98042	90	1
292085	62983	105	6
295688	62983	139	8
29777-2	81321	9	12
2983 PAHZZ	4320-	125	
3-12	31211	46	38
3-14	31211	46	34
3-16GR1STL	82271	53	9
3-32GR1STL	82271	53	12
3-4INIPSX2INLG	63686	51	43
3-4INIPSX4INLG	63686	51	47
3-4INX1-2IN	14959	103	17
	14959	103	43
3-4INX1-2INX3-4IN	14959	11	27
3-8INX3-4INLG	74427	157	3
	74427	157	9
3-8INX3INLG	74427	157	5
3-8INX4INLG	08716	97	15
3-8IPSFX3-8INTUBE	14959	21	8
3C12-3-3	96259	49	20
30F900	02929	93	23
31-1	72201	153	14
31-10	72201	153	12
31-11	72201	153	11
31-12	72201	153	10
31-13	72201	153	9
31-14	72201	153	7
31-15	72201	153	2
31-16	72201	153	16
31-17	72201	153	22
31-18	72201	153	24
31-19	72201	153	19
31-2	72201	153	8
31-20	72201	153	21
31-21	72201	153	23
31-22	72201	153	17
31-23	72201	153	18
31-25	72201	153	25
31-3	72201	153	3
31-4	72201	153	4
31-5	72201	153	1
31-6	72201	153	15
31-7	72201	153	5
31-8	72201	153	6
31-9	72201	153	13
31012	82271	53	11
311-45001	16954	130	12
31111	82271	53	38
31118-1-24	82271	53	36
3124-20	79470	118	17
314W6-24	82271	53	
31403	82271	53	8
31404	82271	53	14
31405	82271	53	13
31409	82271	53	10
31410	82271	53	5
31411	82271	53	7
31413	82271	53	4
31612	82271	53	37
319-8	03925	101	5
320-6-6	03925	50	7
	03925	50	34
	03925	50	36
3200-6	98660	50	22
	98660	50	38
3222759	72582	40	7
323-4	03928	50	8
323-8S	03925	10	
3230393	72582	7	19
324-21612	16954	130	5
324-21620	16954	130	16
325-08110	91940	130	10
326-8-6S	03925	10	
326-8-8	03925	101	6
	98441	102	
	98441	103	
3274	02249	140	11
3277	02249	140	12
3290211	72582	45	3
3290572	72582	1	8
3291487	72582	18	9
3292492	72582	107	7
3293	02249	140	13
3309	43334	61	19
34-1-1-2	14959	161	24
34-2	14959	161	4
3405-2-1-2IN	63686	162	19
3405-2IN	63686	22	18
3409	63686	20	21
	63686	20	38
3409-3-8IN	63686	20	42
3411	63686	162	38
3411-2IN	63686	22	17
3411-2X1-2X2IN	63686	23	33
	63686	162	21
3413	63686	162	11
3425	63686	20	40
3430	63686	162	1
3477	63686	50	19
3486-2IN	63686	22	14
358	24161	22	2
	24161	22	6
	24161	23	6
35V25A1C10-002	62983	125	
35V25A1C10L002	62983	125	
35W	24161	20	6
	24161	22	4
	24161	22	8
	24161	23	2
	24161	23	27
350-10000	16954	130	17
35027-10-4	79470	100	25
35242	09608	107	4
35243	09608	107	6
35330	61208	126	12
356-2-4	03925	101	15
356-31137	16954	130	21
358-24240	16954	130	1
3580	24161	159	16
35824-10	79470	100	24
36-10-210	26571	160	2
36W	24161	21	2
3605-1-1-2IN	63686	23	12
3605-1-4IN	63686	20	10
	63686	20	12
3605-1IN	63686	20	28
	63686	20	30
	63686	20	35
3605-3-4	63686	23	9
3607-1IN	63686	20	24
3607-2IN	63686	20	56
	63686	20	65
3610-1-1-2X1-1-2X1	63686	23	19
3610-1-1-2X1X1IN	63686	23	10
3610-1-4IN	63686	20	18
3623	63686	20	73
	63686	20	75
3628	63686	20	52
	63686	20	54
	63686	20	61

Section IV. INDEX-FEDERAL STOCK NUMBER AND REFERENCE NUMBER CROSS-REFERENCE TO FIGURE AND ITEM NUMBER

Reference No.	Mfr Code	Fig No.	Item No.
3628	63686	20	67
	63686	20	69
	63686	20	80
3634	63686	20	59
	63686	20	78
3638-1X3-4IN	63686	23	
3651	63686	23	42
	63686	16Z	16
3654	63686	23	13
3674	63686	23	39
3674-11N	63686	22	21
3676	63686	20	8
	63686	20	20
	63686	20	37
37-22-210	26571	160	4
370	96151	99	14
3709X24	79470	118	16
3720	24161	159	17
3732-11N	63686	20	22
	63686	20	34
3732-3-4IN	63686	23	8
3778	98738	92	4
377G	98738	92	5
38858-210	26571	160	6
38871-210	26571	160	7
38C13C210	26571	160	8
380	14959	123	12
3811-1-4IN	14959	120	32
386	14959	121	2
388	26403	117	2
4-4F8TXS	08752	100	28
	08752	118	43
4-4G8TXS	08752	49	54
4-4G8TXS	08752	118	41
4E8TXS	08752	49	53
	08752	100	23
	08752	118	42
4008338-901	07187	169	
400861	91675	157	14
4010408	07187	169	3
4010409	07187	169	45
4010411	07187	169	42
4010412	07187	169	38
4010413	07187	169	39
4010417	07187	169	32
4010418	07187	169	33
4010419	07187	169	34
4010425	07187	169	21
4010426	07187	169	22
4010427	07187	169	28
4010428	07187	169	27
4010440	07187	169	48
4010445	07187	169	4
4010446	07187	169	5
4010447	07187	169	6
4010448	07187	169	7
411-6	01276	102	
411-8	01276	102	
	01276	103	
412-4-6	01276	102	
416-4-4	03925	101	16
4175EC	24161	22	3
42	96151	99	20
42X12	88334	11	21
420WS1IN	63686	20	26
420WS2IN	63686	20	71
421-12	08752	101	2
	08752	103	
421-21	08752	102	
421CHAIN40-1RCA	96906	76	
	969C6	80	
428-1-1-2	14959	161	29
428-2	14959	161	10
	14959	162	22
432777	72582	44	29
	72582	44	34
434X4	79470	33	
44-05-1-4	98991	100	
44-05-10-4	98991	100	
44-05-11-4	98991	100	
44-05-13-20	98991	100	
44-05-15-52	98991	100	
44-05-16-4	98991	100	
44-05-2-4	98991	100	
44-05-3-4	98991	100	
44-05-4-4	98991	100	
44-05-5-80	98991	100	
44-05-6-60	98991	100	
44-05-7-69	98991	100	
44-05-8-69	98991	100	
44-05-9-25	01276	49	41
4411-6S	01276	118	39
4412-12-12S	01276	100	
4412-12S	01276	49	43
4412-4-6S	01276	10	
4412-6-8	01276	49	40
4412-6-8S	01276	10	
4412-8-8	72582	72	44
443230	72582	44	30
443858	72582	44	35
	98991	102	5
444-48	72582	64	
444052	72582	35	
444687	72582	74	19
	72582	36	18
444692	72582	75	4
	72582	67	23
444867	72582	67	15
444873	80064	155	1
445-4510939M1	80064	154	12
445-4510939M10M11M	80064	154	13
445-4510939M12	80064	154	8
445-4510939M14	80064	154	11
445-4510939M23	80064	154	22
445-4510939M24	80064	154	21
445-4510939M25	80064	154	20
445-4510939M27	18072	155	7
445-4510939M38THRU	72582	33	28
445520	72582	61	12
445594	72582	69	3
446072	14959	21	
451	72582	27	9
451078	76122	165	15
4512	72582	33	86
451905	05258	158	8
452-25	72582	33	
452644	26403	11	18
453	26403	12	3
	16764	47	28
453435	16764	47	13
453844	16764	47	6
453894	16764	48	6
	16764	47	25
454336	72582	14	3
455532	72582	33	58
457193	72582	55	22
457249	02249	112	11
458	02249	112	11
459	77969	156	
463GRAY	01276	49	37
4721-6S	01276	118	
4722-16S	01276	118	
4722-20-20S	01276	118	
	01276	118	36
4722-6S	01276	49	38
474-12B	01276	50	21
4741-12B	01276	49	39
	01276	49	42
47421	82271	53	6
4790-16S	01276	118	
48-12A12-12	79470	10	10
48X10	79470	21	
	88334	11	26
48X12X12	79470	11	29
48X6X8	41947	21	58
48X8A	79470	21	
48X8X8	79470	21	60
489	26403	12	6
49NTE144	72962	126	17
49X12X12	79470	11	20
492619	72582	6	11
5-16INX11-8INLG	75301	139	35
5-16INX21NLGHD	75301	139	32

Section IV. INDEX-FEDERAL STOCK NUMBER AND REFERENCE NUMBER CROSS-REFERENCE TO FIGURE AND ITEM NUMBER

Reference No.	Mfr Code	Fig No.	Item No.
5-8INX15-8INLG	75301	139	39
5-8X13	14959	19	
5V17A1C10L002	62983	124	2
50-00001-013	50465	149	16
50-00001-024	50465	149	7
50-00001-029	50465	149	11
50-00006-049	50465	149	8
50-00007-019	50465	149	14
50-00015-003	50465	149	6
50-00029-086	50465	149	3
50-00031-006	50465	149	2
50-00033-022	50465	149	13
50-4-18-17-7	38597	33	
	38597	69	2
	38597	69	12
50ARS24V	08108	96	15
5000-175	79136	127	17
5000-188H	82271	53	19
5000-231	79136	127	25
5008-334	79136	126	4
504F	72922	30	2
508-4510948-104	80064	162	18
508-4510948-107	80064	161	22
	80064	161	28
508-4510948-116	80064	161	25
508-4510948-117	80064	161	
508-4510948-13	80064	163	5
508-4510948-130	80064	163	15
508-4510948-132	80064	163	14
508-4510948-138	80064	163	13
508-4510948-140	80064	163	11
508-4510948-141	80064	163	7
508-4510948-142	80064	163	18
508-4510948-144	80064	162	35
508-4510948-146	80064	163	12
508-4510948-147	80064	161	2
	80064	162	31
	80064	163	10
508-4510948-148	80064	162	43
508-4510948-152	80064	162	6
508-4510948-153	80064	162	12
508-4510948-154	80064	162	9
508-4510948-156	80064	162	3
508-4510948-158	80064	162	37
508-4510948-159	80064	162	28
508-4510948-160	80064	162	42
508-4510948-162	80064	162	40
508-4510948-165	80064	161	15
	80064	162	27
508-4510948-166	80064	161	14
	80064	162	24
508-4510948-167	80064	162	41
508-4510948-169	80064	162	39
508-4510948-173	80064	162	33
508-4510948-174	80064	162	34
508-4510948-25	80064	162	5
508-4510948-77	80064	161	3
508-4510948-89	80064	163	4
508-4510948-95	80064	161	19
508-4510958-154	80064	161	20
5109288	72582	63	1
5109292	72582	4	6
5109765	72582	63	3
5109777	72582	4	12
5110126	72582	72	19
5110199	72582	17	16
5110648	72582	33	48
5110651	72582	33	20
5110652	72582	33	20
5110653	72582	33	19
5110654	72582	33	19
5110659	72582	33	16
5110661	72582	33	26
5110666	72582	33	49
5110753	72582	33	
5110754	72582	33	
5111335	72582	15	3
5111369	72582	2	22
5111422	72582	68	22
	72582	68	29
5111423	72582	68	30
5111424	72582	68	23

Reference No.	Mfr Code	Fig No.	Item No.
5111424	72582	68	31
5111462	72582	3	22
5111686	72582	75	37
5111715	72582	34	47
5111798	72582	2	24
	72582	18	30
	72582	63	28
	72582	75	6
5111881	72582	1	7
5111901	72582	5	24
5111976	72582	33	
5111978	72582	33	72
5111979	72582	33	76
5111980	72582	33	78
5112134	72582	3	21
5112418	72582	42	
5112419	72582	42	
5112421	72582	3	
5112510	72582	37	4
5112511	72582	37	5
5112512	72582	37	1
5112513	72582	37	7
5112678	72582	33	
5112679	72582	33	
5112719	72582	33	36
5112848	72582	33	10
5112899	72582	67	34
5112938	72582	33	
5112991	72582	5	24
5113406	72582	33	19
5113814	72582	74	16
5113815	72582	74	14
5113817	72582	69	7
5113818	72582	69	7
5113914	72582	39	14
5113928	72582	7	
5114011	72582	26	18
5114031	72582	68	26
5114126	72582	33	22
5114442	72582	34	3
5114528	72582	34	15
	72582	34	41
5114625	72582	36	
5114626	72582	36	
5114726	72582	34	4
	72582	34	20
5114848	72582	17	
5115087	72582	66	20
5115157	72582	71	7
5115231	72582	33	
5115232	72582	33	24
5115322	72582	16	21
5115396	72582	28	
5115454	72582	74	6
5115572	72582	68	36
5115656	72582	35	3
5115674	72582	62	
5115700	72582	61	17
5115922	72582	16	20
5115970	72582	33	10
5115971	72582	33	
5116357	72582	75	41
	72582	75	51
5116427	72582	36	2
5116636	72582	61	42
5117003	72582	67	2
5117061	72582	27	32
	72582	28	33
	72582	55	5
	72582	62	12
5117298	72582	41	3
5117369	72582	67	32
5117629	72582	73	14
5118060	72582	18	28
5118061	72582	18	27
5118219	72582	13	1
	72582	26	1
	72582	33	5
	72582	35	7
5118295	72582	61	
5118302	72582	72	12
5118353	72582	35	6

Section IV. INDEX-FEDERAL STOCK NUMBER AND REFERENCE NUMBER CROSS-REFERENCE TO FIGURE AND ITEM NUMBER

Reference No.	Mfg Code	Fig No.	Item No.
5119718	72582	18	25
5119824	72582	64	10
5119848	72582	64	11
5119849	72582	64	3
5119921	72582	2	13
5119923	72582	2	18
5119926	72582	2	17
5119974	72582	67	16
5120017	72582	64	5
5120602	72582	3	3
5120687	72582	16	14
5120726	72582	34	19
5120740	72582	3	2
5120930	72582	67	28
5120993	72582	34	
5120996	72582	34	
5121182	72582	67	27
5121753	72582	68	11
5121815	72582	68	19
5121816	72582	68	19
5121893	72582	18	34
5121970	72582	68	18
5122069	72582	34	6
5122206	72582	71	3
5122281	72582	63	11
5122445	72582	66	8
5122473	72582	36	
5122528	72582	35	14
5122529	72582	35	11
5122530	72582	35	15
5122910	72582	35	26
5122911	72582	35	26
5122921	72582	107	8
5123043	72582	5	
5123250	72582	66	18
5123282	72582	2	15
5123382	72582	3	13
	72582	36	13
5123383	72582	68	34
5123700	72582	66	6
51238822	72582	38	9
5124002	72582	29	
5124003	72582	29	
5125036	72582	73	13
5125108	72582	67	33
5125178	72582	55	14
5125237	72582	67	24
5125466	72582	55	
5126478	72582	4	9
5126686	72582	3	14
	72582	36	14
5126792	72582	33	
5126850	72582	71	11
5126851	72582	71	11
5126911	72582	26	13
5127670	72582	43	6
5127821	72582	74	14
5128640	72582	66	19
5128751	72582	4	16
5128798	72582	4	19
5128977	72582	10	6
5128978	72582	10	6
5128981	72582	10	3
5128983	72582	10	3
5128984	72582	10	3
5128985	72582	10	3
5129129	72582	36	1
5130135	72582	69	9
5130672	72582	62	
5131096	72582	67	29
5131627	72582	27	35
5132866	72582	48	
5133431	72582	3	17
	72582	36	17
5133594	72582	3	16
	72582	36	16
5133716	72582	27	33
5134560	72582	13	9
5134628	72582	13	9
5135515	72582	73	9
5136671	72582	26	17
5136984	72582	10	4

Reference No.	Mfg Code	Fig No.	Item No.
5138077	72582	10	5
5138336	72582	35	4
5138365	72582	93	9
5140	96151	99	
5140373	72582	43	4
5141732	72582	43	4
5143191	72582	17	8
5143616	72582	28	34
5143768	72582	43	6
5143770	72582	44	
5144188	72582	3	
5144531	72582	71	3
5144540	72582	64	
5144542	72582	3	
5144634	72582	64	
5145009	72582	13	4
	72582	33	
	72582	61	
	72582	75	2
5145010	72582	3	18
	72582	75	13
5145092	72582	28	35
5150013	72582	67	1
5150014	72582	75	8
5150020	72582	75	46
5150033	72582	16	23
5150041	72582	67	25
5150050	72582	70	3
5150052	72582	70	4
	72582	70	12
5150054	72582	63	26
5150057	72582	42	6
5150060	72582	75	31
5150087	72582	68	15
	72582	68	24
5150117	72582	71	12
5150129	72582	75	25
5150130	72582	64	
	72582	75	10
5150140	72582	73	16
5150144	72582	39	7
	72582	40	30
5150147	72582	4	5
5150154	72582	5	25
5150155	72582	5	18
	72582	38	14
5150174	72582	74	8
5150182	72582	26	20
5150188	72582	26	11
5150191	72582	26	6
5150193	72582	13	2
	72582	26	2
5150195	72582	2	25
5150196	72582	2	26
5150199	72582	13	3
5150220	72582	34	16
	72582	34	43
5150238	72582	35	2
5150246	72582	33	6
5150250	72582	15	2
5150259	72582	16	15
5150263	72582	16	18
5150265	72582	16	2
	72582	17	38
5150268	72582	67	13
5150269	72582	17	
	72582	33	3
5150271	72582	67	14
5150279	72582	74	15
5150281	72582	35	27
5150286	72582	35	10
5150289	72582	35	8
5150291	72582	67	5
5150292	72582	67	4
5150298	72582	67	6
5150302	72582	67	10
5150303	72582	66	16
5150304	72582	66	15
5150305	72582	66	3
5150311	72582	66	11
5150312	72582	66	7
	72582	66	5

Section IV. INDEX-FEDERAL STOCK NUMBER AND REFERENCE NUMBER CROSS-REFERENCE TO FIGURE AND ITEM NUMBER

Reference No.	Mfg Code	Fig No.	Item No.
5150314	72582	66	4
5150318	72582	66	10
5150322	72582	66	12
5150324	72582	66	2
5150325	72582	66	1
5150329	72582	14	2
5150333	72582	14	4
5150344	72582	35	21
5150345	72582	35	25
5150346	72582	35	24
5150348	72582	35	22
5150349	72582	35	20
5150350	72582	35	18
5150361	72582	29	14
5150372	72582	34	37
5150512	72582	33	4
5150568	72582	55	4
	72582	63	10
5150843	72582	16	17
5150855	72582	34	37
5150856	72582	34	37
5150884	72582	33	83
5150889	72582	33	22
5150890A	72582	33	69
5150892	72582	33	38
5150894	72582	33	11
5150897	72582	33	84
5150898	72582	33	53
5150899	72582	33	40
5150900	72582	4	20
	72582	33	
5150925	72582	33	71
5150941	72582	16	4
	72582	33	15
	72582	33	47
5150943	72582	33	55
5150996	72582	16	5
5151122	72582	75	9
5151272	72582	66	13
5151277	72582	68	33
5151370	72582	72	21
5151430	72582	4	11
5151444	72582	69	10
	72582	69	14
5151476	72582	70	5
5151487	72582	33	
	72582	33	75
5151576	72582	75	14
5151601	72582	66	14
5151737	72582	33	13
5152066	72582	40	15
5152149	72582	75	21
5152804	72582	35	9
5152904	72582	5	26
5152944	72582	33	31
5153060	72582	33	23
5153117	72582	75	45
5153147	72582	72	62
5153154	72582	72	36
	72582	72	39
5153247	72582	72	60
5153260	72582	72	47
5153284	72582	72	7
5153286	72582	72	8
5153309	72582	72	52
5153310	72582	72	40
5153313	72582	72	20
5153449	72582	107	9
5153617	72582	72	38
5153623	72582	65	3
5153627	72582	72	3
5153914	72582	68	37
5153938	72582	34	37
5153986	72582	71	8
5154199	72582	72	24
5154215	72582	5	20
	72582	38	12
5154251	72582	72	35
5154252	72582	72	35
5154319	72582	75	16
5154360	72582	73	15
5154398	72582	34	31

Reference No.	Mfg Code	Fig No.	Item No.
5154400	72582	34	32
5154401	72582	34	33
5154403	72582	33	52
5154422	72582	33	52
5154435	72582	33	60
5154437	72582	33	51
5154438	72582	33	51
5154453	72582	67	22
5154503	72582	33	80
5154538	72582	3	6
	72582	36	6
5155765	72582	72	59
5155816	72582	41	4
5155819	72582	41	3
5155839	72582	73	4
5156285	72582	65	14
5156295	72582	65	16
5156296	72582	65	17
51563	62983	142	21
5156319	72582	2	14
5156498	72582	4	1
5156521	72582	72	46
5156528	72582	72	37
5156532	72582	74	9
5156683	72582	72	45
5156770	72582	5	9
	72582	29	9
5156815	72582	64	12
	72582	72	27
5156816	72582	72	26
5156819	72582	72	28
5156955	72582	72	55
5157192	72582	14	6
5157194	72582	14	5
5157232	72582	34	44
5157244	72582	44	1
	72582	65	.5
5157274	72582	73	10
5157524	72582	61	10
5157930	72582	65	4
5158384	72582	61	9
5158432	72582	33	10
5158640	72582	65	18
5158641	72582	65	15
5158673	72582	68	38
5158819	72582	33	50
5158820	72582	33	50
5158825	72582	13	6
	72582	75	19
5158901	72582	35	29
5159080	72582	33	59
5159347	72582	36	
5159353	72582	74	13
5159381	72582	72	29
5159382	72582	72	29
5159383	72582	72	25
5159384	72582	72	25
5159387	72582	72	19
5159388	72582	72	19
5159430	72582	38	10
5159440	72582	68	10
516-4510940-104	80064	102	29
516-4510940-22	80064	102	23
	80064	103	22
516-4510940-29	80064	104	4
516-4510940-35	80064	104	2
516-4510940-40	80064	102	9
516-4510940-47	80064	104	10
516-4510940-49	80064	103	40
516-4510940-50	80064	102	7
516-4510940-51	80064	102	8
516-4510940-52	80064	103	35
516-4510940-53	80064	104	13
516-4510940-54	80064	104	12
516-4510940-55	80064	103	2
516-4510940-56	80064	102	1
516-4510940-57	80064	102	14
516-4510940-58	80064	102	21
516-4510940-59	80064	102	19
	80064	102	16
516-4510940-6	80064	103	3
	80064	104	9

Section IV. INDEX-FEDERAL STOCK NUMBER AND REFERENCE NUMBER CROSS-REFERENCE TO FIGURE AND ITEM NUMBER

Reference No.	Mfg Code	Fig No.	Item No.
516-4510940-61	80064	102	12
516-4510940-63	80064	102	13
516-4510940-64	80064	102	24
516-4510940-65	80064	103	28
516-4510940-66	80064	102	25
516-4510940-68	80064	103	32
516-4510940-70	80064	103	9
516-4510940-71	80064	103	14
516-4510940-74	80064	103	47
516-4510940-77	80064	103	49
516-4510940-78	80064	103	48
516-4510940-79	80064	103	44
516-4510940-93	80064	102	11
516-4510940-94	80064	103	1
516-4510940-95	80064	102	27
516-4510940-96	80064	102	26
516-4510941-1	80064	120	36
516-4510941-11	80064	120	13
	80064	122	3
516-4510941-117	80064	120	9
516-4510941-118	80064	120	18
516-4510941-119	80064	120	20
516-4510941-120	80064	122	21
516-4510941-121	80064	122	20
516-4510941-122	80064	122	19
516-4510941-123	80064	122	17
516-4510941-124	80064	122	16
516-4510941-125	80064	122	5
	80064	122	14
516-4510941-131	80064	123	28
516-4510941-143	80064	123	30
516-4510941-144	80064	123	19
516-4510941-145	80064	123	20
516-4510941-151	80064	123	8
516-4510941-17	80064	123	27
516-4510941-19	80064	122	24
516-4510941-20	80064	122	23
516-4510941-22	80064	120	5
516-4510941-27	80064	122	12
516-4510941-28	80064	120	11
	80064	122	11
516-4510941-30	80064	122	7
516-4510941-37	80064	120	25
516-4510941-38	80064	120	28
516-4510941-55	80064	120	26
516-4510941-57	80064	120	24
516-4510941-58	80064	120	37
516-4510941-59	80064	120	2
516-4510941-71	80064	120	34
516-4510941-72	80064	120	33
516-4510941-73	80064	121	3
516-4510941-74	80064	121	5
516-4510941-75	80064	121	9
516-4510941-76	80064	121	6
516-4510941-77	80064	121	10
516-4510941-78	80064	121	7
516-4510941-79	80064	121	11
516-4510941-80	80064	120	16
516-4510941-81	80064	120	15
516-4510941-83	80064	120	7
516-4510941-89	80064	123	26
516-4510941-90	80064	123	17
516-4510941-95	80064	123	22
516-4510941-97	80064	123	16
516-4510941-99	80064	123	13
5160037	72582	67	26
5160408	72582	42	32
5161003	72582	13	19
5161021	72582	27	11
	72582	28	14
5161024	72582	27	17
	72582	28	20
5163760	72582	5	12
5163811	72582	2	4
5164146	72582	2	3
5164190	72582	75	40
	72582	75	50
5164510940-23	80064	103	37
5165221	72582	33	82
5165289	72582	34	
5166265	72582	33	
5166750	72582	2	9
5167265	72582	65	7
5167283	72582	65	8
5167276	72582	65	2
5167294	72582	29	13
5167325	24617	21	30
5167380	72582	72	56
5167485	72582	4	4
5167502	72582	4	3
5167727	72582	35	16
5167747	72582	38	2
5167761	72582	18	21
5167762	72582	5	7
5167764	72582	18	35
	72582	18	39
5167775	72582	38	11
5167776	72582	70	11
5168773	72582	2	23
5168826	72582	18	10
5168911	72582	61	30
5169193	72582	72	61
5169195	72582	72	49
5169197	72582	72	43
5169674	72582	17	
5169687	72582	17	25
5169689	72582	17	24
5169710	72582	65	31
	72582	74	7
5169866	72582	39	4
	72582	40	24
5169905	72582	65	10
5170450	72582	28	36
5170507	72582	61	
5170895	72582	63	16
5170961	72582	63	15
5171127	72582	40	20
5171128	72582	40	16
5171139	72582	40	10
5171140	72582	40	25
5171146	72582	39	13
5171147	72582	40	26
5171151	72582	17	40
517139	72582	72	14
5171411	72582	64	6
5171509	72582	2	8
5171724	72582	2	6
5171922	72582	42	31
	72582	42	34
5171953	72582	61	22
5171962	72582	61	37
5171964	72582	61	20
5171965	72582	61	21
5172141	72582	18	22
5172370	72582	61	11
5172387	72582	61	29
5172451	72582	65	29
5172611	72582	39	5
5172612	72582	39	8
5172645	72582	40	14
5172646	72582	40	17
5172670	72582	61	33
5172673	72582	61	34
5172734	72582	68	14
5172764	72582	33	
5172854	72582	61	23
5172865	72582	35	5
5172874	72582	67	30
5172875	72582	67	31
5172923	72582	18	17
5172944	72582	18	16
5172948	72582	18	38
5173018	72582	29	6
5173020	72582	18	2
	72582	18	5
5173129	72582	61	
	72582	61	
5173144	72582	4	10
5173165	72582	17	11
5173166	72582	17	29
5173268	72582	61	27
	72582	150	9
5173362	72582	34	26
5173363	72582	34	22

Section IV. INDEX-FEDERAL STOCK NUMBER AND REFERENCE NUMBER CROSS-REFERENCE TO FIGURE AND ITEM NUMBER

Reference No.	Mfg Code	Fig No.	Item No.
5173364	72582	34	29
5173365	72582	34	25
5173366	72582	34	21
5173384	72582	64	8
5173471	72582	61	39
5173675	72582	17	37
5173730	72582	26	5
5174428	72582	33	27
5174429	72582	33	14
5174449	72582	33	72
5174453	72582	33	
	72582	33	70
5174455	72582	33	76
5174456	72582	33	78
5174971	72582	13	18
5174973	72582	13	22
5174975	72582	13	11
	72582	13	16
5174981	72582	72	4
5175683	72582	5	
5175776	72582	61	15
5175944	72582	72	42
5175983	72582	72	
5175984	72582	72	
5176035	72582	72	50
5176119	72582	72	32
5176128	72582	65	30
5176228	72582	16	22
5176474	72582	27	34
5176767	72582	65	13
5176834	72582	33	
5176837	72582	33	68
5176959	72582	62	
5176998	72582	69	5
5176999	72582	69	4
5177026	72582	27	36
	72582	107	10
5177083	72582	33	41
5177217	72582	2	
	72582	29	3
5177218	72582	29	5
5177232	72582	41	
5177292	72582	13	23
5177293	72582	13	23
5177355	72582	17	12
5177357	72582	17	13
5177358	72582	17	17
5177362	72582	17	15
5177363	72582	17	20
5177368	72582	17	22
5177381	72582	17	9
	72582	17	23
5177383	72582	17	30
5177389	72582	17	5
5177411	72582	17	3
5177418	72582	17	33
5177419	72582	17	33
5177528	72582	74	18
5177578	72582	39	6
	72582	39	9
5177664	72582	3	
5177752	72582	33	
5177769	72582	68	16
	72582	68	25
5177772	72582	5	27
5177777	72582	5	30
5177778	72582	5	29
5177798	72582	75	32
5178006	72582	17	32
5178383	72582	14	1
5178404	72582	40	3
5178427	72582	18	20
5178581	72582	33	
	72582	33	73
5178700	72582	13	15
5178816	72582	16	8
5178817	72582	16	6
5178957	72582	75	15
5178998	72582	75	7
5179017	72582	34	11
	72582	34	38
5179046	72582	34	46
5179049	72582	34	45
5179068	72582	74	17
5179110	72582	33	65
5179630	72582	74	11
5179631	72582	74	12
5179954	72582	66	9
5179962	72582	68	32
5181746	72582	13	14
5181747	72582	13	12
5181801	72582	29	4
5181802	72582	29	2
5182555	72582	33	37
5182556	72582	33	35
5182557	72582	33	32
5182558	72582	33	33
5182559	72582	33	30
5182560	72582	33	36
5182580	72582	2	16
	72582	75	5
5182645	72582	4	17
5182894	72582	3	
5182951	72582	74	5
5182977	72582	33	24
5183042	72582	33	9
5183268	72582	33	81
5183286	72582	33	87
5183305	72582	67	20
5183313	72582	33	65
5183314	72582	33	65
5183329	72582	75	17
5183330	72582	67	19
5183704	72582	33	39
5183994	72582	33	
5184484	72582	75	18
5184530	72582	13	20
5184576	72582	61	35
5185154	72582	33	74
5185605	72582	33	61
5185606	72582	33	79
5186115	72582	33	33
5186313	72582	26	10
5186316	72582	5	6
5186318	72582	5	17
5186328	72582	63	25
5186329	72582	63	25
5186360	72582	61	14
5186380	72582	6	
5186380-1	72582	6	10
5186380-2	72582	6	13
5186380-3	72582	6	19
5186394	72582	18	6
5186395	72582	18	3
5186396	72582	7	24
5186428	72582	5	
	72582	38	6
5186429	72582	5	3
5186439	72582	10	7
5186440	72582	10	7
5186459	72582	5	17
5186460	72582	5	13
	72582	38	5
5186476	72582	27	
5186570	72582	26	15
5186571	72582	26	14
5186572	72582	26	16
5186574	72582	26	19
5186575	72582	26	12
5186576	72582	26	12
5186577	72582	67	18
5186579	72582	67	17
5186858	72582	66	17
5187308	72582	3	7
	72582	36	7
5187309	72582	3	4
	72582	36	4
5187310	72582	3	5
	72582	36	5
5188030	72582	64	9
5188273	72582	2	20
5188405	72582	73	3
5188406	72582	73	5
5188439	72582	41	5

Reference No.	Mfr Code	Fig No.	Item No.
5188611	72582	33	64
5188730	72582	62	3
5188868	72582	73	8
5188955	72582	43	5
5189041	72582	26	18
5189054	72582	73	2
5189542	72582	62	1
5189847	72582	1	3
5191238	72582	63	6
5192108	72582	71	
5192142	72582	44	7
5192150	72582	44	36
5192157	72582	45	5
5192176	72582	44	18
5192234	72582	34	34
5192251	72582	44	40
5192268	72582	42	36
5192273	72582	42	16
	72582	42	19
5192288	72582	42	29
5192289	72582	62	2
5192296	72582	62	23
5192358	72582	45	9
5192414	72582	44	5
5192415	72582	45	
5192466	72582	45	6
5192486	72582	61	2
5192487	72582	44	41
5192488	72582	44	33
5192489	72582	44	32
5192490	72582	44	31
5192491	72582	44	3
5192637	72582	44	4
5192751	72582	5	
5192754	72582	34	
5192796	24617	1	
5192801	72582	34	
5192874	72582	6	7
5192895	72582	74	
5193135	72582	73	
5193145	72582	42	21
5193184	72582	42	15
5193197	72582	42	22
5193251	72582	67	7
5193414	72582	44	28
5193417	72582	44	10
5193420	72582	44	21
5193421	72582	44	19
5193422	72582	44	20
5193436	72582	44	8
	72582	42	14
5193476	72582	42	20
5193477	72582	35	17
5193551	72582	73	
	72582	27	31
5193552	72582	28	11
5193553	72582	28	21
5193554	72582	28	30
5193555	72582	28	29
5193556	72582	28	7
5193562	72582	28	28
5193563	72582	28	8
5193564	72582	28	27
5193567	72582	28	24
5193569	72582	28	25
5193590	72582	28	17
5193592	72582	27	18
5193593	72582	27	15
5193597	72582	27	26
5193598	72582	27	22
5193599	72582	27	21
5193603	72582	27	20
5193605	72582	27	8
5193667	72582	26	
5193668	72582	28	26
5193675	72582	28	23
5193676	72582	27	19
5193694	72582	28	22
5193695	72582	6	4
5193697	72582	6	21
5193698	72582	7	13
	72582	7	12

Reference No.	Mfr Code	Fig No.	Item No.
5193702	72582	7	20
5193704	72582	7	14
5193705	72582	7	18
5193707	72582	7	16
5193708	72582	6	17
5193709	72582	6	18
5193710	72582	6	3
5193719	72582	34	14
	72582	34	42
5193753	72582	39	
	72582	62	
5193852	72582	6	6
5194048	72582	6	20
5194139	72582	44	17
5194140	72582	44	9
5194464	72582	64	
5194496	72582	73	1
5194567	72582	27	3
	72582	28	5
5194801	72582	72	
5194860	72582	28	
5194905	72582	42	11
5194906	72582	42	30
5194912	72582	42	18
5194913	72582	42	27
5194914	72582	42	23
5194918	72582	42	25
5194920	72582	42	13
5194931	72582	42	11
5194932	72582	42	30
5195019	72582	27	16
5195020	72582	27	12
5195101	72582	28	15
5195150	72582	75	1
5195199	72582	42	17
5195220	72582	66	21
5195411	72582	28	32
5195508	72582	42	28
5195527	72582	16	16
5195532	72582	16	16
5196022	72582	68	35
5196038	72582	42	35
5196039	72582	42	12
5196314	72582	35	23
5196393	72582	3	1
5196444	72582	44	27
5196573	72582	26	19
5196585	72582	27	7
5196629	72582	27	25
5196634	72582	7	15
5196638	72582	7	21
5196639	72582	7	1
5196640	72582	7	10
5196696	72582	27	23
	72582	27	24
5196715	72582	44	22
5196866	72582	44	14
5197226	72582	27	
	72582	28	
5197227	72582	27	
5197888	72582	45	
5197889	72582	44	16
5197890	72582	44	11
5198217	72582	67	21
5198307	72582	26	
5198318	72582	13	
5198419	72582	28	19
5198658	72582	44	
5198993	72582	45	
5198994	72582	44	6
5198995	72582	44	15
5199161	72582	13	
52HS	66295	162	30
	66295	163	9
5226029	72582	5	23
	72582	40	18
5226186	72582	15	26
5226393	72582	15	16
5226400	72582	15	18
5226411	72582	15	13
5226413	72582	15	24
5226414	72582	15	25

Section IV. INDEX-FEDERAL STOCK NUMBER AND REFERENCE NUMBER CROSS-REFERENCE TO FIGURE AND ITEM NUMBER

Reference No.	Mfg Code	Fig No.	Item No.
5226415	72582	15	27
5226416	72582	15	23
5226564	72582	15	5
5226567	72582	15	17
5226719	72582	15	22
5226912	72582	15	29
5227210	72582	15	10
5227318	72582	15	11
5227931	72582	15	30
5228102	72582	15	4
5228104	72582	15	20
5228106	72582	15	8
5228109	72582	15	6
5228292	72582	15	21
5228294	72582	15	12
5228304	72582	15	15
5228305	72582	15	
5228308	72582	15	9
5228312	72582	15	
5228316	72582	15	7
5228554	72582	15	14
5228587	72582	15	28
5228608	72582	15	19
5228701	72582	15	
5230007	72582	13	17
5245	96151	98	2
5246-1	96151	98	8
5246-2	96151	98	8
526	46576	158	15
5260-1	96151	98	7
5260-2	96151	98	7
5265	56730	139	42
5282897	72582	5	28
534	86376	84	31
5365	96151	99	16
541	86376	85	26
	86376	85	27
55Y	81900	25	10
55504X1C	43334	27	14
	43334	28	18
55606L1C	43334	65	1
5570480	70040	36	10
	72582	3	10
5571024	70040	36	12
	72582	3	12
5572799	72582	3	8
5574008	72582	3	9
5574130	72582	36	8
5574252	72582	37	6
5574906	72582	36	9
5574978	72582	36	11
5575086	70040	36	15
	72582	3	15
5701-1-1-4INN	63686	122	2
5706	79470	51	44
5711	63686	123	29
5713	63686	102	18
	63686	103	12
57191X3-4IN	63686	51	36
5740	63686	123	31
5740-1-2IN	63686	123	18
57403-4IN	63686	51	38
5881	62983	105	16
591	89617	96	14
591RED	89617	156	16
594	96151	99	21
594211	21450	78	74
596330	72582	33	
599	86376	84	34
6-5TR8TXS	08752	49	51
6-6F8TXS	08752	49	52
6C-160	59158	162	8
60SA08-12	30327	100	6
	30327	118	
60SA20X20	30327	118	37
60SA24X24	30327	118	20
60SG12-12	30327	100	18
	30327	118	40
60SG20X20	30327	118	28
60SG24X24	30327	118	29
6CTG20X20	30327	118	27
60UA08X12	30327	118	50

Reference No.	Mfg Code	Fig No.	Item No.
60UA08-12	30327	100	16
60UA16X16	30327	118	13
60UA20X20	30327	118	24
60UG24-24	30327	100	5
60UG24X24	30327	118	21
600	14959	120	8
	14959	120	31
604-1-1-2	14959	161	23
606-2	14959	161	5
609	96151	99	20
6111	76122	165	21
6147605	72582	61	24
6209	52676	126	5
6216	52676	127	38
6227-11	47296	145	12
6227-14	47296	145	13
623-11278	16954	130	19
6246-11	47296	145	14
6246-15	47296	146	16
627	14499	19	11
630	14959	20	39
63103-3	81321	9	9
63108-3	81321	9	
6318	52676	127	34
6402505	72582	93	12
6402506	72582	93	11
6460283	72582	93	14
6460464	72582	93	15
6505014	72582	55	49
6505025	72582	55	33
	72582	55	37
6525050	72582	55	20
6525054	72582	55	27
6525055	72582	55	25
6525056	72582	55	16
6525060	72582	55	31
	72582	55	36
6525061	72582	55	45
6525062	72582	55	41
6525063	72582	55	47
6525065	72582	55	15
	72582	55	18
6525066	72582	55	11
6525070	72582	55	48
6525071	72582	55	32
	72582	55	34
	72582	55	38
6525072	72582	55	46
6525073	72582	55	8
6525075	72582	55	21
6525076	72582	55	23
6525078	72582	55	44
6525079	72582	55	40
6525102	72582	55	42
6525195	72582	55	26
	72582	55	39
6525302	72582	55	43
6526057	72582	55	17
66	72671	157	12
6668337	81321	9	8
667	86376	85	9
6700119	72582	62	15
6700169	72582	62	9
6700173	72582	40	8
6700181	72582	40	11
6700213	72582	62	
6700216	72582	62	
6700217	72582	62	
6700233	72582	40	12
6700315	72582	40	29
6700509	72582	62	24
6700545	72582	62	22
6700846	72582	40	13
6700902	72582	62	7
6701049	72582	62	16
6701066	72582	62	11
6701070	72582	62	21
6701081	72582	62	
6701082	72582	62	
6701090	72582	62	
6701093	72582	62	6
	72582	62	18

Section IV. INDEX-FEDERAL STOCK NUMBER AND REFERENCE NUMBER CROSS-REFERENCE TO FIGURE AND ITEM NUMBER

Reference No.	Mfg Code	Fig No.	Item No.
6701096	72582	62	10
	72582	62	12
6702351	72582	62	
6702989	72582	62	8
670998	72582	62	
671-00146	16954	130	14
671-00246	16954	130	15
671-00248	16954	130	3
6750772	72582	62	13
6751008	72582	62	19
6751597	72582	62	20
6751912	72582	62	
6751913	72582	62	
6754554	72582	62	
6756882	72582	62	
6770522	72582	62	14
694203	72582	7	11
7-45	31211	46	4
7-49	31211	46	5
70W	24161	23	15
701-1	05381	93	8
702	14959	159	9
7076	62983	142	15
7078	62983	39	1
708	07988	129	1
709	07988	129	7
710	07988	129	4
711-1225	C7988	129	5
712	07988	129	8
712262	18877	51	35
7182621	18877	64	
7194	63686	103	11
72	72582	64	5185
72-14-229	26571	119	14
72-24-229	26571	119	3
72-6-229	26571	119	1
72-7-229	26571	119	2
72A26-229	26571	119	4
72A27-229	26571	119	5
72A33-229	26571	119	6
72A34-229	26571	119	7
72A41-229	26571	119	8
72A42-229	26571	119	9
72B51-229	26571	119	10
73005	85925	93	10
7310D	85925	93	13
7335	81321	8	9
7340-1-21N	63686	123	4
7411745	19207	23	41
7451054	72582	34	12
7451142	72582	69	8
74877A	00742	162	
7494	81321	8	10
75W	24161	23	24
752	31998	10	12
757	48422	163	1
76W	24161	21	4
	24161	21	6
	24161	21	10
	24161	21	14
7649765	19207	40	19
77-10-206	26571	50	3
77-8-206	26571	50	2
77A44-206	26571	50	5
77B45-206	26571	50	6
7818-0133	24161	46	4
79NE080	17224	97	7
8-214N300-9	83259	126	
8-342N300-9	9832	126	
8FC24	97418	88	
8SA3006P	31211	46	
802696	16764	48	
811912	16764	47	10
	16764	47	46
81413-8	14559	19	8
815F1197120SYMBOL1	80064	91	1
819E	14959	120	6
82-20007-01	24785	111	5
82-20210-01	24785	111	7
82-20216-01	24785	110	2
82-20220-01	24785	143	3
822	07988	129	3

Reference No.	Mfg Code	Fig No.	Item No.
82262	91940	148	5
82266	91940	148	8
82800	62983	142	14
8290K16	97418	89	1
83-11247-03	24785	111	14
83-15083-05	24785	143	1
83-16604-01	24785	111	24
838	96151	99	22
838029	72582	67	3
839	96151	99	23
84-01311-03	24785	111	3
84-01312-02	24785	144	6
84-01342-05	24785	110	10
8414418	16764	47	9
844	96151	99	1
8444K3	27193	90	4
846	96151	99	5
846430	72582	41	
847K	96151	99	7
849	96151	99	13
850	96151	99	16
8502833	72582	5	19
	72582	38	13
850901	72582	18	26
857	96151	99	12
8575-1	26196	116	5
8575-11	26196	116	6
8575-2	26196	116	3
8575-3	26196	116	7
8575-4	26196	116	8
8575-5C	26196	116	9
8575-6	26196	116	4
8575-9	26196	116	2
8575T	26196	116	1
8575TNON	26196	117	3
859	96151	99	10
8658-11	91940	148	4
8658-15	91940	148	6
8724752	19207	161	27
8901	81321	9	1
9-5-5478L	80064	93	1
9S4718L	80064	96	1
9000S620-74207	80064	92	8
9000S6202-74026	80064	92	1
9000S6202-74026APC	80064	92	7
9000S6202-74031PC1	80064	92	6
9000S6202-74427	80064	92	3
9000S6202F74018	80064	169	8
903200	72582	55	24
903214	72582	61	16
	72582	61	18
907084	72582	64	4
908730	05169	141	
912008	62983	106	9
912031	62983	105	10
912056	62983	106	
912056L	62983	106	
912064	62983	105	
91415	62983	106	4
922732	62983	105	
922793	62983	106	
922851	62983	125	
922926	62983	138	
922927	62983	139	
923023	62983	124	
923023L	62983	124	
925257	62983	142	
9402711	72582	3	
9409028	72582	63	24
9409079	72582	72	48
9409961	72582	5	
	72582	75	11
9411504	72582	55	30
9411631	72582	64	1
9413509	16764	47	7
	16764	47	40
9414418	16764	47	42
9415285	72582	28	16
9416358	72582	27	13
9417889	72582	72	13
9421423	16764	47	3
	16764	47	26

Section IV. INDEX-FEDERAL STOCK NUMBER AND REFERENCE NUMBER CROSS-REFERENCE TO FIGURE AND ITEM NUMBER

Reference No.	Mfr Code	Fig No.	Item No.	Reference No.	Mfr Code	Fig No.	Item No.
9421427	16764	47	8				
	16764	47	41				
9421917	72582	33	56				
948-2IN	48422	23	37				
9504-08	19738	117	8				
9505-10	19738	95	7				
954418	72582	34	39				
954496	72582	61	36				
954498	72582	55	19				
559-2IN	94026	22	12				
96168	62983	124	4				
98306A	39428	97	8				
9E574	62983	105	17				
	62983	106	13				
9872-356	52660	154	18				
9SNE1C8	72922	30	10				
99507	43334	130	24				
9955	62983	124	3				
9S88851-2	18876	139	38				

By Order of the Secretary of the Army:

CREIGHTON W. ABRAMS
General, United States Army
Chief of Staff

Official:

VERNE L. BOWERS
Major General, United States Army
The Adjutant General

Distribution:
To be distributed in accordance with DA Form 12-25D (qty rqr block no. 815)
Direct and General Support Maintenance requirements for Marine: All.

* U. S. GOVERNMENT PRINTING OFFICE:1989-242-466:08282